SOUTH CAROLINA EDUCATION LOTTERY

4TH FLOOR UPFIT

SOUTH CAROLINA EDUCATION LOTTERY PROJECT NUMBER: Y20-N001-CB
SSOE | S&W PROJECT NUMBER: 021-00531-00

SSOE | STEVENS & WILKINSON

PROFESSIONAL SEALS:

SOUTH CAROLINA — SSOE, INC No. 746 — CERTIFICATE OF AUTHORIZATION

STATE OF SOUTH CAROLINA — WILLIAM J. FLEMING — Columbia, SC — No. 3452 — REGISTERED ARCHITECT

8-6-2021

SUBMITTAL/REVISION SCHEDULE:

NO.	DATE	DESCRIPTION
	8.06.2021	CONSTRUCTION DOCUMENTS

■ APPROVED FOR CONSTRUCTION
☐ NOT APPROVED FOR CONSTRUCTION

CLIENT INFORMATION:

SOUTH CAROLINA EDUCATION LOTTERY

CLIENT PROJECT #:	20048.00
SCEL PROJECT #:	Y20-N001-CB

PROJECT INFORMATION:

4TH FLOOR UPFIT

1333 MAIN STREET, COLUMBIA, SOUTH CAROLINA

SSOE/SW PROJECT #:	021-00531-00
SSOE/SW MANAGER:	BILL FLEMING

SSOE | STEVENS & WILKINSON
1501 Main Street, Suite 730
Columbia, SC 29201
T. (803) 765-0320

THIS DRAWING IS THE PROPERTY OF SSOE | STEVENS & WILKINSON. UNAUTHORIZED USE OF ANY KIND, INCLUDING USE ON OTHER PROJECTS, IS PROHIBITED.
© SSOE, INC. 2021

COVER SHEET

G1.00

C:\Autodesk\Revit\2004800 - Arch - SC Education Lottery Upfit - Adjusted Scope - V19.2_lbajarias@ssoe.com.rvt :FILE PATH
10/20/2021 3:05:37 PM :PRINT DATE

ABBREVIATIONS LEGEND

A

AB	ANCHOR BOLT
AC	AIR CONDITIONING
ACC	ACCESSIBLE
ACOUS	ACOUSTICAL
AD	AREA DRAIN
ADA	AMERICANS W/ DISABILITIES ACT
ADD	ADDITIONAL
ADJ	ADJUSTABLE
AFF	ABOVE FINISH FLOOR
AFG	ABOVE FINISH GRADE
AGGR	AGGREGATE
ALT	ALTERNATE
ALUM	ALUMINUM
ANNO	ANODIZED
APC	ACOUSTICAL PANEL CEILING
APPD	APPROVED
APPROX	APPROXIMATE(LY)
ARCH	ARCHITECTURAL
ASPH	ASPHALT
ATC	ACOUSTICAL TILE CEILING
AUTO	AUTOMATIC
AV	AUDIO VISUAL

B

BEJ	BRICK EXPANSION JOINT
BD	BOARD
BLKG	BLOCKING
BLDG	BUILDING
BFF	BETWEEN FINISH FACES
B.M.	BENCH MARK
BOT	BOTTOM
B.R.	BUMPER RAIL
BSMT	BASEMENT
BUR	BUILT UP ROOF
B/W	BETWEEN

C

CAB	CABINET
CAT	CATEGORY
CB	CATCH BASIN
CBU	CEMENTITIOUS BACKER UNIT
CC	CENTER TO CENTER
CER	CERAMIC
CFCI	CONTRACTOR FURNISHED, CONTRACTOR INSTALLED
CFOI	CONTRACTOR FURNISHED, OWNER INSTALLED
C.G.	CORNER GUARD
CHAN	CHANNEL
C.I.	CAST IRON
CIP	CAST-IN-PLACE
CJ	CONTROL JOINT (CONSTRUCTION JOINT)
C.L.	CENTER LINE
CLG	CEILING
CLK BD	CHALK BOARD
CLR	CLEAR
CMU	CONCRETE MASONRY UNIT
CNTR	COUNTER
C.O.	CLEAN OUT
COL	COLUMN
CONC	CONCRETE
CONT	CONTINUOUS
COORD	COORDINATION
CORR	CORRIDOR
CR	CARD READER
CR-X	CARD READER A, B, C, ETC
CPT	CARPET
CT	CERAMIC TILE
CT	COOLING TOWER
CTR	CENTER
CTSK	COUNTERSUNK
CW	COLD WATER (PIPING)

D

D	DEEP
D.A.	DOUBLE ACTING
DBL	DOUBLE
DEG	DEGREE
DEMO	DEMOLITION
DEPT	DEPARTMENT
DETL	DETAIL
DF	DRINKING FOUNTAIN
DIA	DIAMETER
DIFF	DIFFUSER
DIM	DIMENSION
DIS	DISABLED
DISP	DISPENSER
DMPF	DAMPPROOFING
DMS	DOOR MONITORING SWITCH
DMT	DEMOUNTABLE
D.O.	DOOR OPENING
D.P.	DIMENSION POINT
DPTN	DEMOUNTABLE PARTITION
DR	DOOR
DRN	DRAIN
DS	DOWNSPOUT
DW	DISHWASHER
DWG	DRAWING
DWR	DRAWER

E

EA	EACH
E.B.	EXPANSION BOLT
EIFS	EXTERIOR INSULATION AND FINISH SYSTEM
EFS	EXTERIOR FINISH SYSTEM
EJ	EXPANSION JOINT
EL	ELECTRIC LATCH RETRACTION
ELEC	ELECTRICAL
ELEV	ELEVATION
ELVTR	ELEVATOR
EMERG	EMERGENCY
ENCLO	ENCLOSURE
E.P.	ELECTRICAL PANELBOARD
EQ	EQUAL
EQUIP	EQUIPMENT
ESCAL	ESCALATOR
EPDM	SINGLE PLY ROOF
EWC	ELECTRIC WATER COOLER
EXH	EXHAUST
EXIST	EXISTING
EXP	EXPANSION
EXP JT	EXPANSION JOINT
EXT STF	EXTERIOR STOREFRONT
EXT	EXTERIOR

F

FA	FIRE ALARM
FB	FACE BRICK
F.C.	FURRED CEILING
F.D.	FLOOR DRAIN
FDC	FIRE DEPARTMENT CONNECTION
FE	FIRE EXTINGUISHER
FEC	FIRE EXTINGUISHER CABINET
FF	FACTORY FINISH
F.F.L.	FINISHED FLOOR LINES
F.F.E.	FINISHED FLOOR ELEVATION
FF&E	FURNITURE, FINISHES & EQUIPMENT
F.H.	FLAT HEAD
F.H.C.	FIRE HOSE CABINET
FIN	FINISHED
FIXT	FIXTURE
FL	FLOOR
FLASH	FLASHING
FLG	FLOORING
FLUOR	FLUORESCENT
FND	FOUNDATION
F.O.F.	FACE OF FINISH
F.O.M.	FACE OF MASONRY
F.O.S.	FACE OF STUD
FP	FIRE PROTECTION
FR	FRAME
FPG	FIREPROOFING
FRTW	FIRE RETARDANT TREATED WOOD
FT	FEET
FTG	FOOTING
FURN	FURNITURE
FURR	FURRING
FV	FIELD VERIFY
FWC	FABRIC WALLCOVERING
FWP	FABRIC WRAPPED PANEL

G

GA	GAUGE
GALV	GALVANIZED
G.B.	GRAB BAR
GC	GENERAL CONTRACTOR
GFRC	GLASS FIBER REINFORCED CONCRETE
GFRG	GLASS FIBER REINFORCED GYPSUM
GL	GLASS
GL BLK	GLASS BLOCK
GWB	GYPSUM WALL BOARD
GYP	GYPSUM

H

H	HIGH
HB	HOSE BIB
HCW	HOLLOW CORE WOOD
HC	HANDICAPPED
HDW	HARDWARE
HDWD	HARDWOOD
HGT	HEIGHT
HM	HOLLOW METAL
HNDRL	HANDRAIL
H.O.	HOLD OPEN
HORZ	HORIZONTAL
HRC	HOSE REEL CABINET
HR	HOUR
HS	HEAT STRENGTH (GLASS)
HVAC	HEATING, VENTILATION AND AIR CONDITIONING
HW	HOT WATER
HWH	HOT WATER HEATER
HYDR	HYDRAULIC

I

IBC	INTERNATIONAL BUILDING CODE
ID	INSIDE DIAMETER
IN	INCH
INCAND	INCANDESCENT
INCL	INCLUDED (INCLUDING)
INFO	INFORMATION
INSUL	INSULATION
INT	INTERIOR
INT STF	INTERIOR STOREFRONT
INTERM	INTERMEDIATE
INV	INVERT (INVERSE)
IPS	INTERNATIONAL PIPE STANDARD
IRMA	INVERTED ROOF MEMBRANE

J

JAN CLO	JANITOR CLOSET
J-BOX	JUNCTION BOX
JST	JOIST
JT	JOINT

K

K	KIP (1000 LBF)
K.D.	KNOCKED DOWN
KG	KILOGRAM
KIT	KITCHEN
K.O.	KNOCKOUT
KPL	KICK PLATE

L

L	LONG
LAB	LABORATORY
LAHJ	LOCAL AUTHORITY HAVING JURISDICTION
LAM	LAMINATE (LAMINATION)
LAU	LAUNDRY
LAV	LAVATORY
LB	POUND
LD	LEADER
LDG	LANDING
LEV	LEVEL
LF	LINEAR FOOT
LGT	LIGHT
LKR	LOCKER
LLH	LONG LEG HORIZONTAL
LLV	LONG LEG VERTICAL
LN	LINE
LS	LIMESTONE
LV	LOUVER
LWC	LIGHTWEIGHT CONCRETE

M

M	METER
MACH	MACHINE
MAINT	MAINTENANCE
MAS	MASONRY
MATL	MATERIAL
MAX	MAXIMUM
M.B.	MACHINE BOLT
MBL	MARBLE
M.C.	MAIL CHUTE
MDF	MEDIUM DENSITY FIBERBOARD
MDO	MEDIUM DENSITY OVERLAY
MECH	MECHANICAL
MED CAB	MEDICINE CABINET
MEMB	MEMBRANE
MEP	MECHANICAL, ELECTRICAL, PLUMBING
MEZZ	MEZZANINE
MFR	MANUFACTURER
MH	MANHOLE
MHO	MAGNETIC HOLD OPEN DEVICE
MIN	MINIMUM
MISC	MISCELLANEOUS
ML	MAGNETIC LOCK
MM	MILLIMETER
M.O.	MASONRY OPENING
MOV PART	MOVING PARTITION
M.S.	MACHINE SCREW
M.S.L.	MEAN SEA LEVEL
MTD	MOUNTED
MTG	MOUNTING
MTL	METAL
MULL	MULLION

N

N	NORTH
N/A	NOT APPLICABLE
NC	NOISE CRITERIA
NECC	NATIONAL ENERGY CONSERVATION CODE
NEC	NATIONAL ELECTRICAL CODE
NFPA	NATIONAL FIRE PROTECTION ASSOCIATION
NIC	NOT IN CONTRACT
NO	NUMBER
NOM	NOMINAL
NTS	NOT TO SCALE

O

OA	OUTSIDE AIR
OC	ON CENTER
OCEW	ON CENTER EACH WAY
O.D.	OUTSIDE DIAMETER/DIMENSION
OFCI	OWNER FURNISHED, CONTRACTOR INSTALLED
OFF	OFFICE
OFOI	OWNER FURNISHED, OWNER INSTALLED
OH	OPPOSITE HAND
OPNG	OPENING
OPP	OPPOSITE
ORD	OVERFLOW ROOF DRAIN
OUTS	OUTSIDE
OVHD	OVERHEAD

P

PAV	PAVING
PARTN	PARTITION
PATD	PAPER TOWEL DISPENSER
PBD	PARTICLEBOARD
P.C.	PRECAST CONCRETE
PDF	POWER DRIVE FASTENER
PDO	POWER DOOR OPERATOR
PERF	PERFORATED
PERIM	PERIMETER
PERP	PERPENDICULAR
PF	POINT OF INTERSECTION
PL	PLATE
PLAM	PLASTIC LAMINATE
PLAS	PLASTER
PLBG	PLUMBING
PLF	POUNDS PER LINER FOOT
PLYWD	PLYWOOD
PNL	PANEL
PNT	PAINT
POL	POLISHED
PORT	PORTABLE
PR	PAIR
PRCST	PRECAST
PREFAB	PREFABRICATED
PROJ	PROJECT
PSF	POUNDS PER SQUARE FOOT
PT	PORCELAIN TILE/ PAVER TILE
PTD	PAINTED
PTN	PARTITION
PTR	PAPER TOWEL RECEPTACLE

Q

QT	QUARRY TILE
QTY	QUANTITY

R

R	RADIUS
RA	RETURN AIR
RAD	RADIUS
RB	RUBBER BASE (RESILIENT BASE)
RCP	REFLECTED CEILING PLAN
R.D.	ROOF DRAIN
REC	RECESSED
RECOM	RECOMMENDED
RECPT	RECEPTACLE
REF	REFERENCE
REFL	REFLECTIVE
REFRG	REFRIGERATOR
REG	REGISTER
REINF	REINFORCING
REL	RELOCATE
REM	REMOVABLE
REQ	REQUIRED /REQUIRED
RESIL	RESILIENT
REV	REVISION
RF	ROOF
RM	ROOM
R.O.	ROUGH OPENING
RTD	RATED
RTG	RATING
RUB	RUBBER
RWL	RAIN WATER LEADER
RX	REQUEST TO EXIT SWITCH

S

S	SOUTH
SA	SUPPLY AIR
SAN	SANITARY
SB	SPLASHBLOCK
SCUP	SCUPPER
S.C.	SOLID CORE
SCHED	SCHEDULE
SCW	SOLID CORE WOOD
SD	STORM DRAIN
SD	SOAP DISPENSER
SECT	SECTION
SF	SQUARE FEET / SQUARE FOOT
SH	SPRINKLER HEAD
SHTHG	SHEATHING
SHT	SHEET
SHR	SHOWER
SIM	SIMILAR
S.M.	SHEET METAL
SND	SANITARY NAPKIN DISPENSER
SP	STANDPIPE
SPEC	SPECIFICATION
SPR	SPRINKLER
SPKR	SPEAKER
SQ	SQUARE
SQ FT	SQUARE FOOT
SF	SQUARE FOOT
SS	STAINLESS STEEL
SSE	STRUCTURE SLAB ELEVATION
SST	STAINLESS STEEL
SSK	SERVICE SINK
STA	STATION
ST	STREET
STD	STANDARD
STL	STEEL
STL JST	STEEL JOIST
STL ST	STAINLESS STEEL
STN	STAINED
STS	SELF TAP METAL SCREW
STOR	STORAGE
STRL	STRUCTURAL
STRUC	STRUCTURAL
STS	SELF TAP METAL SCREW
SUBCAT	SUBCATEGORY
SUSP	SUSPENDED
SYMM	SYMMETRICAL
SYS	SYSTEM

T

T	THERMOSTAT
TB	TOWEL BAR
T.C.	TOP OF CURB
TEL	TELEPHONE
TEMP	TEMPERATURE
TER	TERRAZZO
TFF	TO FINISH FACE
TGB	TOGGLE BOLT
THK	THICK/THICKNESS
THRES	THRESHOLD
THRU	THROUGH
TKBD	TACKBOARD
TLT	TOILET
TMPD	TEMPERED
T.O.	TOP OF
T.O.P.	TOP OF PARAPET
T.O.M.	TOP OF MASONRY
T.O.C.	TOP OF CMU
T.O. CONC	TOP OF CONCRETE
T.O.S.	TOP OF SLAB
T.O.STL	TOP OF STEEL
T.O.W.	TOP OF WALL
TPD	TOILET PAPER DISPENSER
TRACT	TRACTION
TRT	TREATED
TV	TELEVISION
T.W.	TOP OF WALL
TYP	TYPICAL

U

UL	UNDERWRITER'S LABORATORY
UNFIN	UNFINISHED
U.O.N.	UNLESS OTHERWISE NOTED
U.N.O.	UNLESS NOTED OTHERWISE
UR	URINAL

V

VAC	VENTILATION AND AIR CONDITIONING
VAC	VACUUM
V.B.	VAPOR BARRIER
VCT	VINYL COMPOSITION TILE
VERT	VERTICAL
VEST	VESTIBULE
VIF	VERIFY IN FIELD
VT	VINYL TILE
VR	VAPOR RETARDER
VWC	VINYL WALL COVERING

W

W	WIDE
W/	WITH
W/O	WITHOUT
WAT HTR	WATER HEATER
WC	WATER CLOSET
WD	WOOD
WDS	WOOD SCREW
WD DR	WOOD DOOR
WDW	WINDOW
W.F.	WIDE FLANGE STEEL
WGT	WEIGHT
W.GL	WIRE GLASS
W.H	WEEP HOLE
W.I.	WROUGHT IRON
WIN	WINDOW
W.L.	WATER LINE
WP	WATERPROOFING
WPM	WATERPROOFING MEMBRANE
WPT	WORK POINT
WR	WATER RESISTANT/REPELLANT
WS	WEATHERSTRIPPING
WSCT	WAINSCOT
W.W.	WALL TO WALL
W.W.M.	WELDED WIRE MESH

GENERAL NOTES

1. THE CONTRACT DOCUMENTS CONSIST OF THIS SET OF DRAWINGS, THE PROJECT MANUAL, ADDENDA, CONSTRUCTION CHANGE DIRECTIVES, CHANGE ORDERS, THE CONTRACT BETWEEN THE OWNER AND THE CONTRACTOR, CONDITIONS OF THE CONTRACT AND ANY OTHER INFORMATION WRITTEN AND MUTUALLY AGREED UPON BETWEEN THE OWNER AND THE CONTRACTOR.
2. THIS SET OF DRAWINGS HAS AN ACCOMPANYING PROJECT MANUAL, WHICH IS AN INTEGRAL PART OF THE CONTRACT DOCUMENTS. ALL ASPECTS OF THESE DRAWINGS ARE DEPEND ON THE INFORMATION CONTAINED THEREIN.
3. THESE DRAWINGS ARE COMPLEMENTARY AND INTERRELATED: WORK OF ANY INDIVIDUAL TRADE IS NOT NECESSARILY CONFINED TO SPECIFIC DOCUMENTS, CHAPTERS OR LOCATIONS.
4. NOTES AND DETAILS ON DRAWINGS SHALL TAKE PRECEDENCE OVER GENERAL NOTES AND TYPICAL DETAILS.
5. WHERE DETAILS ARE SHOWN ON ARCHITECTURAL DRAWINGS FOR ONE CONDITION, IT SHALL APPLY TO ALL SIMILAR OR LIKE CONDITIONS, UNLESS NOTED OR SHOWN OTHERWISE ON THE PLANS.
6. APPROVED PLANS SHALL BE KEPT IN A PLAN BOX AND SHALL NOT BE USED BY WORKMEN. ALL CONSTRUCTION SETS SHALL REFLECT THE SAME INFORMATION. THE CONTRACTOR SHALL ALSO MAINTAIN, IN GOOD CONDITION, ONE COMPLETE SET OF DRAWINGS WITH ALL REVISIONS, ADDENDA AND CHANGE ORDERS ON THE PREMISES AT ALL TIMES. THERE ARE TO BE UNDER THE CARE OF THE JOB SUPERINTENDENT.
7. CONTRACTOR SHALL COORDINATE ALL CIVIL DOCUMENTS INCLUDED IN THIS SET WITH EXISTING SITEWORK CONDITIONS AND REPORT ANY DISCREPANCIES IN THE DOCUMENTS TO THE ARCHITECT.
8. IF DISCREPANCIES OR INCONSISTENCIES IN THE DOCUMENTS ARE DISCOVERED, NOTIFY THE ARCHITECT IMMEDIATELY USING THE DESIGNATED "REQUEST FOR INFORMATION" PROCEDURE AS SPECIFIED IN THE PROJECT MANUAL.
9. ALL DIMENSIONS TO TAKE PRECEDENCE OVER SCALE SHOWN ON PLANS, SECTIONS AND DETAILS.
10. DO NOT SCALE THE DRAWINGS; USE DIMENSIONS ONLY. NOTIFY ARCHITECT OF SIGNIFICANT DISCREPANCIES IMMEDIATELY UPON DISCOVERY.
11. THESE DOCUMENTS MAY CONTAIN 3-D AXON AND AERIAL IMAGES FOR PROJECT ORIENTATION. THESE IMAGES MAY NOT ACCURATELY REFLECT ALL PROVISION OF THE CONTRACT DOCUMENTS. THESE IMAGES ARE ARTISTIC IN NATURE AND DO NOT TAKE PRECEDENCE OVER NOTES, DIMENSION OR DETAILS SHOWN AT THESE DOCUMENTS.
12. IT IS THE INTENT OF THE CONTRACT DOCUMENT TO COMPLY WITH ALL CODES AND ORDINANCES IN EFFECT AT THE TIME THE PERMIT IS ISSUED. NOTIFY ARCHITECT IMMEDIATELY UPON DISCOVERY OF SUSPECTED DEVIATION.
13. ALL UL AND ASTM STANDARDS NOTED ON THESE DRAWINGS SHALL BE OF THE LATEST REVISION UNLESS NOTED OTHERWISE.
14. EQUIVALENT MATERIALS SUBSTITUTED AS PER "APPROVED EQUAL" NOTE SHALL BE APPROVED BY THE ARCHITECT/ENGINEER OF RECORD BEFORE ACCEPTANCE OF BID BY GENERAL CONTRACTOR. ANY MATERIAL DESIGNATED WITH A BRAND NAME MAY BE SUBSTITUTED WITH IT'S EQUAL IF THE SO CALLED EQUIVALENT IS FIRST APPROVED BY THE ARCHITECT/ENGINEER. THE CONTRACTOR SHALL SUPPLY INFORMATION AS REQUESTED TO VERIFY MATERIAL IS EQUAL TO SPECIFIED MATERIAL. SEE SPECIFICATIONS FOR APPROPRIATE PROTOCOLS FOR REVIEW OF SUBSTITUTION REQUESTS.
15. REVIEW OF SUBMITTALS AND/OR SHOP DRAWINGS BY THE ARCHITECT/ENGINEER OF RECORD DOES NOT RELIEVE THE CONTRACTOR OF THE SOLE RESPONSIBILITY TO REVIEW AND CHECK SHOP DRAWINGS BEFORE SUBMITTAL TO THE ARCHITECT/ENGINEER OF RECORD. THE CONTRACTOR REMAINS SOLELY RESPONSIBLE FOR ERRORS AND OMISSIONS ASSOCIATED WITH THE PREPARATION OF SHOP DRAWINGS AS THEY PERTAIN TO MEMBER SIZES, DETAILS, AND DIMENSIONS SPECIFIED IN THE CONTRACT DOCUMENTS. CONTRACTOR SHALL ALSO BE RESPONSIBLE FOR MEANS, METHODS, TECHNIQUES, SEQUENCES, AND PROCEDURES OF CONSTRUCTION. SEE SPECIFIC PROVISIONS IN THE CONTRACT DOCUMENTS SPECIFICATIONS DEALING WITH THE APPROPRIATE DESIGN RESPONSIBILITIES OF CONTRACTORS, SUBCONTRACTORS AND SUPPLIERS.
16. CONTRACTOR SHALL PROVIDE PROJECT SIGNAGE INCLUDING RENDERING OF BUILDING, NAME OF OWNER, ARCHITECT, ENGINEER AND MAJOR SUB-CONTRACTORS.
17. THE DESIGN OF PRE-ENGINEERED SYSTEMS SPECIFIED IN THE CONTRACT DOCUMENTS IS THE SOLE RESPONSIBILITY OF THE CONTRACTOR, SUPPLIER AND ITS DESIGN ENGINEER LICENSED IN THE PROJECT STATE. SUBMITTAL OF SUCH SYSTEMS TO THE ARCHITECT/ENGINEER OF RECORD SHALL BE REVIEWED FOR CONFORMANCE WITH THE CONTRACT DOCUMENTS WITH REGARD TO THE ARRANGEMENT AND OR SIZES OF MEMBERS SHOWN ON THE CONTRACT DOCUMENTS, AND THE SUPPLIERS INTERPRETATION OF THE DESIGN INFORMATION INCLUDED IN THE CONTRACT DOCUMENTS. SUCH REVIEW BY THE ARCHITECT/ENGINEER OF RECORD SHALL NOT IMPLY ANY RESPONSIBILITY FOR THE ACTUAL DESIGN OF SUCH SYSTEMS. THE CONTRACTOR SHALL BE RESPONSIBLE FOR DIMENSIONAL ACCURACY AND CONFORMANCE WITH THE INFORMATION CONTAINED WITHIN THE CONTRACT DOCUMENTS. SEE SPECIFIC SECTIONS OF GENERAL NOTES ABOVE AND THE SPECIFICATIONS FOR APPROPRIATE DESIGN RESPONSIBILITIES OF THE SUPPLIER AND IT'S LICENSED ENGINEER.
18. FIRE ALARM, SPRINKLER SYSTEMS, AND KITCHEN HOOD FIRE EXTINGUISHING SYSTEMS SHALL BE SUBMITTED AND APPROVED BY THE FIRE MARSHALL'S OFFICE HAVING JURISDICTION PRIOR TO INSTALLATION.
19. ALL EQUIPMENT, SPECIALTIES, FURNISHINGS AND CASEWORK INDICATED ON THE DOCUMENTS SHALL BE INCLUDED IN THE CONTRACT UNLESS SPECIFICALLY INDICATED TO NOT BE IN THE CONTRACT (N.I.C.).
20. ALL TRAILER AND/OR CONSTRUCTION OFFICES SHALL BE PERMITTED SEPARATELY FROM BUILDING PERMIT. PERMITS SHALL BE PURCHASED BY THE GENERAL CONTRACTOR FROM THE AUTHORITY HAVING JURISDICTION. THE COST OF PERMITS SHALL BE INCLUDED IN THE CONTRACT COST.
21. MECHANICAL, PLUMBING AND ELECTRICAL SUBCONTRACTORS SHALL SUBMIT AFFIDAVITS FOR EACH BUILDING PERMIT TO THE BUILDING PERMITS SECTION BEFORE REQUESTING INSPECTIONS. OBTAIN AFFIDAVITS FROM THE BUILDING PERMITS SECTION.
22. IT IS THE INTENT OF THESE DOCUMENTS THAT ALL ITEMS, EQUIPMENT, HARDWARE, CLEARANCES, MOUNTING HEIGHTS, SIGNAGE, SYSTEMS, ETC BE IN COMPLIANCE WITH THE AMERICANS WITH DISABILITIES ACT. THE GENERAL CONTRACTOR AND SUBCONTRACTORS SHALL REPORT TO THE ARCHITECT ANY DISCREPANCIES NOTED BETWEEN THE REQUIREMENTS OF THE ACT AND THE DOCUMENTS AND WAIT FOR DIRECTIONS ON THE RESOLUTION OF THE DISCREPANCIES.
23. EXTERIOR SIGNAGE LOCATIONS, NUMBER, SIGN AND DESIGN ARE NOT APPROVED UNDER THIS BUILDING PERMIT. A SEPARATE SIGN LOCATION PERMIT IS REQUIRED FOR EACH SIGN.
24. FOR REASONS OF DRAWING CLARITY, DRAWINGS DRAWN AT A SCALE GREATER THAN 1 1/2" = 1'-0" DO NOT SHOW SPRAY-ON FIREPROOFING AND MAY ALSO NOT BE SHOWN AT THESE DETAILS FOR CLARITY OF DRAWING. INSTALL FIREPROOFING ON ALL STRUCTURAL ELEMENTS AS REQUIRED BY GENERAL FIREPROOFING INFORMATION REGARDLESS OF WHETHER IT IS SHOWN IN A PARTICULAR DETAIL. SEE CODE ANALYSIS SHEETS FOR MORE INFORMATION.
25. THE CONTRACTOR IS RESPONSIBLE FOR LOCATING ALL EXISTING UTILITIES, WHETHER OR NOT THEY ARE SHOWN. CONTRACTOR SHALL PROTECT FROM DAMAGE, ALL EXISTING UTILITIES. THE CONTRACTOR SHALL BEAR THE EXPENSE OF REPAIR OR REPLACEMENT OF UTILITIES AND OTHER PROPERTY DAMAGED BY OPERATIONS IN CONJUNCTION WITH THE EXECUTION OF THE WORK.
26. THE CONTRACTOR SHALL PROVIDE ALL TEMPORARY WATER, POWER AND TOILET FACILITIES AS REQUIRED.
27. THE CONTRACTOR SHALL BE RESPONSIBLE FOR THE COMPLETE SECURITY OF THE SITE, WHILE CONSTRUCTION IS IN PROGRESS AND UNTIL JOB IS COMPLETE.
28. CONTRACTOR SHALL TAKE ALL NECESSARY PRECAUTIONS TO ENSURE THE SAFETY OF THE OCCUPANTS AND WORKERS AT ALL TIMES.
29. CONSTRUCTION TECHNIQUES, PROCEDURES, SEQUENCING AND SCHEDULING ARE SOLELY THE RESPONSIBILITY OF THE CONTRACTOR.
30. FIRE ALARM CONTRACTOR SHALL OBTAIN A FIRE ALARM SYSTEM PERMIT PRIOR TO INSTALLATION. ANY FIRE ALARM PLANS INCLUDED IN THIS SET OF PLANS ARE FOR REFERENCE ONLY. NOT FOR PERMIT.
31. FIRE SPRINKLER CONTRACTOR SHALL OBTAIN A FIRE SPRINKLER PERMIT PRIOR TO INSTALLATION. ANY FIRE SPRINKLER PLANS INCLUDED IN THIS SET OF PLANS ARE FOR REFERENCE ONLY. NOT FOR PERMIT.
32. ELEVATORS AND ESCALATORS SHALL BE DESIGNED FOLLOWING REQUIREMENTS OF ANSI/ASME A17.1. THE LIFE SAFETY CODE (CHAPTERS 7-4) IN EFFECT IN THE JURISDICTION HAVING AUTHORITY.

FIRE & SMOKE ASSEMBLIES NOTES

1. THE ANNULAR AREA OF ANY PENETRATION IN THE COMPOSITE DECK FLOOR FOR THE PASSAGE OF STEEL, FERROUS OR COPPER CONDUIT, PIPS, TUBES OR VENTS WITH A MAXIMUM NOMINAL DIAMETER OF SIX (6) INCHES SHALL BE FILLED WITH GROUT OR MORTAR FOR THE FULL THICKNESS OF THE FLOOR IN ACCORDANCE WITH IBC 712.4.1.1, EXCEPTION NO. 2.
2. INSTALL FIRE SAFING AT ALL GAPS BETWEEN FLOORS AND WALLS. INSTALL FIRE STOP SYSTEMS AND FIRE STOP SEALANT AT ALL PENETRATIONS OF RATED PARTITIONS, CEILINGS, FLOOR OR OTHER SURFACES IN ACCORDANCE WITH THE SPECIFICATIONS.
3. ANY PIPING, CONDUIT, OR WIRING PASSING THROUGH A WALL OR PARTITION CARRYING A FIRE RATING SHALL BE SEALED TIGHT TO THE WALL WITH A UL APPROVED METHOD. SEE ENGINEERED DRAWINGS.
4. ANY DUCTWORK SHOWN PASSING THROUGH A WALL OR PARTITION CARRYING A FIRE RATING SHALL BE EQUIPPED WITH AN APPROPRIATE FIRE RATED DAMPER AT THE POINT OF INTERSECTION WITH THE WALL. SEE MECHANICAL DRAWINGS FOR MORE INFO.
5. ALL MISCELLANEOUS WOOD FRAMING AND BLOCKING IN EXTERIOR WALLS AND ROOFS SHALL BE FIRE RETARDANT TREATED.
6. PENETRATIONS, INTO OR THROUGH, OF EITHER VERTICAL OR HORIZONTAL FIRE RATED BARRIERS SHALL BE PROTECTED BY A SYSTEM LISTED BY A RECOGNIZED TESTING AGENCY BY USING A DETAIL AND LISTING NUMBER PER NFPA 101 LIFE SAFETY CODE 1997 EDITION CHAPTER 6-2.3.2.4 (OR LATEST EDITION).

INDEX OF DRAWINGS

SHEET NUMBER	SHEET NAME
GENERAL INFORMATION	
G1.00	COVER SHEET
G1.02	GENERAL NOTES & SHEET INDEX
G2.00	CODE ANALYSIS
G3.40	LEVEL 4 LIFE SAFETY & OCCUPANT LOAD PLANS
ARCHITECTURAL DEMOLITION	
AD1.41	LEVEL 4 DEMOLITION PLAN
AD6.41	LEVEL 4 DEMOLITION REFLECTED CEILING PLAN
ARCHITECTURE	
A0.50	PARTITION TYPES & DETAILS
A1.40	4TH FLOOR OVERALL PLAN
A1.41	LEVEL 4 FLOOR PLAN
A5-00A	ANSI ADA ACCESSIBLE DETAILS
A6.40	LEVEL 4 OVERALL REFLECTED CEILING PLAN
A6.41	LEVEL 4 REFLECTED CEILING PLAN
A9.40	LEVEL 4 FINISH FLOOR OVERALL PLAN
A9.41	LEVEL 4 FINISH FLOOR PLAN
A10.01	MILLWORK SECTIONS & DETAILS
FIRE PROTECTION	
F0-01	FIRE PROTECTION GENERAL
F1-41	LEVEL 4 FIRE PROTECTION PLAN
PLUMBING	
P0-01	PLUMBING GENERAL
P1-41	LEVEL 4 PLUMBING PLAN
P4-01	PLUMBING SCHEDULES & DETAILS
MECHANICAL	
M0-01	HVAC GENERAL
M1-41	LEVEL 4 HVAC PLAN
M5-01	HVAC DETAILS
M6-01	HVAC SCHEDULES
ELECTRICAL DEMOLITION	
ED1-41	ELECTRICAL DEMOLITION LEVEL 4 FLOOR PLAN
ELECTRICAL	
E0-01	ELECTRICAL SCHEDULES
E0-02	ELECTRICAL DETAILS
E1-41	LIGHTING LEVEL 4 FLOOR PLAN
E2-41	POWER & COMMUNICATIONS LEVEL 4 FLOOR PLAN

ssoe®

S&W

PROFESSIONAL SEALS:

SOUTH CAROLINA — SSOE, INC No. 746 — CERTIFICATE OF AUTHORIZATION

STATE OF SOUTH CAROLINA — WILLIAM J. FLEMING — Columbia, SC — No. 3822 — REGISTERED ARCHITECT — 8-6-2021

SUBMITTAL/REVISION SCHEDULE:

NO.	DATE	DESCRIPTION
	8.06.2021	CONSTRUCTION DOCUMENTS

■ APPROVED FOR CONSTRUCTION
□ NOT APPROVED FOR CONSTRUCTION

CLIENT INFORMATION:

SOUTH CAROLINA EDUCATION LOTTERY

South Carolina Education Lottery®

CLIENT PROJECT #:	20048.00
SCEL PROJECT #:	Y20-N001-CB

PROJECT INFORMATION:

4TH FLOOR UPFIT

1333 MAIN STREET, COLUMBIA, SOUTH CAROLINA

SSOE/SW PROJECT #:	021-00531-00
SSOE/SW MANAGER:	BILL FLEMING

SSOE | STEVENS & WILKINSON
1501 Main Street, Suite 730
Columbia, SC 29201
T. (803) 765-0320

THIS DRAWING IS THE PROPERTY OF SSOE | STEVENS & WILKINSON. UNAUTHORIZED USE OF ANY KIND, INCLUDING USE ON OTHER PROJECTS, IS PROHIBITED.

© SSOE, INC. 2021

GENERAL NOTES & SHEET INDEX

G1.02

PROJECT NARRATIVE

THE SCOPE OF THIS PROJECT INCLUDES SELECTIVE DEMOLITION FOR THE EXPANSION OF THE PRINT ROOM AND CREATION OF SEVERAL SMALL PRIVATE OFFICES IN LIEU OF THE CURRENT OPEN OFFICE SPACE. MECHANICALLY, THERE WILL BE AN ADDITIONAL HVAC UNIT TO INCREASE AIR SUPPLY TO THE EXPANDED PRINT ROOM AND DIRECT EXHAUST TIED INTO EXISTING BUILDING DUCTWORK TO MITIGATE THE TRANSFER OF ODORS AND MINIMIZE HEAT LOAD IN THE PRINT ROOM.

APPLICABLE CODES

1. 2018 ICC INTERNATIONAL BUILDING CODE
2. 2018 ICC INTERNATIONAL EXISTING BUILDING CODE
3. 2018 ICC INTERNATIONAL FIRE CODE
4. 2018 ICC INTERNATIONAL FUEL GAS CODE
5. 2018 ICC INTERNATIONAL MECHANICAL CODE
6. 2018 ICC INTERNATIONAL PLUMBING CODE W/ FOLLOWING INSERTIONS:
   A. SECTION 305.4.1, INSERT "18"
   B. SECTION 903.1, INSERT "9"
7. 2017 NFPA 70 NATIONAL ELECTRIC CODE
8. 2009 ICC INTERNATIONAL ENERGY CODE
9. 2017 ICC A117.1 ACCESSIBLE AND USEABLE BUILDINGS AND FACILITIES

TABLE 5-1: FLOOD HAZARD INFORMATION AND FLOOD LOADS

FLOOD HAZARD AREA

Base Flood Elevation _____ MSL

Design Flood Elevation _____ MSL

NON HIGH-VELOCITY WAVE ACTION

Elevation of Lowest Proposed Floor _____ MSL Meet AS 2.6.2.2

Dry floodproofing ■ no ☐ yes per ASCE 24

HIGH-VELOCITY WAVE ACTION

Elevation of bottom of Lowest Horizontal Structural Member _____ MSL

Flotation Resistant ■ no ☐ yes

Breakaway Wall ■ no ☐

IBC 1612 and SE-900, as applicable

ZONING CERTIFICATION

"I hereby certify that, to the best ... use plans comply with applicable zoning ordinances, and that plans have been submitted ... for their review and/or approval."

Signed: _____ _____

...eer Date

If the project ... National Pollution Discharge Elimination System (NPDES) permit from SCDHEC, including ... on the Site Plan(s).

EROSION ... MENT REDUCTION / STORMWATER MANAGEMENT

Designer's Certification:

"I hereby certify that the measures in this plan are designed to control erosion, retain sediment on the site, and manage stormwater in a manner that neither any on-site nor off-site damage or problem is caused or increased, that all structural measures are designed to the minimum standards for health and safety, and that all the provisions of the plan are in compliance with the Regulations contained in Chapter 72, Article 2, SC Code of Regulations (Erosion and Sediment Reduction and Stormwater Management Regulations)."

Signed: _____ _____

Architect / Engineer Date

TABLE 5-2 SOILS & SITE

SOILS INVESTIGATION (If required) ☐ no ☐ yes per IBC 1803.2

SOILS CLASSIFICATION

Site Class _____ per ... 1613.3.2

Classes Soil of Materials (UCS System) _____

Allowable Footing Bearing Pressure _____ psf

MINIMUM DESIGN SOIL BEARING LOAD _____ ... J06.2

COMPACTION

Subgrade _____ Percent ... ASTM D1557 ☐ AASHTO ... loads)

Base _____ Percent ... 698 ☐ ASTM D1557 ☐ AASHTO ... aving & roads)

Other _____ Percent ... ASTM D698 ☐ ASTM D1557 ☐ AASHTO ... y for paving & roads)

MINIMUM DESIGN SOIL LATERAL ... _____ psf per IBC 1610.1

FOOTINGS

Undisturbed Footing ☐ no ☐ yes

Compacted Fill ☐ no ☐ yes per IBC 1804.5

ELEVATION

Elevation ... _____ MSL

Elevation of Lo... ...oting _____ MSL

Elevation of Lowest Floor or Basement _____ MSL

TABLE 5-3E CODE INFROMATION FOR ADDITIONS, ALTERATIONS, OR CHANGE OF OCCUPANCY TO AN EXISTING STRUCTURE

METHOD OF COMPLIANCE: (Check only one Option and all items that apply under that Option.)	■ **Option 1: Prescriptive Compliance Method (Chapter 5)** ■ Alteration ☐ Addition ☐ Change of Occupancy ☐ Historic Building
	☐ **Option 2: Work Area Compliance Method (Chapters 6-12)** ☐ Alteration Level 1, minor including reroofing (Ch. 7) ☐ Alteration Level 2, reconfigurations of space (Ch. 8) ☐ Alteration Level 3, work area exceeds 50% (Ch. 9) ☐ Change of Occupancy (Ch. 10) ☐ Additions (Ch. 11) ☐ Historic Building (Ch. 12) Aggregate area of building: _____ SF Work area: _____ SF
	☐ **Option 3: Performance Compliance Method (Chapter 13)**
Original Building Code and Edition Applicable at time of Construction: _____	
Existing Sprinkler System?	■ Yes ☐ No
Existing Fire Alarm System?	☐ Manual ■ Auto
Seismic Evaluation Required?	☐ Yes ■ No
Major Facility Project? (See §48-52-810(10)(a))	☐ Yes ■ No
Change of Occupancy: Existing Occupancy Classification(s): _____ New Occupancy Classification(s): _____	☐ Yes ■ No
Historic Building: ☐ Preservation ☐ Rehabilitation	☐ Yes ■ No ☐ Restoration ☐ Reconstruction

TABLE 5-4 BUILDING AREA

AREA LIMIT BY TABLE 503 OF IBC (Do not indicate increases for sprinklers & street frontage.)	0 SF (area limitations per story)
AREA MODIFICATION FROM EQUATION 5-1 OF IBC (Insert equation from IBC 506.1 with completed calculations in this box) (Equation 5-1) Aa = At + [At x If] + [At x Is] Aa = 0 SF + [0 SF x0.00] + 0 SF x0.00]	0 SF SF ...aximum modified area per story)
	0 SF (maximum area per story)
Total Allowed Area of Building (summary of all stories)	0 SF (total allowable area)
AREA AS DESIGNED ... (Repeat for each ...)	0 SF
	0 SF
	0 SF
	0
	0 SF
Total Designed Area of Building	...

Aa = Allowable area per story (square feet).
At = Tabulary area per story in accordance with Table 503
If = Area increase factor due to frontage (percent) as in accordance with Section 506.2.
Is = Area increase due to sprinkler protection accordance with Section 506.3.

TABLE 5-5 BUILDING HEIGHT

	AS DESI...		AS ALLOWED BY IBC	
	IN FEET		IN FEET	IN STORIES
Without any Allowable Increase				
Allowable Height Increase				
Total Height including any Allowable Height Increase				

TABLE 5-7 GENEP ... REQUIREMENTS

SEPARATIO...			
Firebl...	☐ no	☐ yes	per IBC Section 718
Drafts...	☐ no	☐ yes	per IBC Section 718
Smoke Cont... ...em Required	☐ no	☐ yes	per IBC Sectio...
Smoke Barriers Required	☐ no	☐ yes	per IBC S...
Smoke Partitions Required	☐ no	☐ yes	per I...
Fire Partition Required	☐ no	☐ yes	
Fire Barrier Required	☐ no	☐ ye...	...u7
ALARM & DETECTION			
Fire Alarm System Required	☐		...dC Section 907
Emergency Alarm System Required			per IFC 908
SUPPRESSION			
Standpipes Required		☐ yes	per IFC Section 905
Sprinklers Required	no	☐ yes	per IFC Section 903
Sprinklers Provided	☐ no	☐ yes	
Portable Extin...	☐ no	☐ yes	per IFC 906
Other Su... ...uired	☐ no	☐ yes	per IFC 904
Smo... ...d	☐ no	☐ yes	per IFC 910
Other: (In... provided fire and life safety features not listed above, if any)			

TABLE 5-8 FIRE RESISTIVE RATING OF BUILDING ELEMENTS

BUILDING ELEMENT	Rating As Required (in hours)	Rating As Designed (in hours)	Testing Agency & Design No. (UL, FM, etc.)	Designers Wall/Partition Key Code
Structural Frame (per IBC Table 601)				
Bearing Walls Exterior Interior (per IBC Table 601)				
Nonbearing Walls & Partitions Exterior Interior (per IBC Table 601 & 602) Note: Footnote "e." from Table 601				
Floor Construction including supporting beams & joists (per IBC Table 601)				
Roof Construction including supporting beams & joists (per IBC Table 601)				
Fire Walls (per IBC Section 706)				
Fire Barriers (per IBC Section 707)				
Shaft Enclosures (per IBC Sectio...				
Fire Partit... (per IB...				
Opening... ...g by Category ... doors, etc. per IBC Section ...				
Others (as required by designer)				

TABLE 5-9 STRUCTURAL DESIGN INFORMATION

RISK CATEGORY _____ IBC Table 1604.5

LIVE LOADS

Floor Live Load F_B = _____ PSF List the Floor Live ... each Occupancy

Roof Live Load R_B = _____ PSF

Ground Snow Load P_g = _____ PSF IBC Fi...

WIND LOADS

Analysis Procedure _____ ...c609.6

Ultimate Design V_{ult} = _____ MPH ...c609A-1609C

Wind Speed Exposure Category _____ ...1609.4.3

Internal Pressure Coefficient GC_{pi} = _____ ASCE 7

External Pressure Coefficient GC_p = _____ ASCE 7

SEISMIC LOADS

Seismic Importance Factor ASCE 7 Table 1.5-2

Site Class _____ IBC 1613.3.2

Mapped Spectral R... S_s = _____ S_1 = _____

Design Spec... ...n Parameters S_{DS} = _____ S_{D1} = _____

Seismic ... _____ IBC Tables 1613.3.5(1) & 1613.3.5(2)

Basic Se... ...ing System _____

Design Base ... _____ KIPS

Seismic Response Coefficient(s) C_s = _____ ASCE 7

Response Modification Factor(s) R = _____ ASCE 7

Analysis Procedure _____

ARCHITECTURAL - MECHANICAL - ETC. LOADS Provide as applicable: architectural items, mechanical, plumbing, etc. per ASCE 7

SPECIAL LOADS Provide as applicable: abnormal items, moving loads, impact, holding, etc. per ASCE

* per IBC Chapter 16 and ASCE 7 -- Information may be shown on initial Structural Sheet of the drawings or on Sheet with other code information. List floor design loads on structural plans.

TABLE 5-10 PLUMBING INFORMATION

WATER SYSTEM

Service Line Size _____ Inches

Peak _____ GPM

Total Demand _____ No. Fixture Units

SANITARY SEWER SYSTEM

Loading _____ GPD

Service Line Size _____ Inches

Slope _____ min inches/ft

MINIMUM PLUMBING FIXTURES REQUIRED ... per IBC Section 403 & Table 403.1

	Male - Required		Female - Required	Female - Provided
Water Closets				
Lavatories				
Urinals *				

OTHER FIXTURES

	...ed	Provided	Per IPC Section 403 & Table 403.1
Drinking Fo...			
Unisex *			
Service S...			
Bathtubs/Show...			
Others (list)			

* Urinals -- See IPC 419.2

Where mixed Occupancies occur within buildings, expand this table to indicate Occupant loads for each. The minimum required toilet fixtures are calculated for the total Design Occupant Load indicated in Table 5-6.

TABLE 5-12 MECHANICAL INFORMATION

AIR COMFORT SYSTEMS

Overall Thermal Transfer Value (OTTV): _____

Building Heating Load _____

Building Cooling Load _____

OTHER LOADING FEATURES

Glass U Factor _____ ...d wall ratio _____

Insulation Values Roof ... ...rior Walls _____

Outside Air Minimum While Occupied _____ CFM _____ Occupants

MECHANICAL SYSTEMS, SERV... ...PMENT

Briefly describe mechanical ...

(The a... ...ered a minimum and any special attribute required to meet the mechanical codes.)

TABLE 5-13 ELECTRICAL INFORMATION

SERVICE TRANSFORMER ■ By Utility Co. ■ By Agency (if by Agency)

_____ KVA Primary ... Phase

ELECTRICAL SERVICE INFORMATION

Service Voltage / Phase _____ ...

Service Entrance Conductors Size _____ ...

Total Connected Load _____

Estimated Maximum Demand _____

Available Fault Current in Symmetrical Amperes _____

Interrupting Capacity of Service Overcurrent Dev... _____

GROUNDING ELECTRODE SYSTEM CO... _____ (NEC 250)

EMERGENCY SERVICE INFOR...

Emergency Generator _____ KVA _____ Voltage/Phase _____ Fuel

Exit / Emergency Light... Integral Battery ■ Generator

Fire Alarm Syste... ■ Automatic ■ Addressable ■ Class A ■ Class B

LIGHTNI... ...VIDED ■ No ■ Yes

COMMU... ...ORDINATED ■ Not Required ■ Yes

Contact DSIT Network/Infrastructure Planning for applicability.

NOT APPLICABLE

ssoe®

S&W

PROFESSIONAL SEALS:

SOUTH CAROLINA CERTIFICATE OF AUTHORIZATION SSOE, INC No. 746

STATE OF SOUTH CAROLINA WILLIAM J. FLEMING Columbia, SC No. 3452 REGISTERED ARCHITECT 8-6-2021

SUBMITTAL/REVISION SCHEDULE:

NO.	DATE	DESCRIPTION
	8.06.2021	CONSTRUCTION DOCUMENTS

■ APPROVED FOR CONSTRUCTION
☐ NOT APPROVED FOR CONSTRUCTION

CLIENT INFORMATION:

SOUTH CAROLINA EDUCATION LOTTERY

South Carolina Education Lottery®

CLIENT PROJECT #:	20048.00
SCEL PROJECT #:	Y20-N001-CB

PROJECT INFORMATION:

4TH FLOOR UPFIT

1333 MAIN STREET, COLUMBIA, SOUTH CAROLINA

SSOE/SW PROJECT #:	021-00531-00
SSOE/SW MANAGER:	BILL FLEMING

SSOE | STEVENS & WILKINSON
1501 Main Street, Suite 730
Columbia, SC 29201
T. (803) 765-0320

THIS DRAWING IS THE PROPERTY OF SSOE | STEVENS & WILKINSON. UNAUTHORIZED USE OF ANY KIND, INCLUDING USE ON OTHER PROJECTS, IS PROHIBITED.
© SSOE, INC. 2021

CODE ANALYSIS

G2.00

BUILDING DESIGN OCCUPANT LOAD (per IBC TABLE 1004.1.2)

AREA NAME	AREA NUMBER	OCCUPANCY FLOOR AREA	FLOOR AREA PER OCCUPANT	CODE MINIMUM OCCUPANTS FOR THIS OCCUPANCY	DESIGN OCCUPANTS FOR THIS OCCUPANCY
LEVEL 4					
BUSINESS	B-1	1,173 SF	150 SF	8	8
		1,173 SF		8	8

IBC TABLE 1017.2

EXIT ACCESS TRAVEL DISTANCE

OCCUPANCY	WITH SPRINKLER SYSTEM
B	300 FEET MAXIMUM DISTANCE

LIFE SAFETY LEGEND

- EXISTING CONSTRUCTION
- NEW NON RATED METAL STUDS CONSTRUCTION
- EXISTING 1 HOUR RATED METAL STUDS CONSTRUCTION
- EXISTING 2 HOUR RATED METAL STUDS CONSTRUCTION
- CENTERLINE
- BUILDING ELEMENTS ABOVE
- 23.4 — EXISTING COLUMN GRID REFERENCE
- ALIGN — ALIGNMENT REFERENCE
- XFE — EXISTING FIRE EXTINGUISHER
- EGRESS TRAVEL DISTANCE
- EXIT LIGHT FIXTURE - NEW
- EXIT LIGHT FIXTURE - EXISTING TO REMAIN

999 / 999
- DESIGN # OF OCCUPANTS
- MAXIMUM # OF OCCUPANTS ALLOWABLE PER EGRESS SYSTEM WIDTH

EGRESS CAPACITY TAG

60
- DOOR & FRAME RATING IN MINUTES

DOOR IDENTIFICATION

4W
- PARTITION RATING *NOTED ON LIFE SAFETY PLANS

PARTITION TYPE IDENTIFICATION

Name 150 SF 101 999 ZONE
- NAME (AT OCCUPANT COUNT PLANS AND LIFE SAFETY PLANS, THIS IS THE OCCUPANT LOAD FACTOR TYPE)
- SQUARE FOOTAGE
- NUMBER (IF USED)
- OCCUPANT LOAD COUNT (IF USED)
- ZONE (IF USED)

AREA REFERENCE

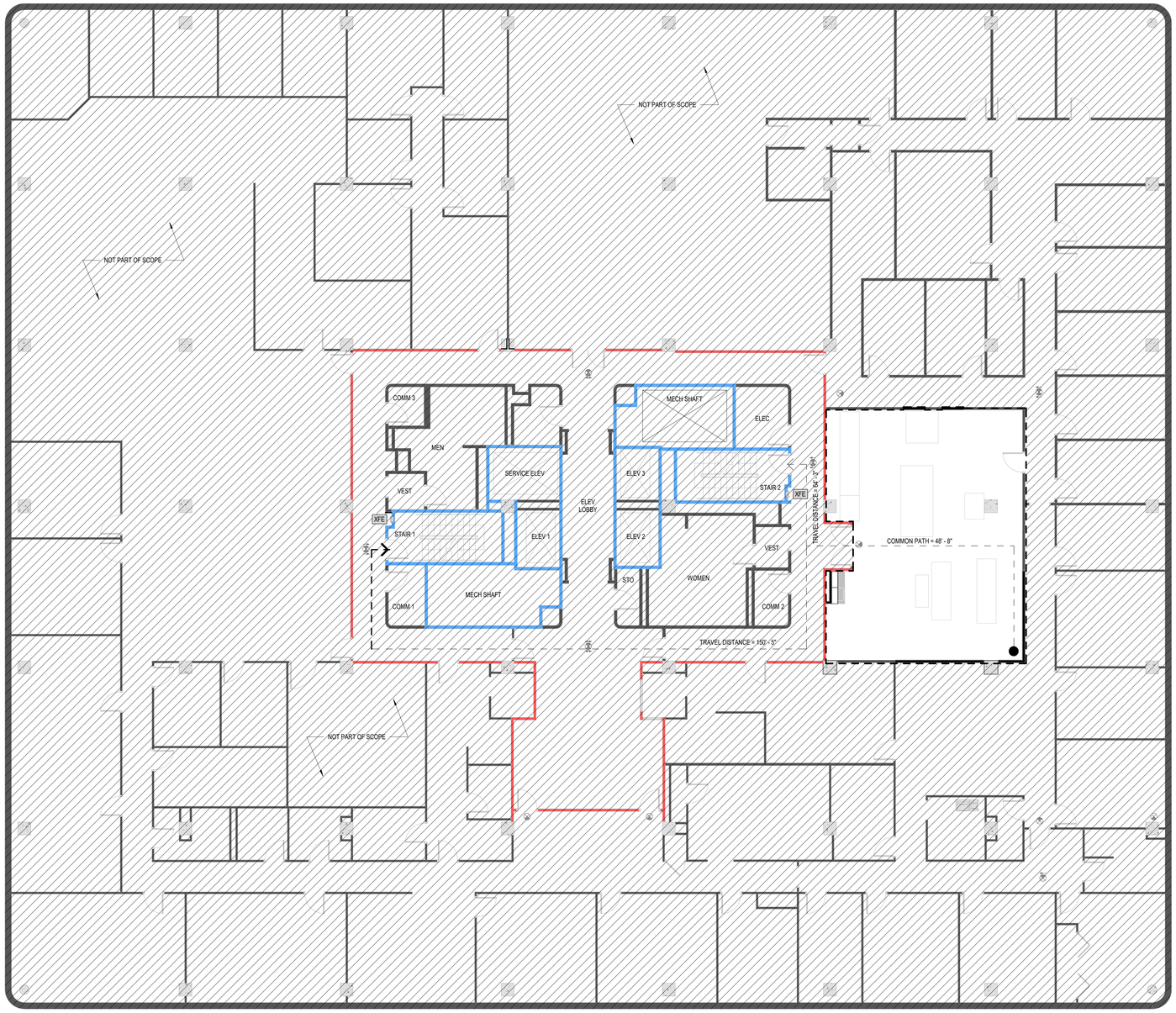

1 LIFE SAFETY FLOOR PLAN
1/8" = 1'-0"

LEGEND

BUSINESS

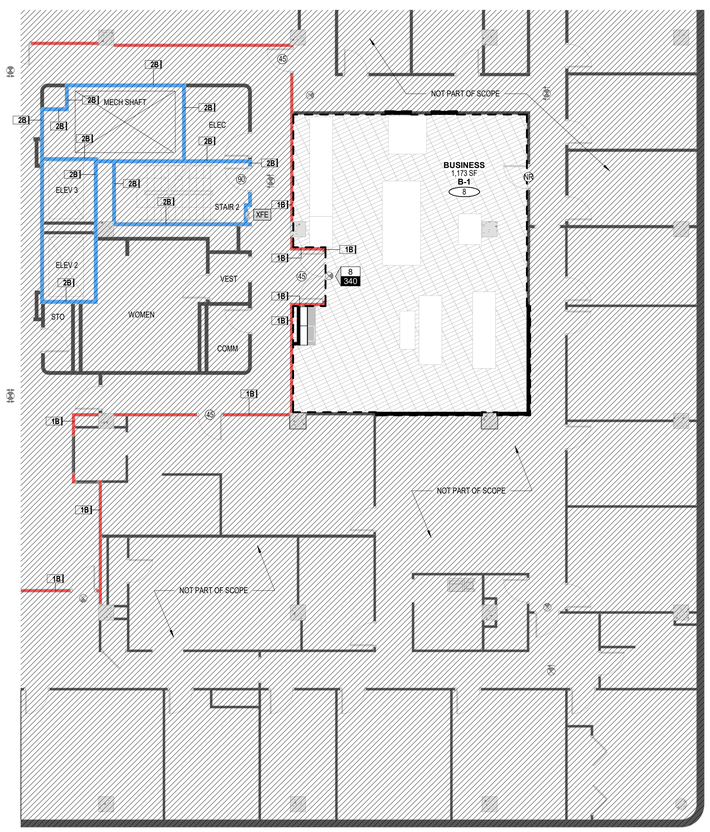

2 OCCUPANCY FLOOR PLAN
1/8" = 1'-0"

TRUE NORTH
PROJECT NORTH

C:\Autodesk\Revit\2004800 - Arch - SC Education Lottery Upfit - Adjusted Scope - V19.2_lbajarias@ssoe.com.rvt :FILE PATH
10/20/2021 3:05:43 PM :PRINT DATE

SSOE
S&W

PROFESSIONAL SEALS:

SOUTH CAROLINA CERTIFICATE OF AUTHORIZATION SSOE, INC No. 746

STATE OF SOUTH CAROLINA WILLIAM J. FLEMING Columbia, SC No. 3452 REGISTERED ARCHITECT

8-6-2021

SUBMITTAL/REVISION SCHEDULE:

NO.	DATE	DESCRIPTION
	8.06.2021	CONSTRUCTION DOCUMENTS

■ APPROVED FOR CONSTRUCTION
□ NOT APPROVED FOR CONSTRUCTION

CLIENT INFORMATION:

SOUTH CAROLINA EDUCATION LOTTERY

South Carolina Education Lottery®

CLIENT PROJECT #:	20048.00
SCEL PROJECT #:	Y20-N001-CB

PROJECT INFORMATION:

4TH FLOOR UPFIT

1333 MAIN STREET, COLUMBIA, SOUTH CAROLINA

SSOE/SW PROJECT #:	021-00531-00
SSOE/SW MANAGER:	BILL FLEMING

SSOE | STEVENS & WILKINSON
1501 Main Street, Suite 730
Columbia, SC 29201
T. (803) 765-0320

THIS DRAWING IS THE PROPERTY OF SSOE | STEVENS & WILKINSON. UNAUTHORIZED USE OF ANY KIND, INCLUDING USE ON OTHER PROJECTS, IS PROHIBITED.

© SSOE, INC. 2021

LEVEL 4 LIFE SAFETY & OCCUPANT LOAD PLANS

G3.40

1 LEVEL 4 DEMOLITION PLAN
1/4" = 1'-0"

DEMOLITION LEGEND

B01	KEYNOTE - SEE KEYNOTE LEGEND
	AREA OF "NO WORK"
	AREA OF DEMOLITION AS DESCRIBED
	CONSTRUCTION TO BE DEMOLISHED (PLAN) [SEE KEYNOTES FOR MORE DETAIL]
	EXISTING EXTERIOR CONSTRUCTION (PLAN)
	EXISTING INTERIOR NON-RATED CONSTRUCTION
	EXISTING INTERIOR 1 HOUR CONSTRUCTION
	EXISTING INTERIOR 2 HOUR CONSTRUCTION

DEMOLITION KEYNOTE LEGEND

KEYNOTE #	DESCRIPTION
SLABS & FLOOR FINISHES	
A02	REMOVE EXISTING CARPET AND RUBBER BASE COMPLETE. PREPARE FLOOR TO RECEIVE NEW FINISHES AS SPECIFIED.
A03	REMOVE EXISTING VCT AND RUBBER BASE COMPLETE. PREPARE FLOOR TO RECEIVE NEW FINISHES AS SPECIFIED.
WALLS & WALL FINISHES	
B01	REMOVE WALL COMPLETELY. CAP ANY UTILITIES AS REQUIRED - SEE PLUMBING AND ELECTRICAL DRAWINGS FOR MORE INFORMATION. PREPARE ADJACENT WALL AND FLOOR SURFACES TO RECEIVE NEW FINISHES AS SPECIFIED.
B07	PREPARE WALL TO RECIEVE NEW FINISHES. SEE FINISH LEGEND AND SCHEDULES.
DOORS & FRAMES	
D01	REMOVE DOOR AND HOLLOW FRAME COMPLETELY PREPARE ADJACENT SURFACES TO RECEIVE FINISHES AS SPECIFIED AND INFILL OPENING TO MATCH ADJACENT SURFACES.
EQUIPMENT, CASEWORK & FURNITURE	
F16	PROTECT EXISTING WALL MOUNTED DEVICES TO REMAIN (INTERCOM, CLOCK, ETC.) REMOVE PROTECTION AND CLEAN UPON COMPLETION. ENSURE ITEM OPERATES AS REQUIRED.

GENERAL DEMOLITION NOTES

A. CONTRACTOR SHALL IMMEDIATELY NOTIFY THE ARCHITECT OF ANY DISCREPANCIES WITHIN THE CONSTRUCTION DOCUMENTS OR ANY FIELD CONDITIONS WHICH DIFFER FROM THOSE DESCRIBED WITHIN THE DOCUMENTS.
B. ALL REQUIRED DEMOLITION IS INCLUDED IN THE GENERAL CONTRACT. DEMOLITION CONSISTS OF THE REMOVAL OF ANY EXISTING ELEMENT WHICH INTERFERES WITH THE COMPLETION OF NEW CONSTRUCTION OR TEMPORARY EGRESS MEASURES.
C. DEBRIS RESULTING FROM DEMOLITION SHALL BE REMOVED FROM THE CONSTRUCTION SITE ON A DAILY BASIS.
D. ALL SURFACES DISTURBED BY DEMOLITION, CUTTING OR PATCHING SHALL BE LEFT WITH A "CLEAN CUT" TO FACILITATE THE MATCHING OF EXISTING SURFACES WITH ADJACENT NEW CONSTRUCTION.
E. ANY DAMAGE TO EXISTING CONDITIONS CAUSED BY DEMOLITION AND/OR NEW WORK SHALL BE REPAIRED AS DETAILED, BY THE CONTRACTOR RESPONSIBLE FOR THE DAMAGE.
F. THE CONTRACTOR SHALL INSTALL TEMPORARY BARRIERS AS REQUIRED TO PREVENT THE SPREAD OF DUST AND FUMES TO AREAS NOT INCLUDED IN THE WORK.
G. THE CONTRACTOR SHALL MAINTAIN EMERGENCY EGRESS OF OCCUPANTS OF ADJACENT BUILDINGS AND TENANTS AT ALL TIMES.
H. THE CONTRACTOR SHALL COORDINATE WITH THE OWNER AND OBTAIN APPROVALS FOR ANY ACTIVITIES WHICH INVOLVE ANY UTILITY INTERRUPTIONS OR EXCESSIVE NOISE.
I. THE CONTRACTOR SHALL PROTECT ADJACENT EXISTING ROOF SURFACES FROM DAMAGE BY DEMOLITION AND CONSTRUCTION ACTIVITIES. ANY REPAIR ANY DAMAGE THAT OCCURS.
J. DO NOT STORE ANY MATERIALS ON ADJACENT ROOFS, AND LIMIT FOOT TRAFFIC TO THE EXTENT POSSIBLE.
K. DIMENSIONS SHOWN ON EXISTING PLANS ARE SHOWN AS A REFERENCE AND SHALL BE CONSIDERED +/- 8" EXACT DIMENSIONS ARE REQUIRED. FIELD MEASUREMENTS SHALL BE TAKEN BY THE CONTRACTOR.
L. ANY DUCT WORK SHOWN PASSING THROUGH A NEW OR EXISTING WALL CARRYING A FIRE RATING SHALL BE EQUIPPED WITH APPROPRIATE FIRE RATED DAMPERS AT THE POINT OF INTERSECTION WITH THE WALL.
M. ANY NEW OR EXISTING PIPING CONDUIT OR WIRING PASSING THROUGH A NEW OR EXISTING WALL CARRYING A FIRE RATING SHALL BE SEALED TIGHT TO THE WALL WITH A UL APPROVED METHOD.
N. ALL PEELING PAINT SHALL BE SCRAPED FROM EXISTING WALLS AND WALLS SHALL BE CLEANED PRIOR TO REPAINTING.
O. WHEN EXISTING PAINTED SURFACES ARE PATCHED IN VISIBLE AREAS, THE ENTIRE SURFACE OR WALL SHALL BE PAINTED TO ACHIEVE A UNIFORM APPEARANCE.
P. ALL HOLES IN MASONRY WALLS, EXISTING OR MADE BY THE REMOVAL OF ANY FIXTURES OR EQUIPMENT, SHALL BE PATCHED WITH MASONRY TO MATCH EXISTING. INSTALL NEW MASONRY FLUSH WITH EXISTING ON BOTH SIDES.
Q. REMOVE ALL WALL BRACKETS, PLASTIC SHIELDS, HOOKS, CLIPS, NAILS, TAPE AND SCREWS ON EXISTING WALLS IN PREPARATION FOR SMOOTH CLEAN SURFACE (TYPICAL AT SPACES WHERE NEW FINISH IS SCHEDULED).
R. ALL DEMOLITION SHALL BE PERFORMED TO PREVENT THE ARBITRARY DESTRUCTION OR INTERRUPTION OF CONCEALED UTILITIES WHICH ARE INTENDED TO REMAIN IN USE AND THE ROUTING OF WHICH CAN NOT BE PRE-DETERMINED UNTIL DEMOLITION IS STARTED. ALL SUCH DISCOVERIES OF UTILITIES WHICH ARE IN A DIFFERENT LOCATION FROM THAT INDICATED, CHANGE DIRECTION FROM FLOOR-TO-FLOOR, ETC. OR ARE UNIDENTIFIED, SHALL BE REPORTED TO THE ARCHITECT BEFORE REMOVAL OR DISTURBANCE.
S. REMOVE ALL WALL MOUNTED ACCESSORIES IN AREAS OF DEMOLITION AND RENOVATION. PATCH/REPAIR WALLS TO MAKE SMOOTH AND PREPARE FOR NEW WALL FINISH. REINSTALL ANY REUSED/RELOCATED WALL ACCESSORIES PER MANUFACTURER'S INSTRUCTIONS.
T. SEE MECHANICAL AND ELECTRICAL DRAWINGS FOR MORE INFORMATION ON DEMOLITION AND CONSTRUCTION TO REMAIN.
U. AT AREAS WHERE NEW SYSTEMS ARE INSTALLED ABOVE EXISTING ACOUSTICAL LAY-IN CEILINGS, REMOVE THE CEILING TILES AND STORE IN A LOCATION AS DIRECTED BY THE OWNER. REINSTALL THE TILE UPON COMPLETION OF THE SYSTEMS WORK. PROTECT TILES FROM DAMAGE, DIRT OR STAINING. REPLACE ANY TILE WHICH DOES GET DAMAGED, DIRTY OR STAINED WITH NEW TILES MATCHING THE TYPE OF THE ADJACENT EXISTING TILES.
V. REFER TO SPECIFICATIONS FOR ADDITIONAL REQUIREMENTS. WHERE GENERAL DEMOLITION NOTES DO NOT AGREE WITH SPECIFICATIONS, REFER DISCREPANCY TO ARCHITECT FOR RESOLUTION.
W. EXISTING ELEVATIONS AND LOCATIONS TO BE JOINED SHALL BE VERIFIED BY THE CONTRACTOR BEFORE CONSTRUCTION. SHOULD THEY DIFFER FROM THOSE SHOWN ON THE DRAWINGS, THE CONTRACTOR SHALL NOTIFY THE ARCHITECT SO THAT MODIFICATIONS CAN BE MADE BEFORE PROCEEDING WITH THE WORK.

TRUE NORTH
PROJECT NORTH

ssoe®
S&W

PROFESSIONAL SEALS:

SOUTH CAROLINA
SSOE, INC
No. 746
CERTIFICATE OF AUTHORIZATION

STATE OF SOUTH CAROLINA
WILLIAM J. FLEMING
Columbia, SC
No. 3402
REGISTERED ARCHITECT
8-6-2021

SUBMITTAL/REVISION SCHEDULE:

NO.	DATE	DESCRIPTION
	8.06.2021	CONSTRUCTION DOCUMENTS

■ APPROVED FOR CONSTRUCTION
□ NOT APPROVED FOR CONSTRUCTION

CLIENT INFORMATION:

SOUTH CAROLINA EDUCATION LOTTERY

South Carolina Education Lottery®

CLIENT PROJECT #:	20048.00
SCEL PROJECT #:	Y20-N001-CB

PROJECT INFORMATION:

4TH FLOOR UPFIT

1333 MAIN STREET, COLUMBIA, SOUTH CAROLINA

SSOE/SW PROJECT #:	021-00531-00
SSOE/SW MANAGER:	BILL FLEMING

SSOE | STEVENS & WILKINSON
1501 Main Street, Suite 730
Columbia, SC 29201
T. (803) 765-0320

THIS DRAWING IS THE PROPERTY OF SSOE | STEVENS & WILKINSON. UNAUTHORIZED USE OF ANY KIND, INCLUDING USE ON OTHER PROJECTS, IS PROHIBITED.
© SSOE, INC. 2021

LEVEL 4 DEMOLITION PLAN

AD1.41

C:\Autodesk\Revit\2004800 - Arch - SC Education Lottery Upfit - Adjusted Scope - V19.2_lbajarias@ssoe.com.rvt :FILE PATH
10/20/2021 3:08:42 PM :PRINT DATE

1 LEVEL 4 DEMOLITION RCP
1/4" = 1'-0"

DEMOLITION LEGEND

B01	KEYNOTE - SEE KEYNOTE LEGEND
	AREA OF "NO WORK"
	AREA OF DEMOLITION AS DESCRIBED
	CONSTRUCTION TO BE DEMOLISHED (PLAN) [SEE KEYNOTES FOR MORE DETAIL]
	EXISTING EXTERIOR CONSTRUCTION (PLAN)
	EXISTING INTERIOR NON-RATED CONSTRUCTION
	EXISTING INTERIOR 1 HOUR CONSTRUCTION
	EXISTING INTERIOR 2 HOUR CONSTRUCTION

DEMOLITION KEYNOTE LEGEND

KEYNOTE #	DESCRIPTION
CEILINGS & CEILING MOUNTED EQUIPMENT	
E01	REMOVE EXISTING GYPSUM BOARD CEILING COMPLETE INCLUDING ALL LIGHTS AND DIFFUSERS. PROTECT ANY SPRAY FIRE PROOFING ENCOUNTERED. PREPARE ADJACENT SURFACES TO REMAIN TO RECEIVE NEW FINISHES AS SPECIFIED. SEE MECHANICAL AND ELECTRICAL DRAWINGS FOR MORE INFORMATION.
CEILINGS & CEILING MOUNTED EQUIPMENT	
E02	REMOVE EXISTING ACOUSTICAL CEILING AND GRID SYSTEM COMPLETE, INCLUDING ALL LIGHTS AND DIFFUSERS. PROTECT ANY SPRAY FIRE PROOFING ENCOUNTERED. PREPARE ADJACENT SURFACES TO REMAIN TO RECEIVE NEW FINISHES AS SPECIFIED. SEE MECHANICAL AND ELECTRICAL DRAWINGS FOR MORE INFORMATION.
CEILINGS & CEILING MOUNTED EQUIPMENT	
E03	REMOVE EXISTING LIGHT FIXTURES COMPLETELY. SEE ELECTRICAL DRAWINGS FOR MORE INFORMATION.

GENERAL DEMOLITION NOTES

A. CONTRACTOR SHALL IMMEDIATELY NOTIFY THE ARCHITECT OF ANY DISCREPANCIES WITHIN THE CONSTRUCTION DOCUMENTS OR ANY FIELD CONDITIONS WHICH DIFFER FROM THOSE DESCRIBED WITHIN THE DOCUMENTS.
B. ALL REQUIRED DEMOLITION IS INCLUDED IN THE GENERAL CONTRACT. DEMOLITION CONSISTS OF THE REMOVAL OF ANY EXISTING ELEMENT WHICH INTERFERES WITH THE COMPLETION OF NEW CONSTRUCTION OR TEMPORARY EGRESS MEASURES.
C. DEBRIS RESULTING FROM DEMOLITION SHALL BE REMOVED FROM THE CONSTRUCTION SITE ON A DAILY BASIS.
D. ALL SURFACES DISTURBED BY DEMOLITION, CUTTING OR PATCHING SHALL BE LEFT WITH A "CLEAN CUT" TO FACILITATE THE MATCHING OF EXISTING SURFACES WITH ADJACENT NEW CONSTRUCTION.
E. ANY DAMAGE TO EXISTING CONDITIONS CAUSED BY DEMOLITION AND/OR NEW WORK SHALL BE REPAIRED AS DETAILED, BY THE CONTRACTOR RESPONSIBLE FOR THE DAMAGE.
F. THE CONTRACTOR SHALL INSTALL TEMPORARY BARRIERS AS REQUIRED TO PREVENT THE SPREAD OF DUST AND FUMES TO AREAS NOT INCLUDED IN THE WORK.
G. THE CONTRACTOR SHALL MAINTAIN EMERGENCY EGRESS OF OCCUPANTS OF ADJACENT BUILDINGS AND TENANTS AT ALL TIMES.
H. THE CONTRACTOR SHALL COORDINATE WITH THE OWNER AND OBTAIN APPROVALS FOR ANY ACTIVITIES WHICH INVOLVE ANY UTILITY INTERRUPTIONS OR EXCESSIVE NOISE.
I. THE CONTRACTOR SHALL PROTECT ADJACENT EXISTING ROOF SURFACES FROM DAMAGE BY DEMOLITION AND CONSTRUCTION ACTIVITIES. ANY REPAIR ANY DAMAGE THAT OCCURS.
J. DO NOT STORE ANY MATERIALS ON ADJACENT ROOFS, AND LIMIT FOOT TRAFFIC TO THE EXTENT POSSIBLE.
K. DIMENSIONS SHOWN ON EXISTING PLANS ARE SHOWN AS A REFERENCE AND SHALL BE CONSIDERED +/- 8" EXACT DIMENSIONS ARE REQUIRED. FIELD MEASUREMENTS SHALL BE TAKEN BY THE CONTRACTOR.
L. ANY DUCT WORK SHOWN PASSING THROUGH A NEW OR EXISTING WALL CARRYING A FIRE RATING SHALL BE EQUIPPED WITH APPROPRIATE FIRE RATED DAMPERS AT THE POINT OF INTERSECTION WITH THE WALL.
M. ANY NEW OR EXISTING PIPING CONDUIT OR WIRING PASSING THROUGH A NEW OR EXISTING WALL CARRYING A FIRE RATING SHALL BE SEALED TIGHT TO THE WALL WITH A UL APPROVED METHOD.
N. ALL PEELING PAINT SHALL BE SCRAPED FROM EXISTING WALLS AND WALLS SHALL BE CLEANED PRIOR TO REPAINTING.
O. WHEN EXISTING PAINTED SURFACES ARE PATCHED IN VISIBLE AREAS, THE ENTIRE SURFACE OR WALL SHALL BE PAINTED TO ACHIEVE A UNIFORM APPEARANCE.
P. ALL HOLES IN MASONRY WALLS, EXISTING OR MADE BY THE REMOVAL OF ANY FIXTURES OR EQUIPMENT, SHALL BE PATCHED WITH MASONRY TO MATCH EXISTING. INSTALL NEW MASONRY FLUSH WITH EXISTING ON BOTH SIDES.
Q. REMOVE ALL WALL BRACKETS, PLASTIC SHIELDS, HOOKS, CLIPS, NAILS, TAPE AND SCREWS ON EXISTING WALLS IN PREPARATION FOR SMOOTH CLEAN SURFACE (TYPICAL AT SPACES WHERE NEW FINISH IS SCHEDULED).
R. ALL DEMOLITION SHALL BE PERFORMED TO PREVENT THE ARBITRARY DESTRUCTION OR INTERRUPTION OF CONCEALED UTILITIES WHICH ARE INTENDED TO REMAIN IN USE AND THE ROUTING OF WHICH CAN NOT BE PRE-DETERMINED UNTIL DEMOLITION IS STARTED. ALL SUCH DISCOVERIES OF UTILITIES WHICH ARE IN A DIFFERENT LOCATION FROM THAT INDICATED, CHANGE DIRECTION FROM FLOOR-TO-FLOOR, ETC. OR ARE UNIDENTIFIED, SHALL BE REPORTED TO THE ARCHITECT BEFORE REMOVAL OR DISTURBANCE.
S. REMOVE ALL WALL MOUNTED ACCESSORIES IN AREAS OF DEMOLITION AND RENOVATION. PATCH/REPAIR WALLS TO MAKE SMOOTH AND PREPARE FOR NEW WALL FINISH. REINSTALL ANY REUSED/RELOCATED WALL ACCESSORIES PER MANUFACTURER'S INSTRUCTIONS.
T. SEE MECHANICAL AND ELECTRICAL DRAWINGS FOR MORE INFORMATION ON DEMOLITION AND CONSTRUCTION TO REMAIN.
U. AT AREAS WHERE NEW SYSTEMS ARE INSTALLED ABOVE EXISTING ACOUSTICAL LAY-IN CEILINGS, REMOVE THE CEILING TILES AND STORE IN A LOCATION AS DIRECTED BY THE OWNER. REINSTALL THE TILE UPON COMPLETION OF THE SYSTEMS WORK. PROTECT TILES FROM DAMAGE, DIRT OR STAINING. REPLACE ANY TILE WHICH DOES GET DAMAGED, DIRTY OR STAINED WITH NEW TILES MATCHING THE TYPE OF THE ADJACENT EXISTING TILES.
V. REFER TO SPECIFICATIONS FOR ADDITIONAL REQUIREMENTS. WHERE GENERAL DEMOLITION NOTES DO NOT AGREE WITH SPECIFICATIONS, REFER DISCREPANCY TO ARCHITECT FOR RESOLUTION.
W. EXISTING ELEVATIONS AND LOCATIONS TO BE JOINED SHALL BE VERIFIED BY THE CONTRACTOR BEFORE CONSTRUCTION. SHOULD THEY DIFFER FROM THOSE SHOWN ON THE DRAWINGS, THE CONTRACTOR SHALL NOTIFY THE ARCHITECT SO THAT MODIFICATIONS CAN BE MADE BEFORE PROCEEDING WITH THE WORK.

ssoe®
S&W

PROFESSIONAL SEALS:

SOUTH CAROLINA CERTIFICATE OF AUTHORIZATION SSOE, INC No. 746

STATE OF SOUTH CAROLINA WILLIAM J. FLEMING Columbia SC No. 3452 REGISTERED ARCHITECT
8-6-2021

SUBMITTAL/REVISION SCHEDULE:

NO.	DATE	DESCRIPTION
	8.06.2021	CONSTRUCTION DOCUMENTS

■ APPROVED FOR CONSTRUCTION
□ NOT APPROVED FOR CONSTRUCTION

CLIENT INFORMATION:

SOUTH CAROLINA EDUCATION LOTTERY

South Carolina Education Lottery®

CLIENT PROJECT #:	20048.00
SCEL PROJECT #:	Y20-N001-CB

PROJECT INFORMATION:

4TH FLOOR UPFIT

1333 MAIN STREET, COLUMBIA, SOUTH CAROLINA

SSOE/SW PROJECT #:	021-00531-00
SSOE/SW MANAGER:	BILL FLEMING

SSOE | STEVENS & WILKINSON
1501 Main Street, Suite 730
Columbia, SC 29201
T. (803) 765-0320

THIS DRAWING IS THE PROPERTY OF SSOE | STEVENS & WILKINSON. UNAUTHORIZED USE OF ANY KIND, INCLUDING USE ON OTHER PROJECTS, IS PROHIBITED.
© SSOE, INC. 2021

LEVEL 4 DEMOLITION REFLECTED CEILING PLAN

AD6.41

C:\Autodesk\Revit\2004800 - Arch - SC Education Lottery Upfit - Adjusted Scope - V19.2_lbajarias@ssoe.com.rvt :FILE PATH
10/20/2021 3:08:44 PM :PRINT DATE

A | B | C | D | E | F | G | H | J

PARTITION TYPE IDENTIFICATION LEGEND & NOTES

PARTITION TAG LEGEND

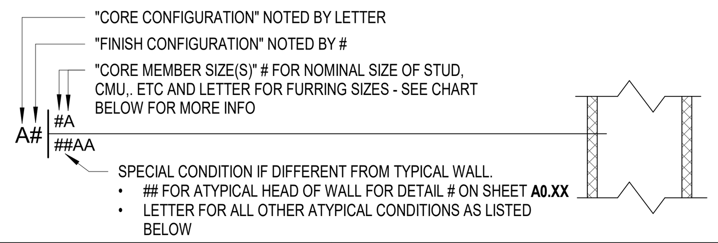

"CORE CONFIGURATION"

F FC
G MS (FINISH ONE SIDE)
M MS (FINISH TWO SIDES)
MX MS (FINISH TWO SIDES) - EXISTING

"FINISH CONFIGURATION"

1	I I + GWB (1)	or	GWB (1) + I I + GWB (1)
2	I I + GWB (2)	or	GWB (2) + I I + GWB (2)
3	I I + GWB (3)	or	GWB (3) + I I + GWB (3)
4	GWB (1) + I I + GWB (2)		
5	GWB (1) + I I + GWB (3)		
6	GWB (2) + I I + GWB (3)		
7	GWB (2) + I I + GWB (1)		
8	GWB (3) + I I + GWB (1)		
9	GWB (3) + I I + GWB (2)		

ABBREVIATIONS

I I	=	"CORE"
(#)	=	NUMBER OF LAYERS OF GWB
CIP	=	CAST-IN-PLACE CONCRETE
CMU	=	CONCRETE MASONRY UNIT
FC	=	STUD FURRING (TYPE AS SCHEDULED)
GSL	=	GYPSUM SHAFT LINER
GWB	=	GYPSUM WALLBOARD, TYPE AS SCHEDULED
HF	=	HAT-SHAPED METAL FURRING
MS	=	METAL STUD FRAMING
MF	=	METAL STUD FURRING
MSS	=	METAL SHAFTWALL STUD FRAMING
RC	=	RESILIENT CHANNEL
WS	=	WOOD STUD FRAMING
WF	=	WOOD FURRING
ZF	=	METAL Z-FURRING

PARTITION - "CORE MEMBER SIZE"

METAL STUDS	
NOMINAL	ACTUAL
1	1 5/8"
2	2 1/2"
3	3 5/8"
4	4"
6	6"
8	8"

METAL STUD FURRING (MSF)		
CALLOUT	TYPE	SIZE (DEPTH ONLY)
A	HF	7/8"
B	HF	1 1/2"
C	RC	1/2"
D	ZF	1"
E	ZF	1 1/2"
F	ZF	2"
G	ZF	2 1/2"
H	MSF	3/4"
J	MSF	1"
K	MSF	1 1/2"
L	MSF	2"

1. CAST-IN-PLACE CONCRETE "STRUCTURAL MEMBER SIZE IS DIMENSIONED AT PLANS, SEE STRUCTURAL DWGS FOR MORE INFORMATION.
2. RESILIENT CHANNEL IS 1/2" DEEP, SEE SPECIFICATIONS FOR LENGTH AND TYPE
3. FOR ALL METAL STUD FURRING, ONLY DEPTH IS NOTED. SEE SPECIFICATION FOR ALL OTHER SIZE AND GAUGE REQUIREMENTS. FURRING LEGS SHALL BE OF DIMENSION ADEQUATE TO MEET PERFORMANCE AND FASTENING REQUIREMENTS.

PARTITION - "RATING" - CALLED OUT ON LIFE SAFETY PLANS

SP	SMOKE PARTITION
SB	SMOKE BARRIER
5P	30 MINUTE FIRE PARTITION
1B	1 HOUR FIRE BARRIER
1P	1 HOUR FIRE PARTITION
1W	1 HOUR FIRE WALL
2B	2 HOUR FIRE BARRIER
2P	2 HOUR FIRE PARTITION
2W	2 HOUR FIRE WALL
3B	3 HOUR FIRE BARRIER
3P	3 HOUR FIRE PARTITION
3W	3 HOUR FIRE WALL

PARTITION - "HEAD CONDITION"

1. ALL RATED WALLS ARE TO UNDERSIDE OF DECK.
2. ALL ACOUSTICAL WALLS ARE TO UNDERSIDE OF DECK.
3. SEE PARTITION TYPE DETAILS FOR TYPICAL HEAD OF WALL CONDITION. IF HEAD OF WALL CONDITION IS ATYPICAL, NUMBER NOTED IN PARTITION TYPE TAG IN SPECIAL CONDITIONS AREA OF TAG CORRESPONDS TO DETAIL # ON HEAD OF WALL CONDITION DETAILS ON SHEET **A0.50**

PARTITION - "SPECIAL CONDITION"

FOR ALL OTHER ATYPICAL CONDITIONS, LETTER CORRESPONDS TO LIST BELOW:

A. NOT USED
B. NOT USED
C. STUD AND GWB TO 6" ABOVE HIGHEST ADJACENT CEILING.
D. NOT USED
E. EXTEND EXISTING WALL STUD & BOTH SIDES OF GWB TO UNDERSIDE OF DECK. SEAL ALONG BOTH SIDES OF TOP OF GWB TO PREVENT FUMES AND ODORS IN THE PRINT ROOM FROM INFILTRATING ADJACENT ROOMS AND CORRIDORS. SEE WALL PARTITION ON 5/A0.50 FOR DETAILS.
F. STUD AND GWB TO EXTEND TO UNDERSIDE OF CEILING. TOP OF WALL TO BE CAPPED WITH GWB. SEE HEAD DETAIL #4 ON A0.50. LIGHT GAUGE MFR.'S ENGINEER OF RECORD TO DESIGN WALL TO MEET PERFORMANCE CRITERIA AS DETAILED AT GENERAL NOTES ON A0.10. IF REQUIRED, PROVIDE STRUCTURAL STEEL TUBE POST TO PROVIDE ADDITIONAL SUPPORT FOR WALL.
G. STUD AND GWB TO EXTEND TO UNDERSIDE OF DECK. SEE HEAD DETAIL #5 ON A0.50.

GENERAL NOTES: STUD CONSTRUCTION

1. BASIS OF DESIGN: *STEEL FRAMED PARTITIONS*
DESIGN IS BASED ON GUIDELINES INCLUDED IN PRODUCT TECHNICAL INFORMATION OF THE STEEL MANUFACTURE'S ASSOCIATION LATEST EDITION OF THE SSMA PUBLICATION AND THE FOLLOWING PERFORMANCE CRITERIA:

A. LIMITING HEIGHT CRITERIA:
DEFLECTION OF **L/240** AT **5 LBS. PER SQ. FT.** CONSTANT AIR-PRESSURE LOADS

B. THICKNESS-STEEL COMPONENTS:

GAUGE	DESIGN THICKNESS
22	0.0283
20	0.0346
18	0.0451

2. MINIMUM GAUGE:
IF LIMITING HEIGHT AS SCHEDULED IN PARTITION DETAILS EXCEEDS PROJECT CONDITIONS OR IF THE SELECTED STEEL STUD MANUFACTURE'S THICKNESS OF STEEL COMPONENTS VARIES FROM THE BASIS OF DESIGN AS SET FORTH ABOVE, PROVIDE MANUFACTURE'S STANDARD THICKNESS (GAUGE) THAT MEETS OR EXCEEDS LIMITING HEIGHT PERFORMANCE CRITERIA FOR STUD DEPTH AND SPACING INDICATED.

3. DOOR JAMBS
PROVIDE DOUBLE 20 GA. STUDS AT ALL DOOR OPENINGS, EXTEND FROM FLOOR TO STRUCTURE ABOVE. TYPICAL FOR ALL DOORS IN METAL STUD WALLS.

GENERAL NOTES: FIRE RATED ASSEMBLIES

1. ALL FIRE-RATED ASSEMBLIES TO EXTEND FROM TOP OF SLAB TO UNDERSIDE OF STRUCTURE. SEAL TOP OF ASSEMBLY TO THE UNDERSIDE OF METAL DECK OR STEEL BEAM AS REQUIRED TO ACHIEVE FIRE PROTECTION RATING.
2. AT GWB/STUD FIRE RATED ASSEMBLIES, INSTALL FRAMING AND GYPSUM WALL BOARD TO OFFSET AROUND STRUCTURAL MEMBERS OR OTHER OBSTRUCTIONS TO MAINTAIN ACOUSTICAL OR FIRE RATINGS (IF ACOUSTICAL PARTITION IS ALSO FIRE-RATED). SEE DETAILS AT SHEET **A0.50**.
3. SEAL BOTTOM OF WALL TO CONCRETE SLAB TO ACHIEVE FIRE PROTECTION RATING. SEE DETAILS AT SHEET **A0.50**.
4. REFER TO SPECIFICATIONS FOR FIRE-RATED JOINT SYSTEMS FOR FIRE-RATED SEALANTS AND FIRESTOP CAULKING.
5. INSTALL FRAMING AND GWB TO OFFSET AROUND STRUCTURAL MEMBERS OR OTHER PENETRATIONS OF FIRE-RATED ASSEMBLIES TO MAINTAIN FIRE RESISTIVE RATINGS PER UL APPROVED DETAIL.

ASSEMBLY PRIORITY LEGEND

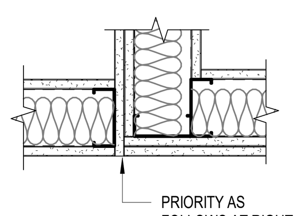

PROVIDE RATED ASSEMBLIES IN ACCORDANCE WITH UL LISTING, MFR. INSTRUCTIONS & APPROVED DETAILS INDICATING HOURS OF FIRE RESISTANCE. REFER TO LIFE SAFETY PLANS, PLANS & ENLARGED PLANS FOR PARTITION TYPES, LOCATIONS & EXTENT OF RATED WALLS.

PRIORITY OF RATED ASSEMBLIES:

• TWO HOUR FIRE & SMOKE WALL	PRIORITY 1 - HIGHEST
• TWO HOUR FIRE WALL	PRIORITY 2
• TWO HOUR SHAFT WALL	PRIORITY 3
• ONE HOUR FIRE & SMOKE WALL	PRIORITY 4
• ONE HOUR FIRE WALL	PRIORITY 5
• ONE HOUR SHAFT WALL	PRIORITY 6
• NON-RATED	PRIORITY 7 - LOWEST

GENERAL NOTES - FIRE RATED STENCIL

1. APPLY PARTITION LABELS ABOVE THE CEILING ON ALL RATED AND SMOKE TIGHT ASSEMBLIES. LABEL AS PER ASSEMBLY RATING.
2. COLOR TO BE BRIGHT RED. MINIMUM TEXT SIZE AS REQUIRED BY LOCAL AUTHORITIES HAVING JURISDICTION.
3. APPLY LABEL AT BEGINNING AND END OF EACH LENGTH OF ASSEMBLY AND APPLY LABEL INTERMITTENTLY BETWEEN END/BEGINNING AT MINIMUM SPACING OF 12'-0" O.C.
4. ARROWS TO BE CONTINUOUS AROUND ASSEMBLY.
5. FIRE/SMOKE DAMPER ACCESS AND OTHER MECHANICAL ELEMENTS SHALL BE IDENTIFIED AS PER ***IBC 2018 SECTION 717.4***. ALL OTHER IDENTIFIERS SHALL BE IN COMPLIANCE WITH THE IBC AND ALL OTHER APPLICABLE CODES AND MUNICIPALITY REQUIREMENTS.
6. REPAIR/PATCH EXISTING FIRE RATED PARTITION LABELS AS NECESSARY
7. PAINT OVER EXISTING FIRE RATED PARTITION LABELS AND ARROWS SO AS TO COMPLETELY COVER ALL INDICATION OF A FIRE RATING FOR ASSEMBLIES THAT WILL NOT RETAIN A FIRE RATING IN THE PROPOSED NEW DESIGN.

FIRE RATED STENCIL DETAIL

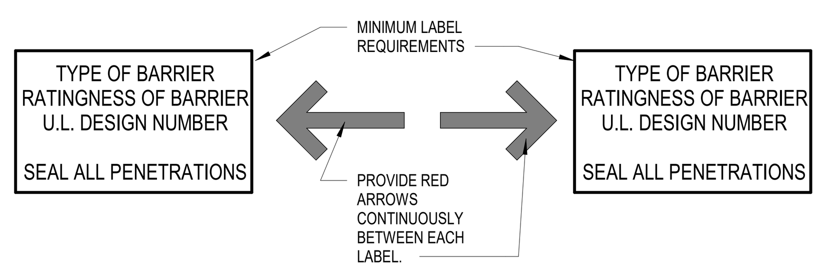

GENERAL NOTES: GYPSUM WALLBOARD

1. DO NOT INSTALL GYPSUM WALLBOARD IN DIRECT CONTACT WITH THE FLOOR. ALL GWB SHALL BE SHIMMED 1/2" ABOVE FLOOR SLAB WITH NON-POROUS SHIM. PLASTIC NON-POROUS HORSESHOE SHIMS ARE RECOMMENDED; GYPSUM WALLBOARD SHIMS ARE NOT ACCEPTABLE. PROVIDE BACKER ROD & CONTINUOUS ACOUSTICAL OR FIRE RATED SEALANT TOOLED FOR HOURGLASS SHAPE PER MFR'S RECOMMENDATIONS.
2. WHERE GYPSUM WALL BOARD EXTENDS TO THE UNDERSIDE OF STRUCTURE, STOP GYPSUM WALL BOARD 1/2" BELOW LINE OF STRUCTURE AND SEAL AS REQUIRED.
3. TYPICAL AT ALL INTERIOR PARTITIONS, GYPSUM WALLBOARD TO BE 5/8" TYPE "X" UNLESS NOTED OTHERWISE AT PARTITION TYPE MODIFIER OR AS SCHEDULED IN SPECIFICATION.
4. TYPICAL AT ALL EXTERIOR PERIMETER WALLS, INSTALL 5/8" TYPE "X" MOLD AND MOISTURE RESISTANT GYPSUM WALLBOARD.
5. STAGGER JOINTS AT INSTALLATIONS OF MULTIPLE LAYERS OF GYPSUM WALLBOARD.

GENERAL NOTES: GYPSUM WALLBOARD REVEALS

1. STANDARD, WHERE INDICATED IN THESE DOCUMENTS, PROVIDE REVEALS OF TYPE AND SIZE INDICATED AS SPECIFIED.
2. ELEVATIONS MAY NOT SHOW ALL FACES OF COLUMNS OR FACES OF EVERY WALL - G.C. SHALL ASSUME THAT ALL REVEALS WILL RETURN TO INSIDE CORNER UNLESS OTHERWISE NOTED.
3. AT ALL INTERSECTIONS OF VERTICAL AND HORIZONTAL REVEALS, PROVIDE FACTORY FABRICATED INTERSECTIONS AND CORNERS.

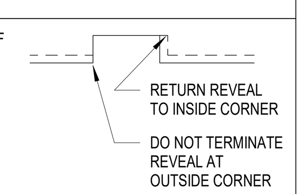

GENERAL NOTES: NON-RATED & ACOUSTICAL PARTITIONS/ASSEMBLIES

1. ALL INTERIOR PARTITIONS TO EXTEND 6" ABOVE CEILING HEIGHT UNLESS NOTED OTHERWISE BY PARTITION TYPE HEAD CONDITION SCHEDULE. SEE PLAN FOR PARTITION IDENTIFICATION.
2. ALL ACOUSTIC PARTITIONS TO EXTEND FROM TOP OF SLAB TO UNDERSIDE OF STRUCTURE. SEAL TOP AND BOTTOM TYPICAL TO THE UNDERSIDE OF METAL DECK OR STEEL BEAM AS REQUIRED TO ACHIEVE ACOUSTIC OR FIRE PROTECTION RATING. SEE DETAILS AT SHEET **A0.50**. INSTALL FRAMING AND GYPSUM WALL BOARD TO OFFSET AROUND STRUCTURAL MEMBERS OR OTHER OBSTRUCTIONS TO MAINTAIN ACOUSTICAL OR FIRE RATINGS (IF ACOUSTICAL PARTITION IS ALSO FIRE-RATED).
3. ALL INTERIOR METAL STUD PARTITIONS TO HAVE SOUND BATTS INSULATION UNLESS NOTED OTHERWISE BY PARTITION MODIFIER. AT 3 5/8" STUD CAVITIES, PROVIDE 3 1/2" SOUND BATTS. AT 6" OR 8" STUD CAVITIES PROVIDE 5 1/2" SOUND BATTS.
4. ALL PARTITIONS CONTAINING PLUMBING PIPING SHALL BE THERMALLY INSULATED WITH MINERAL WOOL.
5. THE FOLLOWING LIST OF ROOMS (IF USED) SHALL HAVE THEIR PERIMETER PARTITIONS INSULATED USING MINERAL WOOL: ELECTRICAL ROOMS, MECHANICAL ROOMS, AV EQUIPMENT ROOMS, DATA OR TELECOM ROOMS, SPRINKLER RISER ROOMS AND FIRE PUMP ROOMS.
6. WHERE NOTED, PROVIDE RESILIENT CHANNELS AT CORRIDOR SIDE OF WALL. SEE PARTITION TYPE DETAILS AND SPECIFICATIONS FOR INSTALLATION GUIDELINES.

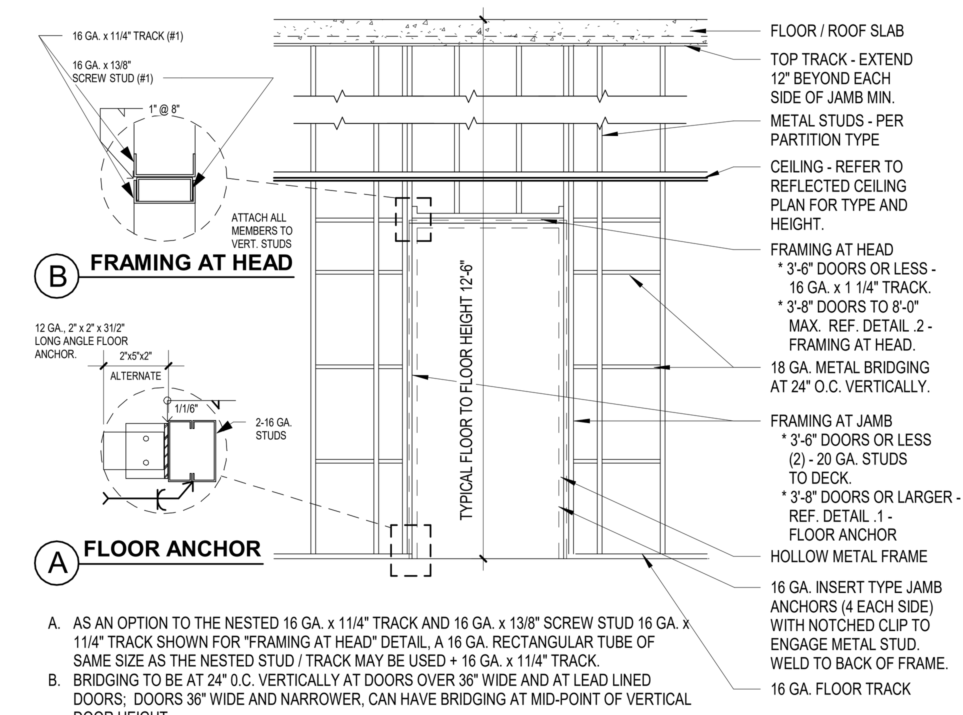

A. AS AN OPTION TO THE NESTED 16 GA. x 11/4" TRACK AND 16 GA. x 13/8" SCREW STUD 16 GA. x 11/4" TRACK SHOWN FOR "FRAMING AT HEAD" DETAIL, A 16 GA. RECTANGULAR TUBE OF SAME SIZE AS THE NESTED STUD / TRACK MAY BE USED + 16 GA. x 11/4" TRACK.
B. BRIDGING TO BE AT 24" 0.C. VERTICALLY AT DOORS OVER 36" WIDE AND AT LEAD LINED DOORS; DOORS 36" WIDE AND NARROWER, CAN HAVE BRIDGING AT MID-POINT OF VERTICAL DOOR HEIGHT.

3 GENERAL - DOOR FRAMING REINFORCING
1" = 1'-0"

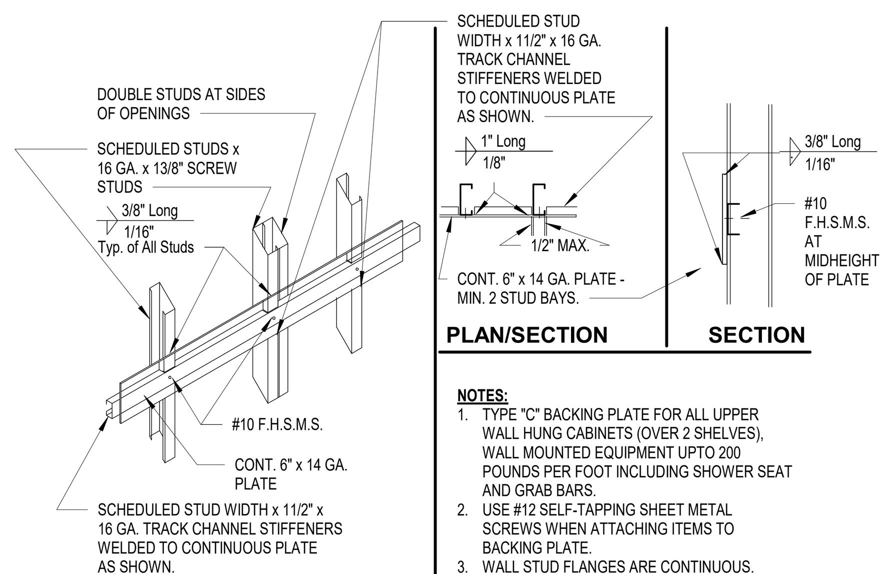

TYPE "C" BACKING PLATE

NOTES:
1. TYPE "C" BACKING PLATE FOR ALL UPPER WALL HUNG CABINETS (OVER 2 SHELVES), WALL MOUNTED EQUIPMENT UPTO 200 POUNDS PER FOOT INCLUDING SHOWER SEAT AND GRAB BARS.
2. USE #12 SELF-TAPPING SHEET METAL SCREWS WHEN ATTACHING ITEMS TO BACKING PLATE.
3. WALL STUD FLANGES ARE CONTINUOUS.

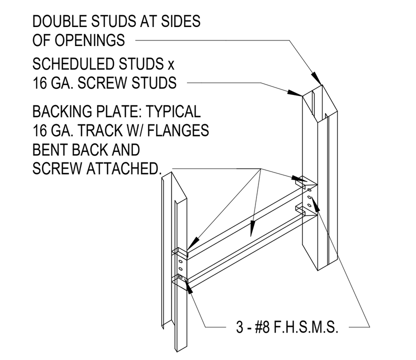

TYPE "B" BACKING PLATE

NOTES:
1. TYPE "B" BACKING PLATE FOR UPPER WALL HUNG CABINETS (UP TO 2 SHELVES), BASE CABINETS, FULL HEIGHT CABINETS, FILM VIEWING COUNTERS, WALL HUNG BENCHES, HANDRAILS, GUARDRAILS, AND WALL HUNG EQUIPMENT - MAXIMUM WEIGHT 100 POUNDS
2. VERIFY LENGTH, HEIGHT, LOCATION OF BACKING PLATE AND NUMBER REQUIRED WITH MANUFACTURER OF ITEMS IN NOTE 1.
3. USE #12 SELF-TAPPING SHEET METAL SCREWS WHEN ATTACHING ITEMS TO BACKING PLATE.
4. WALL STUD FLANGES ARE CONTINUOUS.

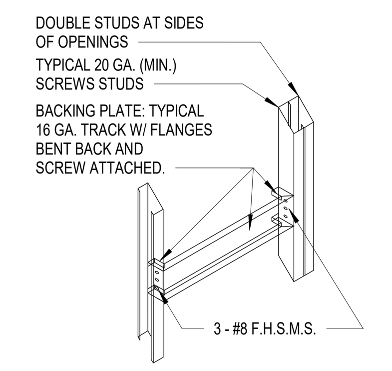

TYPE "A" BACKING PLATE

NOTES:
1. TYPE "A" BACKING PLATE FOR MISC. ITEMS; I.E. SURFACE MOUNTED MIRRORS, WASTE RECEPTACLES, TOWEL DISPENSERS, CHAIR RAILS, ETC. MAXIMUM WEIGHT 50 POUNDS
2. VERIFY LENGTH, HEIGHT, LOCATION OF BACKING PLATE AND NUMBER REQUIRED WITH ACCESSORY MANUFACTURER.
3. USE #12 SELF-TAPPING SHEET METAL SCREWS WHEN ATTACHING ITEMS TO BACKING PLATE.
4. WALL STUD FLANGES ARE CONTINUOUS.

6 BACKING PLATE AND CONNECTION DETAILS
1" = 1'-0"

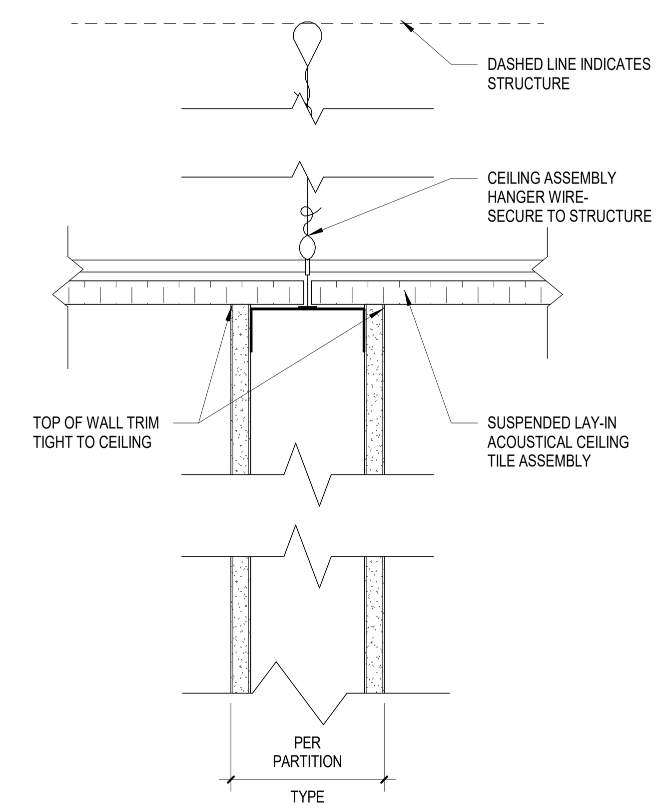

4 PARTIAL HEIGHT WALL
3" = 1'-0"

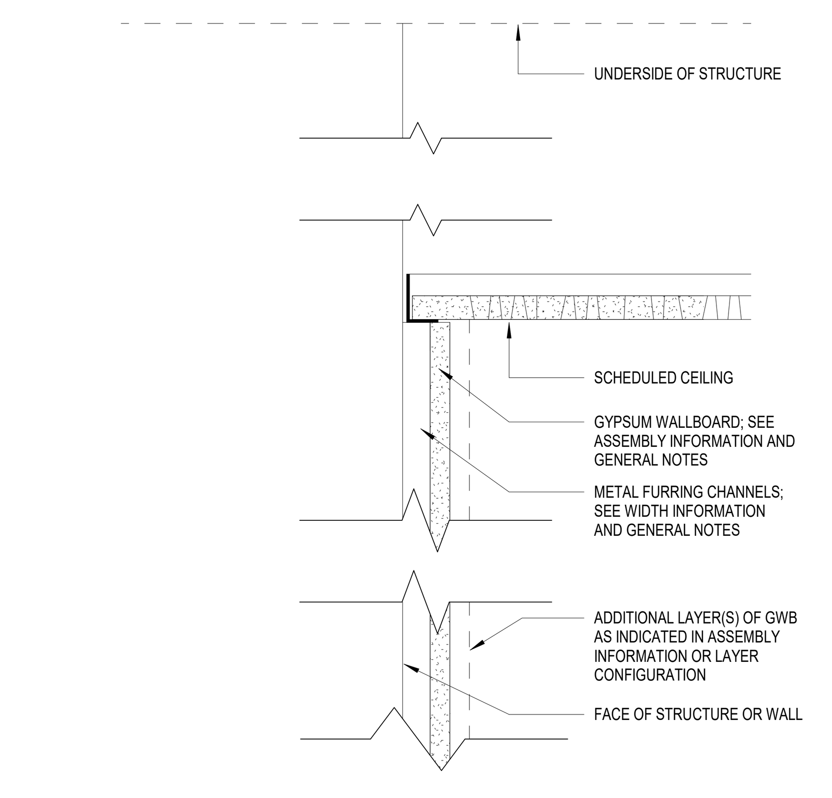

1 PARTIAL HEAD DTL - F - TO UNDERSIDE OF CEILING
3" = 1'-0"

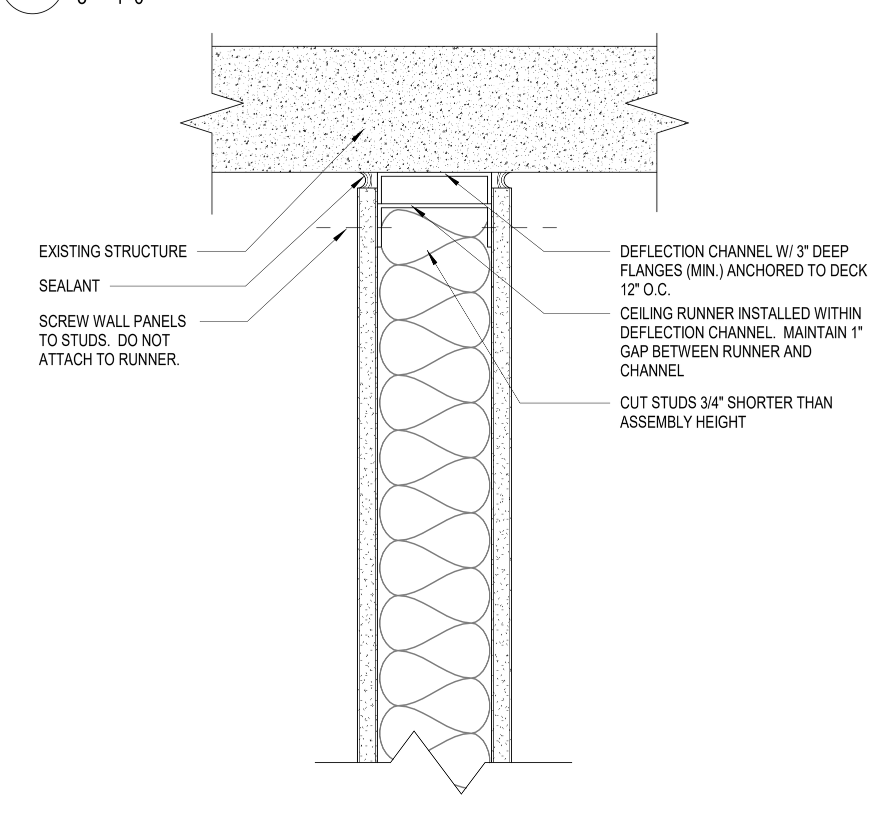

5 TOP OF WALL TO UNDERSIDE OF DECK
3" = 1'-0"

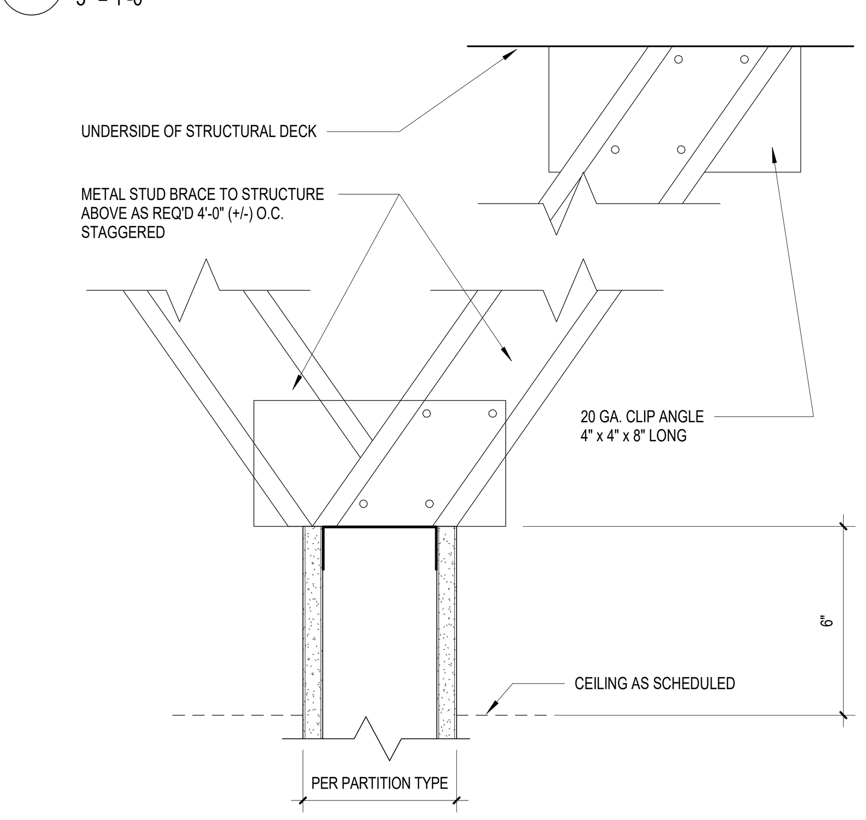

2 PARTIAL HEAD DTL - M1 - STUD/GWB TO 6" ABOVE CEILING
3" = 1'-0"

M1

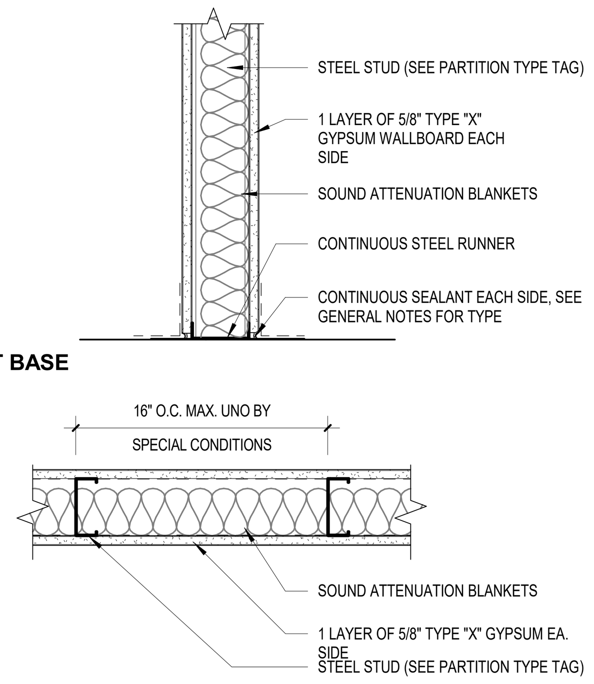

PLAN DETAIL

G1

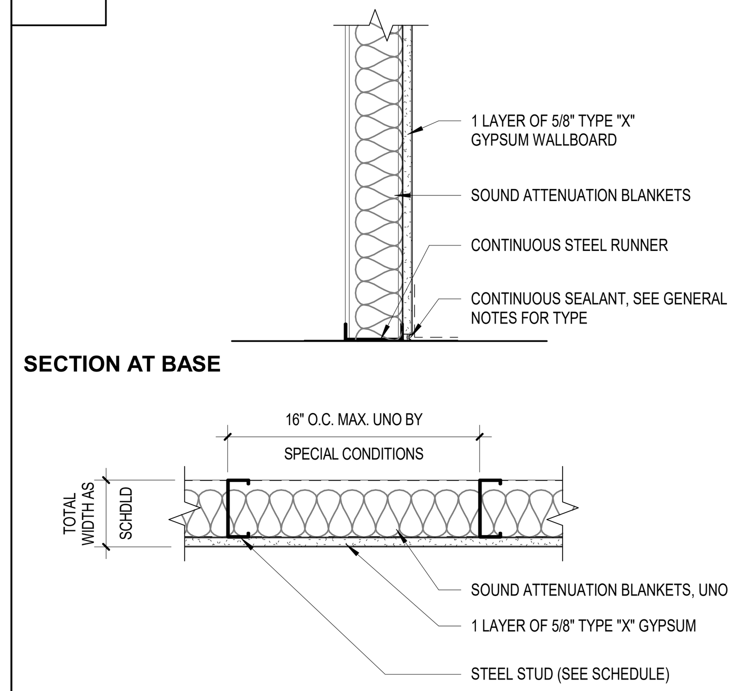

PLAN DETAIL

F1

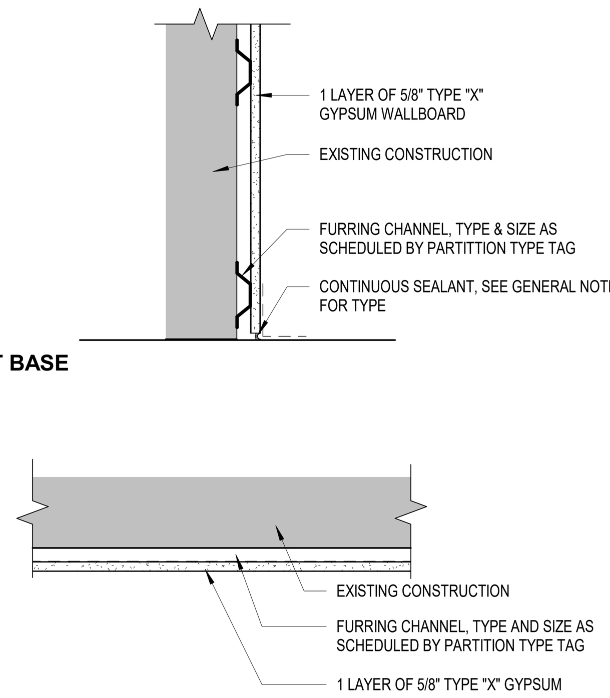

PLAN DETAIL

SSOE
S&W

PROFESSIONAL SEALS:

SOUTH CAROLINA SSOE, INC No. 746 CERTIFICATE OF AUTHORIZATION
STATE OF SOUTH CAROLINA WILLIAM J. FLEMING Columbia, SC No. 3209 REGISTERED ARCHITECT
8.6.2021

SUBMITTAL/REVISION SCHEDULE:

NO.	DATE	DESCRIPTION
	8.06.2021	CONSTRUCTION DOCUMENTS

■ APPROVED FOR CONSTRUCTION
□ NOT APPROVED FOR CONSTRUCTION

CLIENT INFORMATION:

SOUTH CAROLINA EDUCATION LOTTERY

South Carolina Education Lottery®

CLIENT PROJECT #:	20048.00
SCEL PROJECT #:	Y20-N001-CB

PROJECT INFORMATION:

4TH FLOOR UPFIT

1333 MAIN STREET, COLUMBIA, SOUTH CAROLINA

SSOE/SW PROJECT #:	021-00531-00
SSOE/SW MANAGER:	BILL FLEMING

SSOE | STEVENS & WILKINSON
1501 Main Street, Suite 730
Columbia, SC 29201
T. (803) 765-0320

THIS DRAWING IS THE PROPERTY OF SSOE | STEVENS & WILKINSON. UNAUTHORIZED USE OF ANY KIND, INCLUDING USE ON OTHER PROJECTS, IS PROHIBITED.
© SSOE, INC. 2021

PARTITION TYPES & DETAILS

A0.50

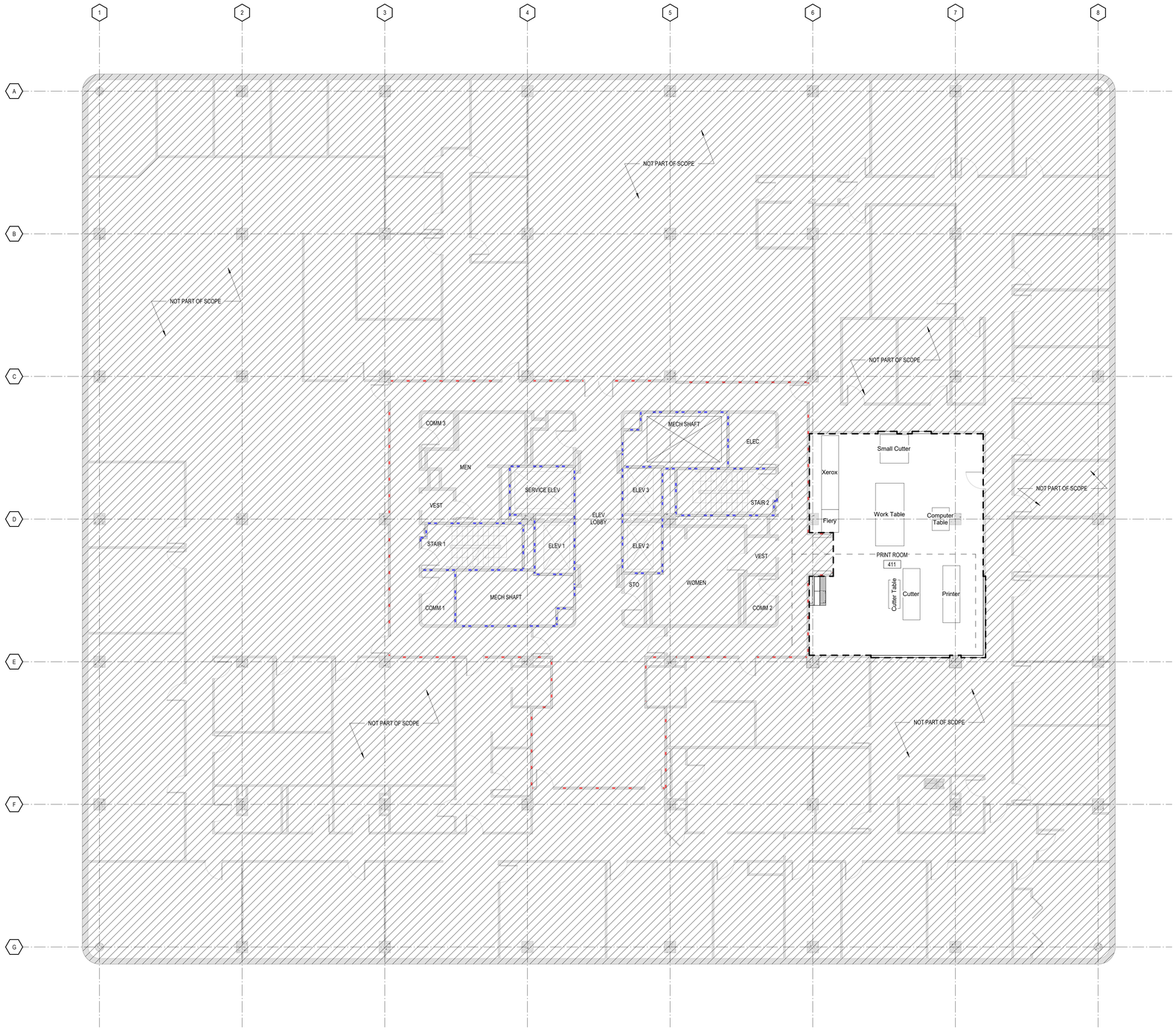

1 4TH FLOOR OVERALL PLAN
1/8" = 1'-0"

GENERAL FLOOR PLAN NOTES

1. ACCESS DOORS SHALL BE INSTALLED IN WALLS AT ALL EQUIPMENT, VALVE OR OTHER LOCATIONS REQUIRING ACCESS FOR MAINTENANCE WHICH ARE LOCATED BEHIND FINISHED SURFACES. SEE SPECIFICATIONS FOR SPECIFIC REQUIREMENTS AND DIRECTIONS.
2. INSTALL GYPSUM WALLBOARD CONTROL JOINTS IN ACCORDANCE WITH ASTM C-840. (WHERE A PARTITION'S LENGTH RUNS IN AN UNINTERRUPTED STRAIGHT PLAN EXCEEDING 30 LINEAR FEET, CONTROL JOINTS SHALL BE INSTALLED 30'-0" ON CENTER MAXIMUM. INSTALL CONTROL JOINTS ALIGNED WITH DOOR JAMBS AND OR EDGE OF SOFFITS WHERE-EVER POSSIBLE. ALL GWB CONTROL JOINT LOCATIONS FOR WALLS AND SOFFITS SHALL MARKED UP ON SHOP DRAWINGS AND SUBMITTED TO THE ARCHITECT FOR APPROVAL PRIOR TO INSTALLATION.
3. WHERE ADJACENT WALLS HAVE DISSIMILAR # OF LAYERS OF GWB, INSTALL FINAL LAYERS OF GWB FLUSH.

DRAWING CONVENTIONS LEGEND

- EXISTING CONSTRUCTION
- NEW NON RATED METAL STUDS CONSTRUCTION
- EXISTING 1 HOUR RATED METAL STUDS CONSTRUCTION
- EXISTING 2 HOUR RATED METAL STUDS CONSTRUCTION
- CENTERLINE
- BUILDING ELEMENTS ABOVE
- 23.4 — EXISTING COLUMN GRID REFERENCE
- ALIGN — ALIGNMENT REFERENCE

REFERENCE CONVENTIONS

LEVEL 1 / 0'-0" — NAME OF ELEVATION/LEVEL; PROJECT ELEVATION

ELEVATION (FLOOR/LEVEL) REFERENCE

Name / 150 SF / 101 / 500 / ZONE — NAME (AT OCCUPANT COUNT PLANS AND LIFE SAFETY PLANS, THIS IS THE OCCUPANT LOAD FACTOR TYPE); SQUARE FOOTAGE; NUMBER (IF USED); OCCUPANT LOAD COUNT (IF USED); ZONE (IF USED)

AREA REFERENCE

Room name / 101 / 150 SF — ROOM NAME; ROOM NUMBER; AREA (IF USED)

ROOM REFERENCE

A## — CORE AND FINISH CONFIGURATION; CORE AND FINISH SIZE; SPECIAL CONDITIONS (IF USED)

4W — PARTITION RATING *NOTED ON LIFE SAFETY PLANS

*SEE PARTITION SHEET FOR MORE INFO

PARTITION TYPE IDENTIFICATION

GWB@20'-4" — CEILING ELEVATION; CEILING MATERIAL

20'-4 1/2" — CEILING ELEVATION

CEILING TYPE IDENTIFICATION

DOOR # - SEE DOOR SCHEDULE

60 — DOOR & FRAME RATING IN MINUTES

DOOR IDENTIFICATION

F01 — FURNITURE/EQUIPMENT ITEM NO. SEE SCHEDULE FOR MORE INFO

FURNITURE/EQUIPMENT IDENTIFICATION

B222 / 27X24X28 — ELEVATION MARKER, SEE ELEVATIONS ON SHEET A10.01; SIZE (WIDTH x DEPTH x HEIGHT)

CASEWORK IDENTIFICATION

TRUE NORTH / PROJECT NORTH

PROFESSIONAL SEALS:

SOUTH CAROLINA — SSOE, INC No. 746 — CERTIFICATE OF AUTHORIZATION

STATE OF SOUTH CAROLINA — WILLIAM J. FLEMING, Columbia SC, No. 3452 — REGISTERED ARCHITECT — 8-6-2021

SUBMITTAL/REVISION SCHEDULE:

NO.	DATE	DESCRIPTION
	8.06.2021	CONSTRUCTION DOCUMENTS

■ APPROVED FOR CONSTRUCTION
□ NOT APPROVED FOR CONSTRUCTION

CLIENT INFORMATION:

SOUTH CAROLINA EDUCATION LOTTERY

CLIENT PROJECT #:	20048.00
SCEL PROJECT #:	Y20-N001-CB

PROJECT INFORMATION:

4TH FLOOR UPFIT

1333 MAIN STREET, COLUMBIA, SOUTH CAROLINA

SSOE/SW PROJECT #:	021-00531-00
SSOE/SW MANAGER:	BILL FLEMING

SSOE | STEVENS & WILKINSON
1501 Main Street, Suite 730
Columbia, SC 29201
T. (803) 765-0320

THIS DRAWING IS THE PROPERTY OF SSOE | STEVENS & WILKINSON. UNAUTHORIZED USE OF ANY KIND, INCLUDING USE ON OTHER PROJECTS, IS PROHIBITED.
© SSOE, INC. 2021

4TH FLOOR OVERALL PLAN

A1.40

C:\Autodesk\Revit\2004800 - Arch - SC Education Lottery Upfit - Adjusted Scope - V19.2_lbajarias@ssoe.com.rvt :**FILE PATH**
10/20/2021 3:08:29 PM :**PRINT DATE**

1 LEVEL 4 FLOOR PLAN
1/4" = 1'-0"

DRAWING REFERENCE SYMBOLS

DRAWING # ON SHEET
DRAWING TITLE
1 DRAWING NAME
1/8" = 1'-0"
DRAWING SCALE

DRAWING IDENTIFICATION ON SHEET

DRAWING # ON SHEET
SHEET # ON WHICH DRAWING CAN BE FOUND

EXTERIOR ELEVATION REFERENCE

DRAWING # ON SHEET
SHEET # ON WHICH DRAWING CAN BE FOUND

INTERIOR ELEVATION REFERENCE

DRAWING # ON SHEET
SHEET # ON WHICH DRAWING CAN BE FOUND

BUILDING SECTION REFERENCE

DRAWING # ON SHEET
SHEET # ON WHICH DRAWING CAN BE FOUND

WALL SECTION REFERENCE

DRAWING # ON SHEET
SHEET # ON WHICH DRAWING CAN BE FOUND

DETAIL SECTION REFERENCES

AREA DETAILED
DRAWING # ON SHEET
SHEET # ON WHICH DRAWING CAN BE FOUND

REFERENCE CONVENTIONS

LEVEL 1
0'-0"
NAME OF ELEVATION/LEVEL
PROJECT ELEVATION

ELEVATION (FLOOR/LEVEL) REFERENCE

Name
150 SF
101
555
ZONE
NAME (AT OCCUPANT COUNT PLANS AND LIFE SAFETY PLANS, THIS IS THE OCCUPANT LOAD FACTOR TYPE)
SQUARE FOOTAGE
NUMBER (IF USED)
OCCUPANT LOAD COUNT (IF USED)
ZONE (IF USED)

AREA REFERENCE

Room name
101
150 SF
ROOM NAME
ROOM NUMBER
AREA (IF USED)

ROOM REFERENCE

A##
CORE AND FINISH CONFIGURATION
CORE AND FINISH SIZE
SPECIAL CONDITIONS (IF USED)

4W
PARTITION RATING
*NOTED ON LIFE SAFETY PLANS

SEE PARTITION SHEET FOR MORE INFO

PARTITION TYPE IDENTIFICATION

GWB820'-4"
CEILING ELEVATION
CEILING MATERIAL
20'-4 1/2"
CEILING ELEVATION

CEILING TYPE IDENTIFICATION

DOOR # - SEE DOOR SCHEDULE
DOOR & FRAME RATING IN MINUTES

DOOR IDENTIFICATION

F01
FURNITURE/EQUIPMENT ITEM NO. SEE SCHEDULE FOR MORE INFO

FURNITURE/EQUIPMENT IDENTIFICATION

B222
27x24x36
ELEVATION MARKER, SEE ELEVATIONS ON SHEET A10.01
SIZE (WIDTH x DEPTH x HEIGHT)

CASEWORK IDENTIFICATION

GENERAL FLOOR PLAN NOTES

1. ACCESS DOORS SHALL BE INSTALLED IN WALLS AT ALL EQUIPMENT, VALVE OR OTHER LOCATIONS REQUIRING ACCESS FOR MAINTENANCE WHICH ARE LOCATED BEHIND FINISHED SURFACES. SEE SPECIFICATIONS FOR SPECIFIC REQUIREMENTS AND DIRECTIONS.
2. INSTALL GYPSUM WALLBOARD CONTROL JOINTS IN ACCORDANCE WITH ASTM C-840. (WHERE A PARTITION'S LENGTH RUNS IN AN UNINTERRUPTED STRAIGHT PLAN EXCEEDING 30 LINEAR FEET, CONTROL JOINTS SHALL BE INSTALLED 30'-0" ON CENTER MAXIMUM. INSTALL CONTROL JOINTS ALIGNED WITH DOOR JAMBS AND OR EDGE OF SOFFITS WHERE-EVER POSSIBLE. ALL GWB CONTROL JOINT LOCATIONS FOR WALLS AND SOFFITS SHALL MARKED UP ON SHOP DRAWINGS AND SUBMITTED TO THE ARCHITECT FOR APPROVAL PRIOR TO INSTALLATION.
3. WHERE ADJACENT WALLS HAVE DISSIMILAR # OF LAYERS OF GWB, INSTALL FINAL LAYERS OF GWB FLUSH.

GENERAL NOTES - ACCESSIBILITY

1. ALL PLUMBING UNDER LAVATORIES SHALL BE INSULATED SUCH THAT NO HOT, SHARP OR ABRASIVE SURFACES CAN CAUSE INJURY. SEE PLUMBING DWGS FOR MORE INFO.
2. LEVER OR PUSH OPERATED DEVICES ARE REQUIRED ON ALL FAUCETS; SELF CLOSING DEVICES ARE PERMITTED PROVIDED THE FAUCET REMAINS OPERATING FOR AT LEAST TEN (10) SECONDS. SEE PLUMBING DWGS FOR MORE INFO.

DRAWING CONVENTIONS LEGEND

EXISTING CONSTRUCTION
NEW NON RATED METAL STUDS CONSTRUCTION
EXISTING 1 HOUR RATED METAL STUDS CONSTRUCTION
EXISTING 2 HOUR RATED METAL STUDS CONSTRUCTION
CENTERLINE
BUILDING ELEMENTS ABOVE
23.4 EXISTING COLUMN GRID REFERENCE
ALIGN ALIGNMENT REFERENCE

GENERAL NOTES: DIMENSION CRITERIA

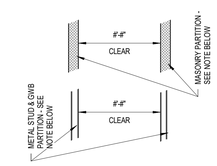

7. CLEAR DIMENSIONS ARE REQUIRED MINIMUM CLEAR WIDTHS BETWEEN FINISH FACES.

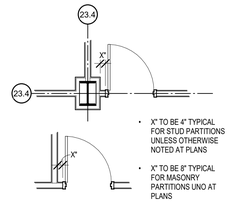

- X" TO BE 4" TYPICAL FOR STUD PARTITIONS UNLESS OTHERWISE NOTED AT PLANS
- X" TO BE 8" TYPICAL FOR MASONRY PARTITIONS UNO AT PLANS

8. FOR OPENINGS IN PARTITIONS OR WALLS:
   A. FOR OPENINGS CENTERED ON A COLUMN CENTERLINE NO DIMENSION WILL BE SHOWN ON THE PLAN, THE WIDTH IS ESTABLISHED BY CRITERIA ABOVE AND BY REQUIRED MINIMUMS FOR ADA CLEARANCE AT STRIKE SIDE OF DOOR.
   B. FOR OPENINGS ADJACENT TO A PARTITION INTERSECTION NO DIMENSION WILL BE SHOWN ON THE PLAN, THE WIDTH IS EASTABLISHED BY CRITERIA ABOVE AND BY REQUIRED MINIMUMS FOR ADA CLEARANCE AT STRIKE SIDE OF DOOR

TRUE NORTH
PROJECT NORTH

C:\Autodesk\Revit\2004800 - Arch - SC Education Lottery Upfit - Adjusted Scope - V19.2_lbajarias@ssoe.com.rvt :FILE PATH
10/20/2021 3:08:31 PM :PRINT DATE

ssoe®
S&W

PROFESSIONAL SEALS:

SOUTH CAROLINA CERTIFICATE OF AUTHORIZATION SSOE, INC No. 746

STATE OF SOUTH CAROLINA WILLIAM J. FLEMING Columbia SC No. 3452 REGISTERED ARCHITECT
8-6-2021

SUBMITTAL/REVISION SCHEDULE:

NO.	DATE	DESCRIPTION
	8.06.2021	CONSTRUCTION DOCUMENTS

■ APPROVED FOR CONSTRUCTION
□ NOT APPROVED FOR CONSTRUCTION

CLIENT INFORMATION:

SOUTH CAROLINA EDUCATION LOTTERY

South Carolina Education Lottery®

CLIENT PROJECT #:	20048.00
SCEL PROJECT #:	Y20-N001-CB

PROJECT INFORMATION:

4TH FLOOR UPFIT

1333 MAIN STREET, COLUMBIA, SOUTH CAROLINA

SSOE/SW PROJECT #:	021-00531-00
SSOE/SW MANAGER:	BILL FLEMING

SSOE | STEVENS & WILKINSON
1501 Main Street, Suite 730
Columbia, SC 29201
T. (803) 765-0320

THIS DRAWING IS THE PROPERTY OF SSOE | STEVENS & WILKINSON. UNAUTHORIZED USE OF ANY KIND, INCLUDING USE ON OTHER PROJECTS, IS PROHIBITED.
© SSOE, INC. 2021

LEVEL 4 FLOOR PLAN

A1.41

MOUNTING HEIGHTS

1. INSTALL ALL ITEMS IN ACCORDANCE WITH THIS DRAWING
2. WHERE DIMENSIONS PROVIDED VARY FROM MANUFACTURER'S RECOMMENDATIONS FOR ADA BARRIER FREE MOUNTING HEIGHTS, THE MANUFACTURER'S RECOMMENDATIONS WILL BE THE STANDARD.
3. DIMENSIONS ARE TO TOP OF FINISH FLOOR
4. MAINTAIN INTEGRITY OF FIRE RATING WHERE ACCESSORIES ARE MOUNTED IN RATED WALLS
5. PROVIDE WOOD BLOCKING FOR ALL ACCESSORIES MOUNTED ON GWB PARTITION.

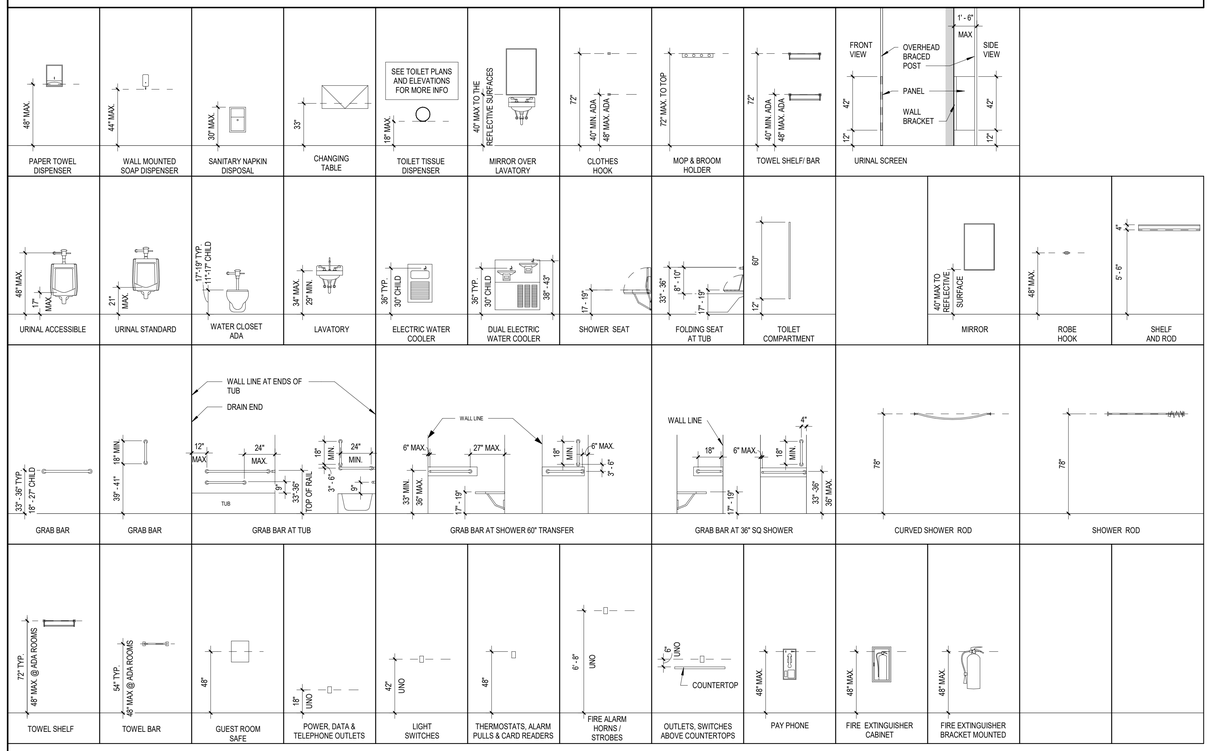

1 TYPICAL MOUNTING HEIGHTS
1/4" = 1'-0"

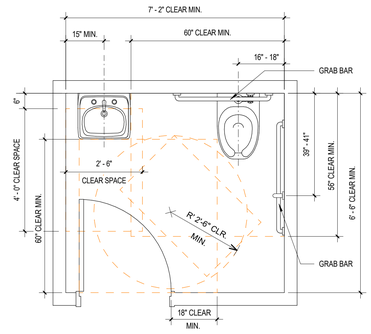

ACCESSIBLE TOILET ROOM

3 MIN. CLEARANCES AT ADA TOILET ROOMS
1/2" = 1'-0"

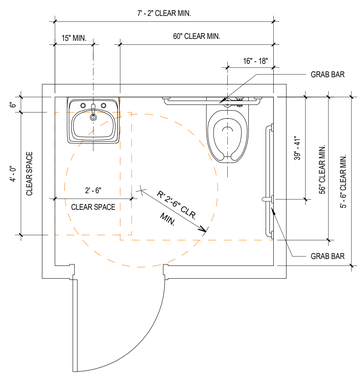

ACCESSIBLE TOILET ROOM

4 MIN. CLEARANCES AT ADA TOILET ROOMS
1/2" = 1'-0"

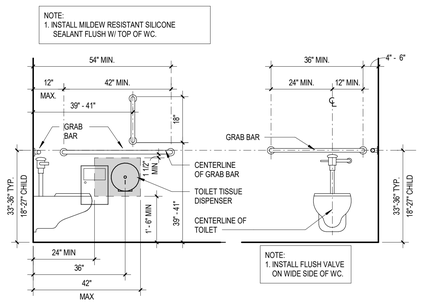

8 ADA TOILET & GRAB BAR ELEVATIONS
1/2" = 1'-0"

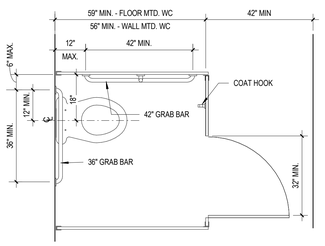

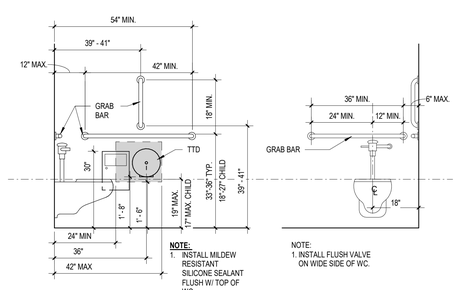

6 ADA TOILET PARTITION PLANS & ELEVATIONS
1/2" = 1'-0"

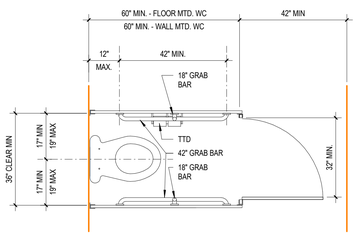

7 ADA AMBULATORY TOILET PARITTION PLANS
1/2" = 1'-0"

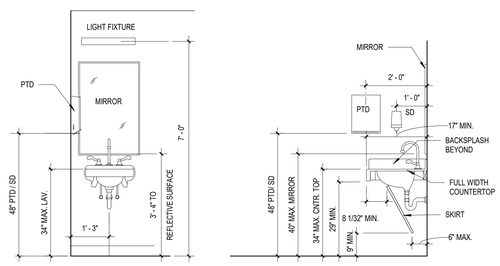

NOTES:
1. 1. INSTALL INSULATED BOOT ON HOT WATER & DRAIN LINES AT ALL WALL MTD. LAVATORIES & COUNTER MOUNTED SINKS.
2. INSTALL MILDEW RESISTANT SILICONE SEALANT FLUSH W/ TOP OF LAVATORY.

9 TYP WALL MOUNTED LAVATORY ELEVATION(S)
1/2" = 1'-0"

SSOE
S&W

PROFESSIONAL SEALS:

SOUTH CAROLINA CERTIFICATE OF AUTHORIZATION SSOE, INC No. 746

STATE OF SOUTH CAROLINA WILLIAM J. FLEMING Columbia SC No. 3452 REGISTERED ARCHITECT
8-6-2021

SUBMITTAL/REVISION SCHEDULE:

NO.	DATE	DESCRIPTION
	8.06.2021	CONSTRUCTION DOCUMENTS

■ APPROVED FOR CONSTRUCTION
□ NOT APPROVED FOR CONSTRUCTION

CLIENT INFORMATION:

SOUTH CAROLINA EDUCATION LOTTERY

South Carolina Education Lottery®

CLIENT PROJECT #:	20048.00
SCEL PROJECT #:	Y20-N001-CB

PROJECT INFORMATION:

4TH FLOOR UPFIT

1333 MAIN STREET, COLUMBIA, SOUTH CAROLINA

SSOE/SW PROJECT #:	021-00531-00
SSOE/SW MANAGER:	BILL FLEMING

SSOE | STEVENS & WILKINSON
1501 Main Street, Suite 730
Columbia, SC 29201
T. (803) 765-0320

THIS DRAWING IS THE PROPERTY OF SSOE | STEVENS & WILKINSON. UNAUTHORIZED USE OF ANY KIND, INCLUDING USE ON OTHER PROJECTS, IS PROHIBITED.
© SSOE, INC. 2021

ANSI ADA ACCESSIBLE DETAILS

A5-00A

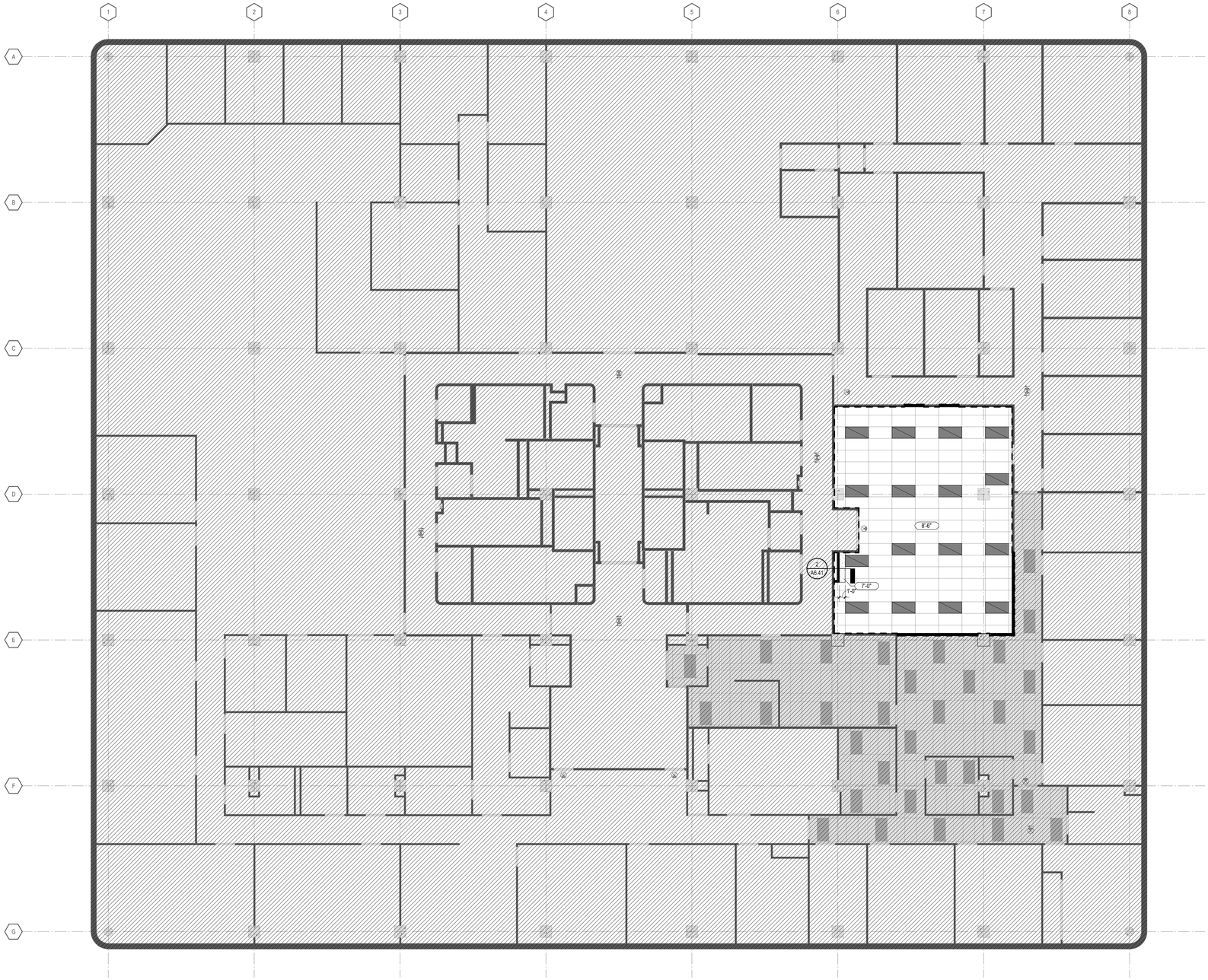

1 LEVEL 4 OVERALL RCP
1/8" = 1'-0"

GENERAL RCP NOTES

1. ALL CEILINGS ARE 8'-6" AFF UNO.
2. LAY CEILING GRIDS AS SHOWN ON REFLECTED CEILING PLANS. EACH ROOM GRID IS PLANNED FOR MAXIMUM TILE SIZE AND OPTIMUM LIGHTING LAYOUT.
3. SEE ELECTRICAL AND MECHANICAL DRAWINGS FOR LIGHTING AND HVAC INFORMATION.
4. NO DEVICES, DAMPERS, VALVES, PUMPS, ETC ARE TO BE LOCATED ABOVE SPACES WITH GWB CEILINGS. WHERE POSSIBLE, ACCESS TO JUNCTION BOXES FOR LIGHTS IS TO BE THROUGH FIXTURES. ALL DEVICES REQUIRING ACCESS ARE TO BE LOCATED IN ADJACENT SPACES WITH ACCESSIBLE CEILING SYSTEMS.
5. REFER TO ELECTRICAL DRAWINGS FOR FULL EXTENT OF EXITING DEVICES, INCLUDING WALL MOUNTED DEVICES.
6. BRACE ALL SUSPENDED CEILINGS FOR SEISMIC RESISTANCE IN ACCORDANCE WITH CODE REQUIREMENTS AND AS DETAILED.
7. ALL CEILING CAVITY AREAS USED AS RETURN AIR PLENUMS SHALL BE CONSTRUCTED WITH FIRE RESISTANT MATERIALS AND SHALL ONLY CONTAIN MATERIALS WHICH HAVE SMOKE DEVELOPED RATINGS NOT GREATER THAN 50 AND FLAME SPREAD RATINGS NOT GREATER THAN 25 AS DETERMINED IN ACCORDANCE WITH ASTM 84.
8. DO NOT USE PVC PIPE IN RETURN AIR PLENUMS.
9. ALL AREAS ABOVE CEILING SHALL BE FREE OF ACCUMULATIONS OF MUD, DUST, DIRT, CONSTRUCTION DEBRIS, ETC. CLEAN TOP SURFACES OF DUCTWORK, LIGHTS, PIPING, CONDUIT, AND OTHER CONSTRUCTION TO PROVIDE CLEAN SURFACE
10. ANY AREA ABOVE CEILING EXPOSED TO VIEW FROM BELOW SHALL BE NO LESS THAN PRIME PAINTED.
11. REPLACE DAMAGED EXISTING CEILING TILES WITHIN INDICATED WORK AREA AS NEEDED.

RCP LEGEND

2' x 4' ACOUSTICAL CEILING PANEL.
SEE CEILING TAG FOR TYPE

2'X5 EXISTING CEILING TO REMAIN

GYPSUM WALLBOARD CEILING

EXIT LIGHT FIXTURE - NEW
SEE ELECTRICAL DWGS.

EXIT LIGHT FIXTURE - EXISTING TO REMAIN
SEE ELECTRICAL DWGS.

NEW 2X4 TROFFER
SEE ELECTRICAL DWGS.

EXISTING 2X4 TROFFER TO REMAIN
SEE ELECTRICAL DWGS.

PROFESSIONAL SEALS:

SOUTH CAROLINA
SSOE, INC
No. 746
CERTIFICATE OF AUTHORIZATION

STATE OF SOUTH CAROLINA
WILLIAM J. FLEMING
Columbia, SC
No. 3452
REGISTERED ARCHITECT

8-6-2021

SUBMITTAL/REVISION SCHEDULE:

NO.	DATE	DESCRIPTION
	8.06.2021	CONSTRUCTION DOCUMENTS

■ APPROVED FOR CONSTRUCTION
□ NOT APPROVED FOR CONSTRUCTION

CLIENT INFORMATION:

SOUTH CAROLINA EDUCATION LOTTERY

CLIENT PROJECT #:	20048.00
SCEL PROJECT #:	Y20-N001-CB

PROJECT INFORMATION:

4TH FLOOR UPFIT

1333 MAIN STREET, COLUMBIA, SOUTH CAROLINA

SSOE/SW PROJECT #:	021-00531-00
SSOE/SW MANAGER:	BILL FLEMING

SSOE | STEVENS & WILKINSON
1501 Main Street, Suite 730
Columbia, SC 29201
T. (803) 765-0320

THIS DRAWING IS THE PROPERTY OF SSOE | STEVENS & WILKINSON. UNAUTHORIZED USE OF ANY KIND, INCLUDING USE ON OTHER PROJECTS, IS PROHIBITED.
© SSOE, INC. 2021

LEVEL 4 OVERALL REFLECTED CEILING PLAN

A6.40

C:\Autodesk\Revit\2004800 - Arch - SC Education Lottery Upfit - Adjusted Scope - V19.2_lbajarias@ssoe.com.rvt :**FILE PATH**
10/20/2021 3:08:34 PM :**PRINT DATE**

1 Level 4 - RCP
1/4" = 1'-0"

GENERAL RCP NOTES

1. ALL CEILINGS ARE 8'-6" AFF UNO.
2. LAY CEILING GRIDS AS SHOWN ON REFLECTED CEILING PLANS. EACH ROOM GRID IS PLANNED FOR MAXIMUM TILE SIZE AND OPTIMUM LIGHTING LAYOUT.
3. SEE ELECTRICAL AND MECHANICAL DRAWINGS FOR LIGHTING AND HVAC INFORMATION.
4. NO DEVICES, DAMPERS, VALVES, PUMPS, ETC ARE TO BE LOCATED ABOVE SPACES WITH GWB CEILINGS. WHERE POSSIBLE, ACCESS TO JUNCTION BOXES FOR LIGHTS IS TO BE THROUGH FIXTURES. ALL DEVICES REQUIRING ACCESS ARE TO BE LOCATED IN ADJACENT SPACES WITH ACCESSIBLE CEILING SYSTEMS.
5. REFER TO ELECTRICAL DRAWINGS FOR FULL EXTENT OF EXITING DEVICES, INCLUDING WALL MOUNTED DEVICES.
6. BRACE ALL SUSPENDED CEILINGS FOR SEISMIC RESISTANCE IN ACCORDANCE WITH CODE REQUIREMENTS AND AS DETAILED.
7. ALL CEILING CAVITY AREAS USED AS RETURN AIR PLENUMS SHALL BE CONSTRUCTED WITH FIRE RESISTANT MATERIALS AND SHALL ONLY CONTAIN MATERIALS WHICH HAVE SMOKE DEVELOPED RATINGS NOT GREATER THAN 50 AND FLAME SPREAD RATINGS NOT GREATER THAN 25 AS DETERMINED IN ACCORDANCE WITH ASTM 84.
8. DO NOT USE PVC PIPE IN RETURN AIR PLENUMS.
9. ALL AREAS ABOVE CEILING SHALL BE FREE OF ACCUMULATIONS OF MUD, DUST, DIRT, CONSTRUCTION DEBRIS, ETC. CLEAN TOP SURFACES OF DUCTWORK, LIGHTS, PIPING, CONDUIT, AND OTHER CONSTRUCTION TO PROVIDE CLEAN SURFACE
10. ANY AREA ABOVE CEILING EXPOSED TO VIEW FROM BELOW SHALL BE NO LESS THAN PRIME PAINTED.
11. REPLACE DAMAGED EXISTING CEILING TILES WITHIN INDICATED WORK AREA AS NEEDED.

RCP LEGEND

2' x 4' ACOUSTICAL CEILING PANEL. SEE CEILING TAG FOR TYPE

2'X5 EXISTING CEILING TO REMAIN

GYPSUM WALLBOARD CEILING

EXIT LIGHT FIXTURE - NEW SEE ELECTRICAL DWGS.

EXIT LIGHT FIXTURE - EXISTING TO REMAIN SEE ELECTRICAL DWGS.

NEW 2X4 TROFFER SEE ELECTRICAL DWGS.

EXISTING 2X4 TROFFER TO REMAIN SEE ELECTRICAL DWGS.

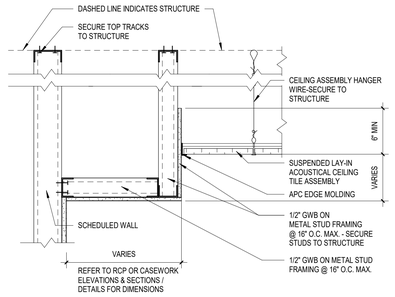

2 GWB SOFFIT DETAIL - APC CLNG
1 1/2" = 1'-0"

ssoe®

S&W

PROFESSIONAL SEALS:

SOUTH CAROLINA CERTIFICATE OF AUTHORIZATION SSOE, INC No. 746

STATE OF SOUTH CAROLINA WILLIAM J. FLEMING Columbia SC No. 3652 REGISTERED ARCHITECT

8-6-2021

SUBMITTAL/REVISION SCHEDULE:

NO.	DATE	DESCRIPTION
	8.06.2021	CONSTRUCTION DOCUMENTS

■ APPROVED FOR CONSTRUCTION
□ NOT APPROVED FOR CONSTRUCTION

CLIENT INFORMATION:

SOUTH CAROLINA EDUCATION LOTTERY

South Carolina Education Lottery®

CLIENT PROJECT #:	20048.00
SCEL PROJECT #:	Y20-N001-CB

PROJECT INFORMATION:

4TH FLOOR UPFIT

1333 MAIN STREET, COLUMBIA, SOUTH CAROLINA

SSOE/SW PROJECT #:	021-00531-00
SSOE/SW MANAGER:	BILL FLEMING

SSOE | STEVENS & WILKINSON
1501 Main Street, Suite 730
Columbia, SC 29201
T. (803) 765-0320

THIS DRAWING IS THE PROPERTY OF SSOE | STEVENS & WILKINSON. UNAUTHORIZED USE OF ANY KIND, INCLUDING USE ON OTHER PROJECTS, IS PROHIBITED.
© SSOE, INC. 2021

LEVEL 4 REFLECTED CEILING PLAN

A6.41

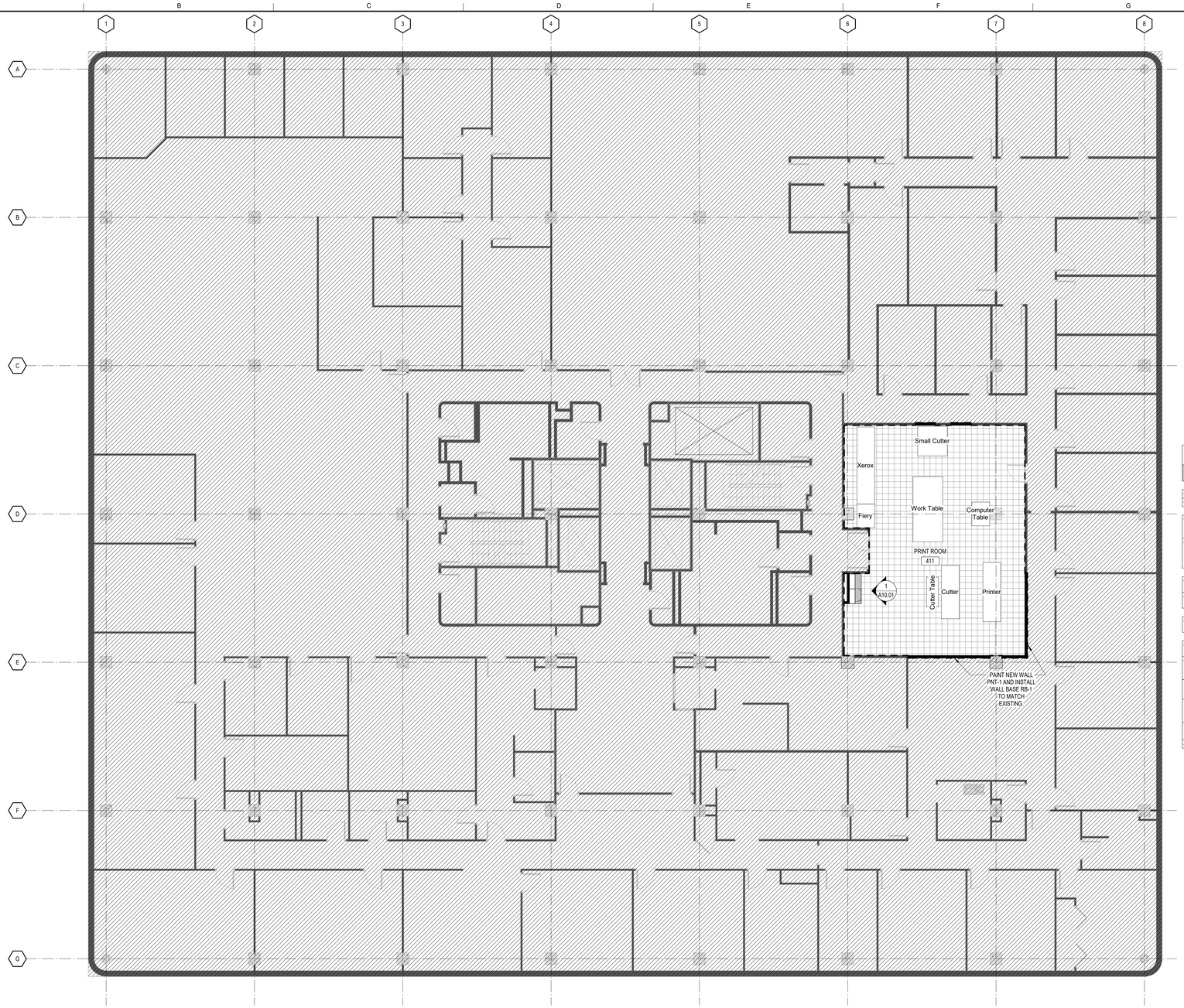

1 4TH FLOOR OVERALL PLAN
1/8" = 1'-0"

GENERAL FINISH NOTES

1. PAINT ALL FERROUS METAL EXPOSED TO MOISTURE, EXCEPT PREFINISHED METAL.
2. PAINT ALL STEEL STAIR SURFACES EXPOSED TO VIEW OR MOISTURE.
3. PAINT ALL NEW EXTERIOR HOLLOW METAL FRAMES AND DOORS IN ACCORDANCE WITH THE PAINTING SPECIFICATIONS AND IN COLOR INDICATED.
4. AT ALL TRANSITIONS BETWEEN DIFFERENT FLOOR FINISH MATERIALS, INSTALL SILLS OR THRESHOLDS AND/OR TERMINATE MATERIALS AS INDICATED ON THE TYPICAL TERMINATIONS DETAIL LEGEND. SEE SHEET **A10.01**.
5. AT ALL MILLWORK BASE CABINETS, PROVIDE BASE AS SCHEDULE FOR ADJACENT WALLS UNO.
6. REMOVE CURING COMPOUNDS FROM ALL CONCRETE SLABS IN ACCORDANCE WITH MANUFACTURER RECOMMENDATIONS PRIOR TO THE INSTALLATION OF ANY FLOOR FINISH MATERIALS.
7. MOISTURE TEST ALL NEW AND EXISTING CONCRETE SLABS ON GRADE PRIOR TO INSTALLATION OF ANY FLOOR FINISH MATERIALS. DO NOT INSTALL FINISHES UNLESS THE MOISTURE EMISSION RATE IS ACCEPTABLE TO THE FINISH MANUFACTURER AND MAINTAINS ALL WARRANTIES. PERFORM TESTS AS SPECIFIED. SCHEDULE SLAB POURS AND TESTS TO ALLOW PROPER CURING AND TESTING TIMES WITHOUT DELAYS TO THE OVERALL SCHEDULE.

FINISH LEGEND

- VCT-1 — 12X12 VINYL COMPOSITION TILE
- CPT-1 — BROADLOOM CARPET
- EXISTING CARPET TO REMAIN — BROADLOOM CARPET
- AREA NOT IN CONTRACT

FINISH LEGEND

SPECIFICATION SECTION	CODE	MANUFACTURER	PATTERN	COLOR	NOTES
064116	PLAM-1	WILSONART	1500-60	GREY	MILLWORK - VERTICAL
064116	PLAM-2	WILSONART	4845-60	TWILIGHT ZEPHER	MILLWORK - HORIZONTAL
095113	ACT-1	ARMSTRONG	MATCH EXISTING	WHITE	2X5 SQUARE LAY-IN ACOUSTICAL TILE .70 NRC OR GREATER
095113	ACT-1 GRID	ARMSTRONG	MATCH EXISTING	WHITE	ALTERNATE SEISMIC C OR D INSTALLATION WITH 7/8" WALL MOLDING AND CLIPS - SEE SITE SEISMIC CATAGORY
096513	RB-1	ROPPE	700 SERIES	177 STEEL BLUE	EXISTING OPEN OFFICE - 4" COVED WALL BASE
096513	RB-2	ROPPE	700 SERIES	640 CREEKBED	PRINT ROOM - 4" COVED WALL BASE
096519	VCT-1	ARMSTRONG	STANDARD EXCELON IMPERIAL TEXTURE	51911 CLASSIC WHITE	12X12 TILES
099123	PNT-1	SHERWIN WILLIAMS	SW7036	ACCESSIBLE BEIGE	EXISTING OPEN OFFICE PAINT - EGG SHELL
099123	PNT-1A	SHERWIN WILLAIMS	SW7036	ACCESSIBLE BEIGE	LIGHT INDUSTRIAL COATING - SW PRO INDUSTRIAL OR EQUAL - MP#151

ROOM FINISH SCHEDULE

ROOM NO.	ROOM NAME	FINISHES				COMMENTS	REV.
		WALLS	CEILINGS	FLOORS	WALL BASE		
LEVEL 4							
411	PRINT ROOM	PNT-1A	ACT-1	VCT-1	RB-2		

ssoe®

S&W

PROFESSIONAL SEALS:

SOUTH CAROLINA — SSOE, INC No. 746 — CERTIFICATE OF AUTHORIZATION

STATE OF SOUTH CAROLINA — WILLIAM J. FLEMING — Columbia SC — No. 3452 — REGISTERED ARCHITECT — 8-6-2021

SUBMITTAL/REVISION SCHEDULE:

NO.	DATE	DESCRIPTION
	8.06.2021	CONSTRUCTION DOCUMENTS

■ APPROVED FOR CONSTRUCTION
□ NOT APPROVED FOR CONSTRUCTION

CLIENT INFORMATION:

SOUTH CAROLINA EDUCATION LOTTERY

South Carolina Education Lottery®

CLIENT PROJECT #:	20048.00
SCEL PROJECT #:	Y20-N001-CB

PROJECT INFORMATION:

4TH FLOOR UPFIT

1333 MAIN STREET, COLUMBIA, SOUTH CAROLINA

SSOE/SW PROJECT #:	021-00531-00
SSOE/SW MANAGER:	BILL FLEMING

SSOE | STEVENS & WILKINSON
1501 Main Street, Suite 730
Columbia, SC 29201
T. (803) 765-0320

THIS DRAWING IS THE PROPERTY OF SSOE | STEVENS & WILKINSON. UNAUTHORIZED USE OF ANY KIND, INCLUDING USE ON OTHER PROJECTS, IS PROHIBITED.

© SSOE, INC. 2021

LEVEL 4 FINISH FLOOR OVERALL PLAN

A9.40

C:\Autodesk\Revit\2004800 - Arch - SC Education Lottery Upfit - Adjusted Scope - V19.2_lbajarias@ssoe.com.rvt :**FILE PATH**
10/20/2021 3:08:37 PM :**PRINT DATE**

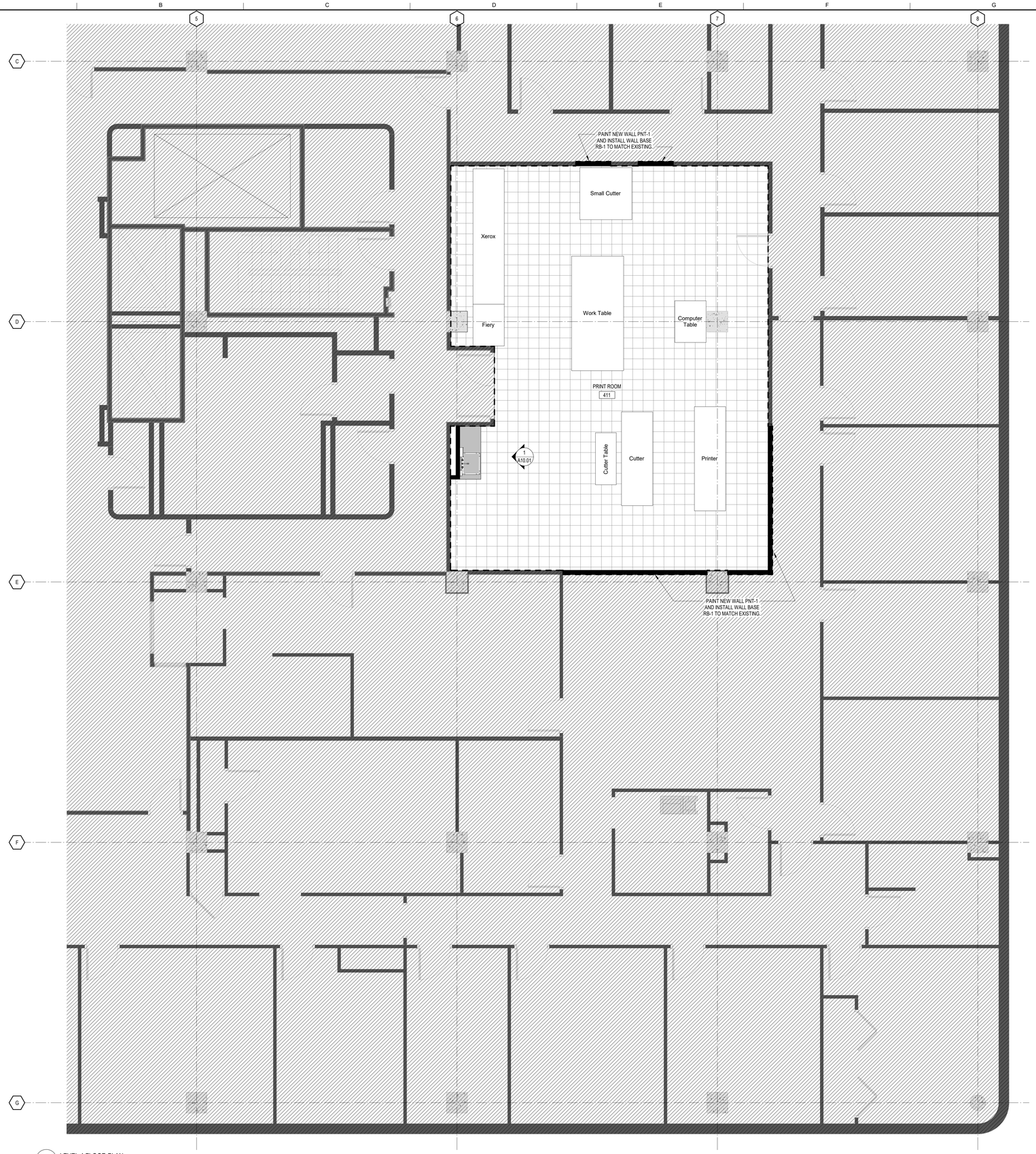

1 LEVEL 4 FLOOR PLAN
1/4" = 1'-0"

GENERAL FINISH NOTES

1. PAINT ALL FERROUS METAL EXPOSED TO MOISTURE, EXCEPT PREFINISHED METAL.
2. PAINT ALL STEEL STAIR SURFACES EXPOSED TO VIEW OR MOISTURE.
3. PAINT ALL NEW EXTERIOR HOLLOW METAL FRAMES AND DOORS IN ACCORDANCE WITH THE PAINTING SPECIFICATIONS AND IN COLOR INDICATED.
4. AT ALL TRANSITIONS BETWEEN DIFFERENT FLOOR FINISH MATERIALS, INSTALL SILLS OR THRESHOLDS AND/OR TERMINATE MATERIALS AS INDICATED ON THE TYPICAL TERMINATIONS DETAIL LEGEND. SEE SHEET **A10.01**.
5. AT ALL MILLWORK BASE CABINETS, PROVIDE BASE AS SCHEDULE FOR ADJACENT WALLS UNO.
6. REMOVE CURING COMPOUNDS FROM ALL CONCRETE SLABS IN ACCORDANCE WITH MANUFACTURER RECOMMENDATIONS PRIOR TO THE INSTALLATION OF ANY FLOOR FINISH MATERIALS.
7. MOISTURE TEST ALL NEW AND EXISTING CONCRETE SLABS ON GRADE PRIOR TO INSTALLATION OF ANY FLOOR FINISH MATERIALS. DO NOT INSTALL FINISHES UNLESS THE MOISTURE EMISSION RATE IS ACCEPTABLE TO THE FINISH MANUFACTURER AND MAINTAINS ALL WARRANTIES. PERFORM TESTS AS SPECIFIED. SCHEDULE SLAB POURS AND TESTS TO ALLOW PROPER CURING AND TESTING TIMES WITHOUT DELAYS TO THE OVERALL SCHEDULE.

FINISH LEGEND

VCT-1
12X12 VINYL COMPOSITION TILE

CPT-1
BROADLOOM CARPET

EXISTING CARPET TO REMAIN
BROADLOOM CARPET

AREA NOT IN CONTRACT

FINISH LEGEND

SPECIFICATION SECTION	CODE	MANUFACTURER	PATTERN	COLOR	NOTES
064116	PLAM-1	WILSONART	1500-60	GREY	MILLWORK - VERTICAL
064116	PLAM-2	WILSONART	4845-60	TWILIGHT ZEPHER	MILLWORK - HORIZONTAL
095113	ACT-1	ARMSTRONG	MATCH EXISTING	WHITE	2X5 SQUARE LAY-IN ACOUSTICAL TILE .70 NRC OR GREATER
095113	ACT-1 GRID	ARMSTRONG	MATCH EXISTING	WHITE	ALTERNATE SEISMIC C OR D INSTALLATION WITH 7/8" WALL MOLDING AND CLIPS - SEE SITE SEISMIC CATAGORY
096513	RB-1	ROPPE	700 SERIES	177 STEEL BLUE	EXISTING OPEN OFFICE - 4" COVED WALL BASE
096513	RB-2	ROPPE	700 SERIES	640 CREEKBED	PRINT ROOM - 4" COVED WALL BASE
096519	VCT-1	ARMSTRONG	STANDARD EXCELON IMPERIAL TEXTURE	51911 CLASSIC WHITE	12X12 TILES
099123	PNT-1	SHERWIN WILLIAMS	SW7036	ACCESSIBLE BEIGE	EXISTING OPEN OFFICE PAINT - EGG SHELL
099123	PNT-1A	SHERWIN WILLAIMS	SW7036	ACCESSIBLE BEIGE	LIGHT INDUSTRIAL COATING - SW PRO INDUSTRIAL OR EQUAL - MP#151

ROOM FINISH SCHEDULE

ROOM NO.	ROOM NAME	FINISHES				COMMENTS	REV.
		WALLS	CEILINGS	FLOORS	WALL BASE		
LEVEL 4							
411	PRINT ROOM	PNT-1A	ACT-1	VCT-1	RB-2		

ssoe®

S&W

PROFESSIONAL SEALS:

SOUTH CAROLINA SSOE, INC No. 746 CERTIFICATE OF AUTHORIZATION

STATE OF SOUTH CAROLINA WILLIAM J. FLEMING Columbia SC No. 3452 REGISTERED ARCHITECT

8-6-2021

SUBMITTAL/REVISION SCHEDULE:

NO.	DATE	DESCRIPTION
	8.06.2021	CONSTRUCTION DOCUMENTS

■ APPROVED FOR CONSTRUCTION
□ NOT APPROVED FOR CONSTRUCTION

CLIENT INFORMATION:

SOUTH CAROLINA EDUCATION LOTTERY

South Carolina Education Lottery®

CLIENT PROJECT #:	20048.00
SCEL PROJECT #:	Y20-N001-CB

PROJECT INFORMATION:

4TH FLOOR UPFIT

1333 MAIN STREET, COLUMBIA, SOUTH CAROLINA

SSOE/SW PROJECT #:	021-00531-00
SSOE/SW MANAGER:	BILL FLEMING

SSOE® | STEVENS & WILKINSON
1501 Main Street, Suite 730
Columbia, SC 29201
T. (803) 765-0320

THIS DRAWING IS THE PROPERTY OF SSOE | STEVENS & WILKINSON. UNAUTHORIZED USE OF ANY KIND, INCLUDING USE ON OTHER PROJECTS, IS PROHIBITED.

© SSOE, INC. 2021

LEVEL 4 FINISH FLOOR PLAN

A9.41

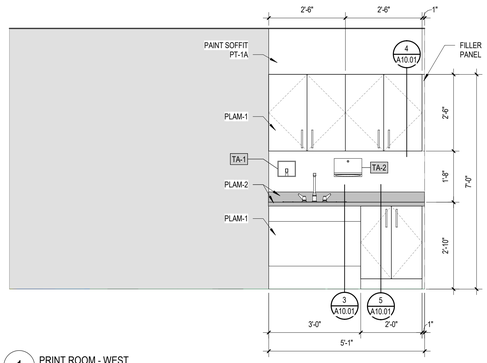

1 PRINT ROOM - WEST
1/2" = 1'-0"

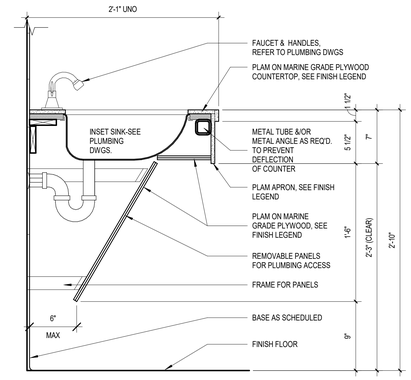

3 BASE SINK CABINET DETAIL
1 1/2" = 1'-0"

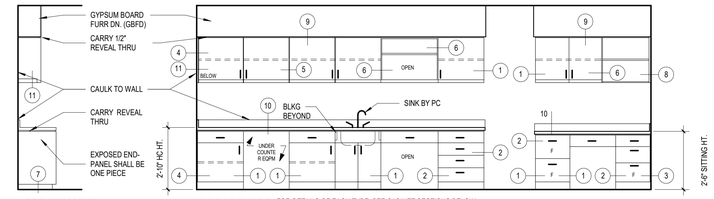

TYPICAL EXPOSED END

TYPICAL ELEVATIONS FOR DETAILS OF EACH TYPE, SEE CABINET SECTIONS BELOW; WHERE COUNTER TOP ABUTS WALL, PROVIDE END SPLASH

TOILET ACCESSORIES SCHEDULE - ALTERNATE #1

ITEM #	DESCRIPTION	MFR.	MODEL #	PROVIDED BY
TA-1	CONTURA SERIES SURFACE MOUNTED SOAP DISPENSER	BOBRICK	B-4112	CFCI
TA-2	SURFACE MOUNTED PAPER TOWEL DISPENSER - 10.75" W X 7.125" H X 4" DEEP	BOBRICK	B-2621	CFCI

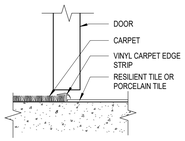

2 CPT TO VCT
3" = 1'-0"

FLOORING TRANSITION DETAIL LEGEND

	CARPET	PORCELAIN TILE	RESILIENT TILE (RTF)	QUARRY TILE	CERAMIC TILE	CONCRETE	TERRAZZO	ATHLETIC FLOOR	RESINOUS	EXTERIOR
CARPET	--		T1	--	--	--	--	--	--	--
PORCELAIN TILE	--	--		--	--	--	--	--	--	--
RESILIENT TILE	--	--	--	--	--	--	--	--	--	--
QUARRY TILE	--	--	--	--	--	--	--	--	--	--
CERAMIC TILE	--	--	--	--	--	--	--	--	--	--
CONCRETE	--	--	--	--	--	--	--	--	--	--
TERRAZZO	--	--	--	--	--	--	--	--	--	--
ATHLETIC FLOOR	--	--	--	--	--	--	--	--	--	--
RESINOUS	--	--	--	--	--	--	--	--	--	--
EXTERIOR	--	--	--	--	--	--	--	--	--	--

NOTE:
AT ALL TRANSITIONS BETWEEN FLOOR MATERIALS, INSTALL SILLS OR THRESHOLDS, AND OR TERMINATION MATERIALS AS INDICATED ON THESE DRAWINGS OR AS OTHERWISE RECOMMENDED BY MANUFACTURER'S WRITTEN INSTRUCTIONS.

NOTE:
ALL INTERIOR SURFACES TO BE FINISHED WITH WHITE CABINET LINER UNO

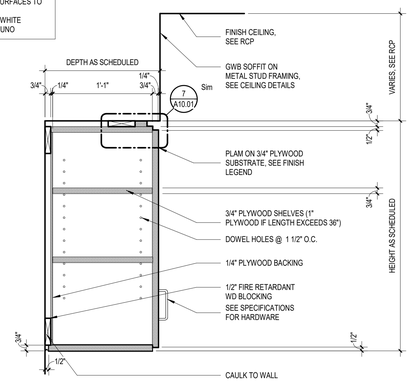

4 UPPER CABINET CLOSED SHELVING
1 1/2" = 1'-0"

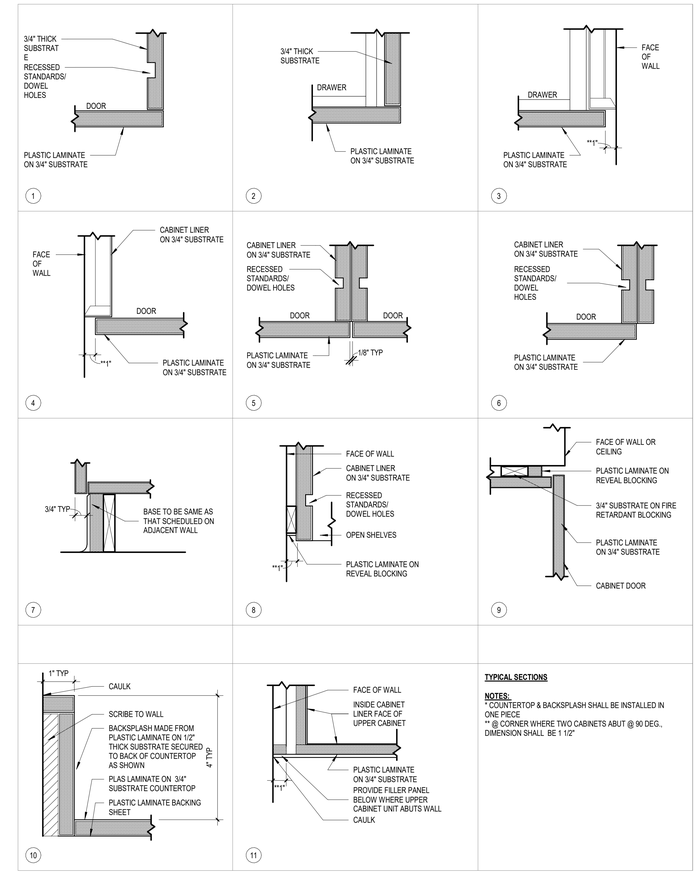

TYPICAL SECTIONS

NOTES:
* COUNTERTOP & BACKSPLASH SHALL BE INSTALLED IN ONE PIECE
** @ CORNER WHERE TWO CABINETS ABUT @ 90 DEG., DIMENSION SHALL BE 1 1/2"

6 MIL-TYPICAL MILLWORK OVERLAY ELEVATIONS & SECTIONS
1 1/2" = 1'-0"

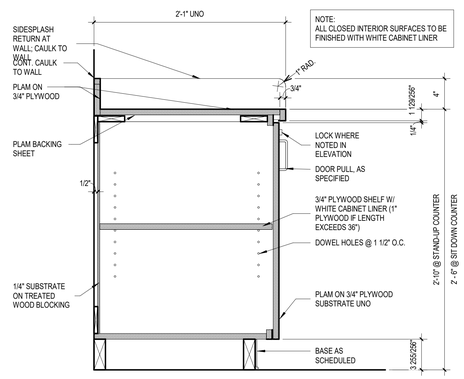

5 BASE CABINET DETAIL - DOORS
1 1/2" = 1'-0"

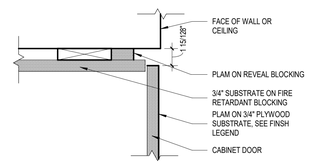

7 CABINET @ SOFFIT DETAIL
3" = 1'-0"

SSOE®
S&W

PROFESSIONAL SEALS:

SOUTH CAROLINA CERTIFICATE OF AUTHORIZATION SSOE, INC No. 746

STATE OF SOUTH CAROLINA WILLIAM J. FLEMING Columbia, SC No. 3452 REGISTERED ARCHITECT
8-6-2021

SUBMITTAL/REVISION SCHEDULE:

NO.	DATE	DESCRIPTION
	8.06.2021	CONSTRUCTION DOCUMENTS

■ APPROVED FOR CONSTRUCTION
□ NOT APPROVED FOR CONSTRUCTION

CLIENT INFORMATION:

SOUTH CAROLINA EDUCATION LOTTERY

South Carolina Education Lottery®

CLIENT PROJECT #:	20048.00
SCEL PROJECT #:	Y20-N001-CB

PROJECT INFORMATION:

4TH FLOOR UPFIT

1333 MAIN STREET, COLUMBIA, SOUTH CAROLINA

SSOE/SW PROJECT #:	021-00531-00
SSOE/SW MANAGER:	BILL FLEMING

SSOE® | STEVENS & WILKINSON
1501 Main Street, Suite 730
Columbia, SC 29201
T. (803) 765-0320

THIS DRAWING IS THE PROPERTY OF SSOE | STEVENS & WILKINSON. UNAUTHORIZED USE OF ANY KIND, INCLUDING USE ON OTHER PROJECTS, IS PROHIBITED.
© SSOE, INC. 2021

MILLWORK SECTIONS & DETAILS

A10.01

A B C D E F G H J

PARTITION TYPE IDENTIFICATION LEGEND & NOTES

PARTITION TAG LEGEND

"CORE CONFIGURATION" NOTED BY LETTER
"FINISH CONFIGURATION" NOTED BY #
"CORE MEMBER SIZE(S)" # FOR NOMINAL SIZE OF STUD, CMU,. ETC AND LETTER FOR FURRING SIZES - SEE CHART BELOW FOR MORE INFO
A# #A ##AA
SPECIAL CONDITION IF DIFFERENT FROM TYPICAL WALL.
- ## FOR ATYPICAL HEAD OF WALL FOR DETAIL # ON SHEET **A0.XX**
- LETTER FOR ALL OTHER ATYPICAL CONDITIONS AS LISTED BELOW

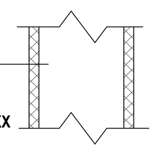

"CORE CONFIGURATION"

F FC
G MS (FINISH ONE SIDE)
M MS (FINISH TWO SIDES)
MX MS (FINISH TWO SIDES) - EXISTING

"FINISH CONFIGURATION"

1 I I + GWB (1) or GWB (1) + I I + GWB (1)
2 I I + GWB (2) or GWB (2) + I I + GWB (2)
3 I I + GWB (3) or GWB (3) + I I + GWB (3)
4 GWB (1) + I I + GWB (2)
5 GWB (1) + I I + GWB (3)
6 GWB (2) + I I + GWB (3)
7 GWB (2) + I I + GWB (1)
8 GWB (3) + I I + GWB (1)
9 GWB (3) + I I + GWB (2)

ABBREVIATIONS

I I = "CORE"
(#) = NUMBER OF LAYERS OF GWB
CIP = CAST-IN-PLACE CONCRETE
CMU = CONCRETE MASONRY UNIT
FC = STUD FURRING (TYPE AS SCHEDULED)
GSL = GYPSUM SHAFT LINER
GWB = GYPSUM WALLBOARD, TYPE AS SCHEDULED
HF = HAT-SHAPED METAL FURRING
MS = METAL STUD FRAMING
MF = METAL STUD FURRING
MSS = METAL SHAFTWALL STUD FRAMING
RC = RESILIENT CHANNEL
WS = WOOD STUD FRAMING
WF = WOOD FURRING
ZF = METAL Z-FURRING

PARTITION - "CORE MEMBER SIZE"

METAL STUDS	
NOMINAL	ACTUAL
1	1 5/8"
2	2 1/2"
3	3 5/8"
4	4"
6	6"
8	8"

METAL STUD FURRING (MSF)		
CALLOUT	TYPE	SIZE (DEPTH ONLY)
A	HF	7/8"
B	HF	1 1/2"
C	RC	1/2"
D	ZF	1"
E	ZF	1 1/2"
F	ZF	2"
G	ZF	2 1/2"
H	MSF	3/4"
J	MSF	1"
K	MSF	1 1/2"
L	MSF	2"

1. CAST-IN-PLACE CONCRETE "STRUCTURAL MEMBER SIZE IS DIMENSIONED AT PLANS, SEE STRUCTURAL DWGS FOR MORE INFORMATION.
2. RESILIENT CHANNEL IS 1/2" DEEP, SEE SPECIFICATIONS FOR LENGTH AND TYPE
3. FOR ALL METAL STUD FURRING, ONLY DEPTH IS NOTED. SEE SPECIFICATION FOR ALL OTHER SIZE AND GAUGE REQUIREMENTS. FURRING LEGS SHALL BE OF DIMENSION ADEQUATE TO MEET PERFORMANCE AND FASTENING REQUIREMENTS.

PARTITION - "RATING" - CALLED OUT ON LIFE SAFETY PLANS

SP SMOKE PARTITION
SB SMOKE BARRIER
5P 30 MINUTE FIRE PARTITION
1B 1 HOUR FIRE BARRIER
1P 1 HOUR FIRE PARTITION
1W 1 HOUR FIRE WALL
2B 2 HOUR FIRE BARRIER
2P 2 HOUR FIRE PARTITION
2W 2 HOUR FIRE WALL
3B 3 HOUR FIRE BARRIER
3P 3 HOUR FIRE PARTITION
3W 3 HOUR FIRE WALL

PARTITION - "HEAD CONDITION"

1. ALL RATED WALLS ARE TO UNDERSIDE OF DECK.
2. ALL ACOUSTICAL WALLS ARE TO UNDERSIDE OF DECK.
3. SEE PARTITION TYPE DETAILS FOR TYPICAL HEAD OF WALL CONDITION. IF HEAD OF WALL CONDITION IS ATYPICAL, NUMBER NOTED IN PARTITION TYPE TAG IN SPECIAL CONDITIONS AREA OF TAG CORRESPONDS TO DETAIL # ON HEAD OF WALL CONDITION DETAILS ON SHEET **A0.50**

PARTITION - "SPECIAL CONDITION"

FOR ALL OTHER ATYPICAL CONDITIONS, LETTER CORRESPONDS TO LIST BELOW:

A. NOT USED
B. NOT USED
C. STUD AND GWB TO 6" ABOVE HIGHEST ADJACENT CEILING.
D. NOT USED
E. EXTEND EXISTING WALL STUD & BOTH SIDES OF GWB TO UNDERSIDE OF DECK. SEAL ALONG BOTH SIDES OF TOP OF GWB TO PREVENT FUMES AND ODORS IN THE PRINT ROOM FROM INFILTRATING ADJACENT ROOMS AND CORRIDORS. SEE WALL PARTITION ON 5/A0.50 FOR DETAILS.
F. STUD AND GWB TO EXTEND TO UNDERSIDE OF CEILING. TOP OF WALL TO BE CAPPED WITH GWB. SEE HEAD DETAIL #4 ON A0.50. LIGHT GAUGE MFR.'S ENGINEER OF RECORD TO DESIGN WALL TO MEET PERFORMANCE CRITERIA AS DETAILED AT GENERAL NOTES ON A0.10. IF REQUIRED, PROVIDE STRUCTURAL STEEL TUBE POST TO PROVIDE ADDITIONAL SUPPORT FOR WALL.
G. STUD AND GWB TO EXTEND TO UNDERSIDE OF DECK. SEE HEAD DETAIL #5 ON A0.50.

GENERAL NOTES: STUD CONSTRUCTION

1. BASIS OF DESIGN: *STEEL FRAMED PARTITIONS*
DESIGN IS BASED ON GUIDELINES INCLUDED IN PRODUCT TECHNICAL INFORMATION OF THE STEEL MANUFACTURE'S ASSOCIATION LATEST EDITION OF THE SSMA PUBLICATION AND THE FOLLOWING PERFORMANCE CRITERIA:

A. LIMITING HEIGHT CRITERIA:
DEFLECTION OF **L/240** AT **5 LBS. PER SQ. FT.** CONSTANT AIR-PRESSURE LOADS

B. THICKNESS-STEEL COMPONENTS:

GAUGE	DESIGN THICKNESS
22	0.0283
20	0.0346
18	0.0451

2. MINIMUM GAUGE:
IF LIMITING HEIGHT AS SCHEDULED IN PARTITION DETAILS EXCEEDS PROJECT CONDITIONS OR IF THE SELECTED STEEL STUD MANUFACTURE'S THICKNESS OF STEEL COMPONENTS VARIES FROM THE BASIS OF DESIGN AS SET FORTH ABOVE, PROVIDE MANUFACTURE'S STANDARD THICKNESS (GAUGE) THAT MEETS OR EXCEEDS LIMITING HEIGHT PERFORMANCE CRITERIA FOR STUD DEPTH AND SPACING INDICATED.

3. DOOR JAMBS
PROVIDE DOUBLE 20 GA. STUDS AT ALL DOOR OPENINGS, EXTEND FROM FLOOR TO STRUCTURE ABOVE. TYPICAL FOR ALL DOORS IN METAL STUD WALLS.

GENERAL NOTES: FIRE RATED ASSEMBLIES

1. ALL FIRE-RATED ASSEMBLIES TO EXTEND FROM TOP OF SLAB TO UNDERSIDE OF STRUCTURE. SEAL TOP OF ASSEMBLY TO THE UNDERSIDE OF METAL DECK OR STEEL BEAM AS REQUIRED TO ACHIEVE FIRE PROTECTION RATING.
2. AT GWB/STUD FIRE RATED ASSEMBLIES, INSTALL FRAMING AND GYPSUM WALL BOARD TO OFFSET AROUND STRUCTURAL MEMBERS OR OTHER OBSTRUCTIONS TO MAINTAIN ACOUSTICAL OR FIRE RATINGS (IF ACOUSTICAL PARTITION IS ALSO FIRE-RATED). SEE DETAILS AT SHEET **A0.50**.
3. SEAL BOTTOM OF WALL TO CONCRETE SLAB TO ACHIEVE FIRE PROTECTION RATING. SEE DETAILS AT SHEET **A0.50**.
4. REFER TO SPECIFICATIONS FOR FIRE-RATED JOINT SYSTEMS FOR FIRE-RATED SEALANTS AND FIRESTOP CAULKING.
5. INSTALL FRAMING AND GWB TO OFFSET AROUND STRUCTURAL MEMBERS OR OTHER PENETRATIONS OF FIRE-RATED ASSEMBLIES TO MAINTAIN FIRE RESISTIVE RATINGS PER UL APPROVED DETAIL.

ASSEMBLY PRIORITY LEGEND

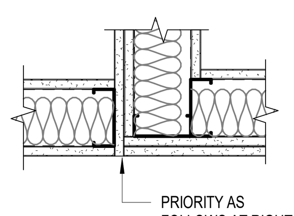

PROVIDE RATED ASSEMBLIES IN ACCORDANCE WITH UL LISTING, MFR. INSTRUCTIONS & APPROVED DETAILS INDICATING HOURS OF FIRE RESISTANCE. REFER TO LIFE SAFETY PLANS, PLANS & ENLARGED PLANS FOR PARTITION TYPES, LOCATIONS & EXTENT OF RATED WALLS.

PRIORITY OF RATED ASSEMBLIES:
- TWO HOUR FIRE & SMOKE WALL — PRIORITY 1 - HIGHEST
- TWO HOUR FIRE WALL — PRIORITY 2
- TWO HOUR SHAFT WALL — PRIORITY 3
- ONE HOUR FIRE & SMOKE WALL — PRIORITY 4
- ONE HOUR FIRE WALL — PRIORITY 5
- ONE HOUR SHAFT WALL — PRIORITY 6
- NON-RATED — PRIORITY 7 - LOWEST

GENERAL NOTES - FIRE RATED STENCIL

1. APPLY PARTITION LABELS ABOVE THE CEILING ON ALL RATED AND SMOKE TIGHT ASSEMBLIES. LABEL AS PER ASSEMBLY RATING.
2. COLOR TO BE BRIGHT RED. MINIMUM TEXT SIZE AS REQUIRED BY LOCAL AUTHORITIES HAVING JURISDICTION.
3. APPLY LABEL AT BEGINNING AND END OF EACH LENGTH OF ASSEMBLY AND APPLY LABEL INTERMITTENTLY BETWEEN END/BEGINNING AT MINIMUM SPACING OF 12'-0" O.C.
4. ARROWS TO BE CONTINUOUS AROUND ASSEMBLY.
5. FIRE/SMOKE DAMPER ACCESS AND OTHER MECHANICAL ELEMENTS SHALL BE IDENTIFIED AS PER ***IBC 2018 SECTION 717.4***. ALL OTHER IDENTIFIERS SHALL BE IN COMPLIANCE WITH THE IBC AND ALL OTHER APPLICABLE CODES AND MUNICIPALITY REQUIREMENTS.
6. REPAIR/PATCH EXISTING FIRE RATED PARTITION LABELS AS NECESSARY
7. PAINT OVER EXISTING FIRE RATED PARTITION LABELS AND ARROWS SO AS TO COMPLETELY COVER ALL INDICATION OF A FIRE RATING FOR ASSEMBLIES THAT WILL NOT RETAIN A FIRE RATING IN THE PROPOSED NEW DESIGN.

FIRE RATED STENCIL DETAIL

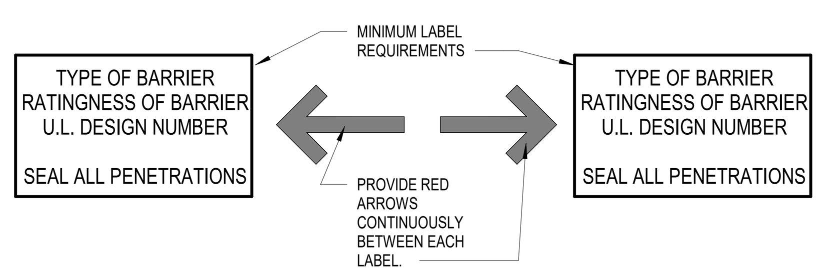

GENERAL NOTES: GYPSUM WALLBOARD

1. DO NOT INSTALL GYPSUM WALLBOARD IN DIRECT CONTACT WITH THE FLOOR. ALL GWB SHALL BE SHIMMED 1/2" ABOVE FLOOR SLAB WITH NON-POROUS SHIM. PLASTIC NON-POROUS HORSESHOE SHIMS ARE RECOMMENDED; GYPSUM WALLBOARD SHIMS ARE NOT ACCEPTABLE. PROVIDE BACKER ROD & CONTINUOUS ACOUSTICAL OR FIRE RATED SEALANT TOOLED FOR HOURGLASS SHAPE PER MFR'S RECOMMENDATIONS.
2. WHERE GYPSUM WALL BOARD EXTENDS TO THE UNDERSIDE OF STRUCTURE, STOP GYPSUM WALL BOARD 1/2" BELOW LINE OF STRUCTURE AND SEAL AS REQUIRED.
3. TYPICAL AT ALL INTERIOR PARTITIONS, GYPSUM WALLBOARD TO BE 5/8" TYPE "X" UNLESS NOTED OTHERWISE AT PARTITION TYPE MODIFIER OR AS SCHEDULED IN SPECIFICATION.
4. TYPICAL AT ALL EXTERIOR PERIMETER WALLS, INSTALL 5/8" TYPE "X" MOLD AND MOISTURE RESISTANT GYPSUM WALLBOARD.
5. STAGGER JOINTS AT INSTALLATIONS OF MULTIPLE LAYERS OF GYPSUM WALLBOARD.

GENERAL NOTES: GYPSUM WALLBOARD REVEALS

1. STANDARD, WHERE INDICATED IN THESE DOCUMENTS, PROVIDE REVEALS OF TYPE AND SIZE INDICATED AS SPECIFIED.
2. ELEVATIONS MAY NOT SHOW ALL FACES OF COLUMNS OR FACES OF EVERY WALL - G.C. SHALL ASSUME THAT ALL REVEALS WILL RETURN TO INSIDE CORNER UNLESS OTHERWISE NOTED.
3. AT ALL INTERSECTIONS OF VERTICAL AND HORIZONTAL REVEALS, PROVIDE FACTORY FABRICATED INTERSECTIONS AND CORNERS.

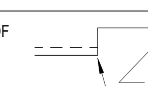

GENERAL NOTES: NON-RATED & ACOUSTICAL PARTITIONS/ASSEMBLIES

1. ALL INTERIOR PARTITIONS TO EXTEND 6" ABOVE CEILING HEIGHT UNLESS NOTED OTHERWISE BY PARTITION TYPE HEAD CONDITION SCHEDULE. SEE PLAN FOR PARTITION IDENTIFICATION.
2. ALL ACOUSTIC PARTITIONS TO EXTEND FROM TOP OF SLAB TO UNDERSIDE OF STRUCTURE. SEAL TOP AND BOTTOM TYPICAL TO THE UNDERSIDE OF METAL DECK OR STEEL BEAM AS REQUIRED TO ACHIEVE ACOUSTIC OR FIRE PROTECTION RATING. SEE DETAILS AT SHEET **A0.50**. INSTALL FRAMING AND GYPSUM WALL BOARD TO OFFSET AROUND STRUCTURAL MEMBERS OR OTHER OBSTRUCTIONS TO MAINTAIN ACOUSTICAL OR FIRE RATINGS (IF ACOUSTICAL PARTITION IS ALSO FIRE-RATED).
3. ALL INTERIOR METAL STUD PARTITIONS TO HAVE SOUND BATTS INSULATION UNLESS NOTED OTHERWISE BY PARTITION MODIFIER. AT 3 5/8" STUD CAVITIES, PROVIDE 3 1/2" SOUND BATTS. AT 6" OR 8" STUD CAVITIES PROVIDE 5 1/2" SOUND BATTS.
4. ALL PARTITIONS CONTAINING PLUMBING PIPING SHALL BE THERMALLY INSULATED WITH MINERAL WOOL.
5. THE FOLLOWING LIST OF ROOMS (IF USED) SHALL HAVE THEIR PERIMETER PARTITIONS INSULATED USING MINERAL WOOL: ELECTRICAL ROOMS, MECHANICAL ROOMS, AV EQUIPMENT ROOMS, DATA OR TELECOM ROOMS, SPRINKLER RISER ROOMS AND FIRE PUMP ROOMS.
6. WHERE NOTED, PROVIDE RESILIENT CHANNELS AT CORRIDOR SIDE OF WALL. SEE PARTITION TYPE DETAILS AND SPECIFICATIONS FOR INSTALLATION GUIDELINES.

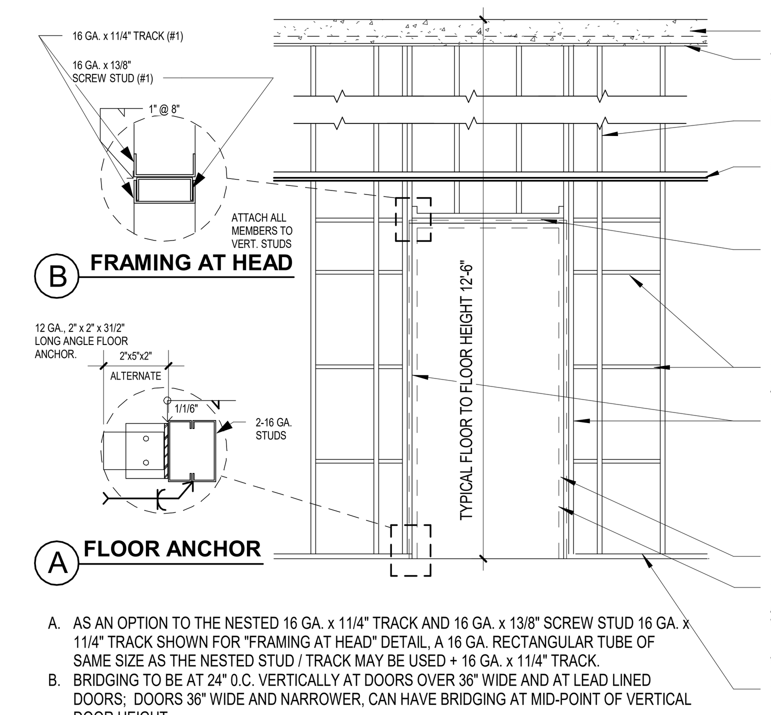

A. AS AN OPTION TO THE NESTED 16 GA. x 11/4" TRACK AND 16 GA. x 13/8" SCREW STUD 16 GA. x 11/4" TRACK SHOWN FOR "FRAMING AT HEAD" DETAIL, A 16 GA. RECTANGULAR TUBE OF SAME SIZE AS THE NESTED STUD / TRACK MAY BE USED + 16 GA. x 11/4" TRACK.
B. BRIDGING TO BE AT 24" 0.C. VERTICALLY AT DOORS OVER 36" WIDE AND AT LEAD LINED DOORS; DOORS 36" WIDE AND NARROWER, CAN HAVE BRIDGING AT MID-POINT OF VERTICAL DOOR HEIGHT.

3 GENERAL - DOOR FRAMING REINFORCING
1" = 1'-0"

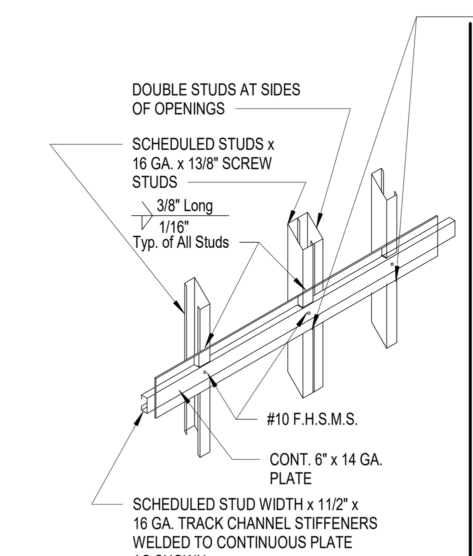

CONNECTION DETAIL

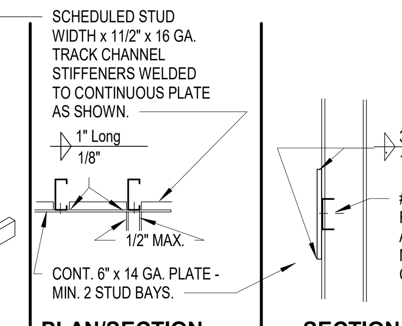

TYPE "C" BACKING PLATE

NOTES:
1. TYPE "C" BACKING PLATE FOR ALL UPPER WALL HUNG CABINETS (OVER 2 SHELVES), WALL MOUNTED EQUIPMENT UPTO 200 POUNDS PER FOOT INCLUDING SHOWER SEAT AND GRAB BARS.
2. USE #12 SELF-TAPPING SHEET METAL SCREWS WHEN ATTACHING ITEMS TO BACKING PLATE.
3. WALL STUD FLANGES ARE CONTINUOUS.

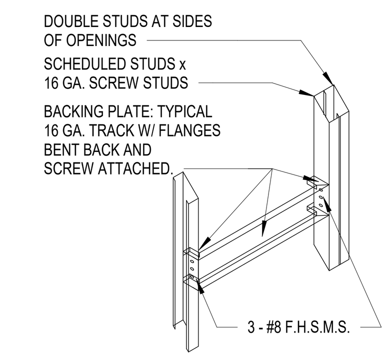

CONNECTION DETAIL

TYPE "B" BACKING PLATE

NOTES:
1. TYPE "B" BACKING PLATE FOR UPPER WALL HUNG CABINETS (UP TO 2 SHELVES), BASE CABINETS, FULL HEIGHT CABINETS, FILM VIEWING COUNTERS, WALL HUNG BENCHES, HANDRAILS, GUARDRAILS, AND WALL HUNG EQUIPMENT - MAXIMUM WEIGHT 100 POUNDS
2. VERIFY LENGTH, HEIGHT, LOCATION OF BACKING PLATE AND NUMBER REQUIRED WITH MANUFACTURER OF ITEMS IN NOTE 1.
3. USE #12 SELF-TAPPING SHEET METAL SCREWS WHEN ATTACHING ITEMS TO BACKING PLATE.
4. WALL STUD FLANGES ARE CONTINUOUS.

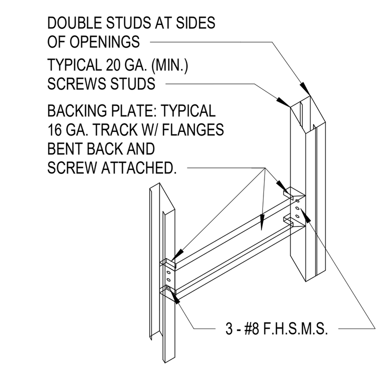

CONNECTION DETAIL

TYPE "A" BACKING PLATE

NOTES:
1. TYPE "A" BACKING PLATE FOR MISC. ITEMS; I.E. SURFACE MOUNTED MIRRORS, WASTE RECEPTACLES, TOWEL DISPENSERS, CHAIR RAILS, ETC. MAXIMUM WEIGHT 50 POUNDS
2. VERIFY LENGTH, HEIGHT, LOCATION OF BACKING PLATE AND NUMBER REQUIRED WITH ACCESSORY MANUFACTURER.
3. USE #12 SELF-TAPPING SHEET METAL SCREWS WHEN ATTACHING ITEMS TO BACKING PLATE.
4. WALL STUD FLANGES ARE CONTINUOUS.

6 BACKING PLATE AND CONNECTION DETAILS
1" = 1'-0"

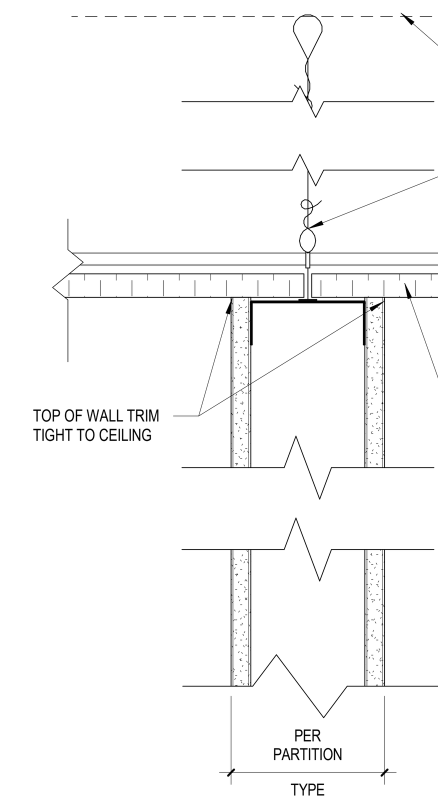

4 PARTIAL HEIGHT WALL
3" = 1'-0"

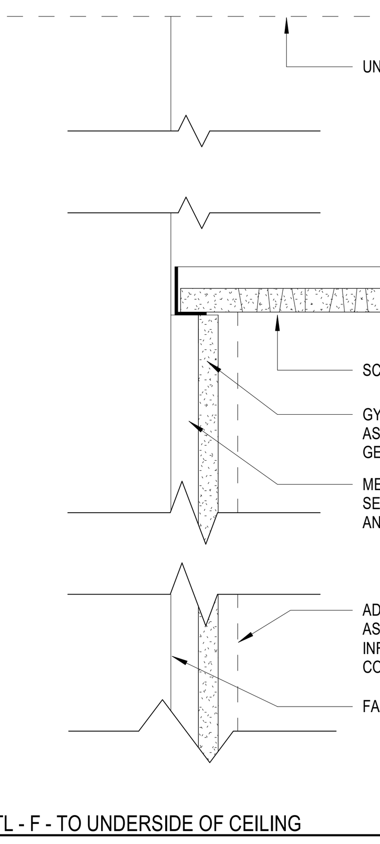

1 PARTIAL HEAD DTL - F - TO UNDERSIDE OF CEILING
3" = 1'-0"

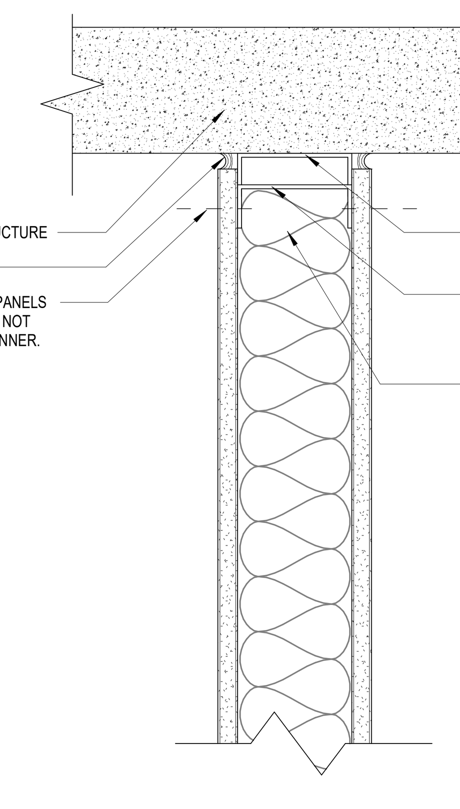

5 TOP OF WALL TO UNDERSIDE OF DECK
3" = 1'-0"

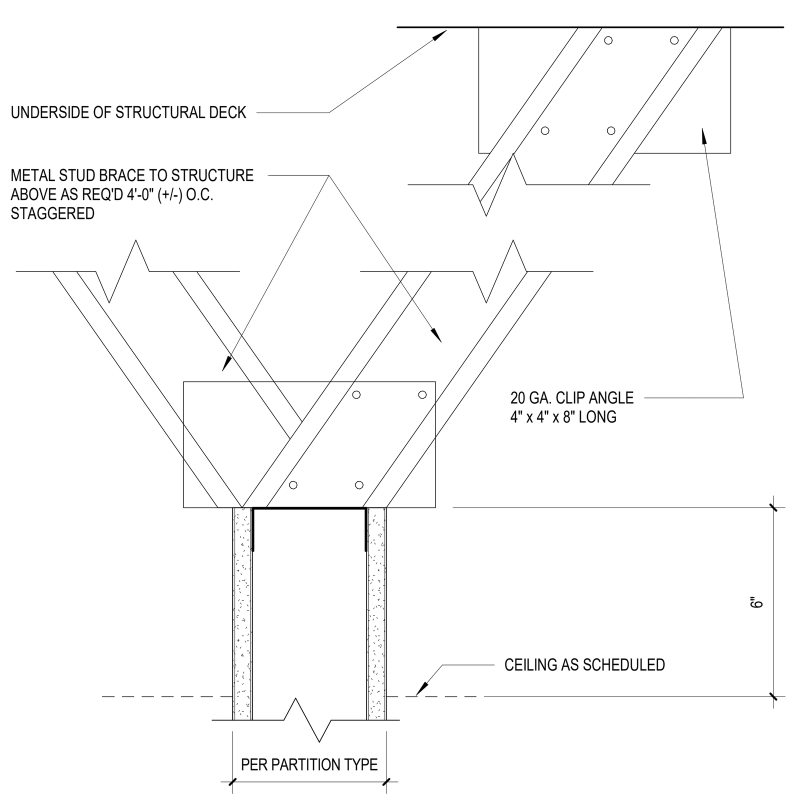

2 PARTIAL HEAD DTL - M1 - STUD/GWB TO 6" ABOVE CEILING
3" = 1'-0"

M1

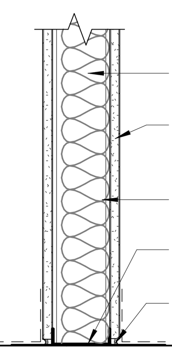

SECTION AT BASE

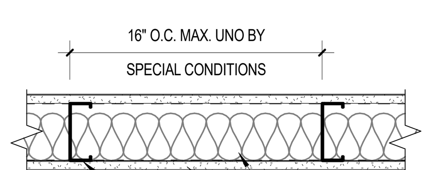

PLAN DETAIL

G1

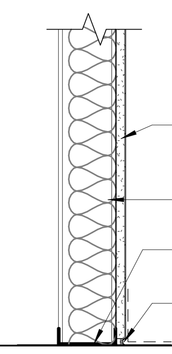

SECTION AT BASE

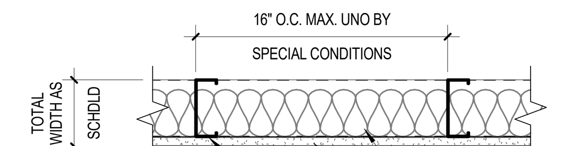

PLAN DETAIL

F1

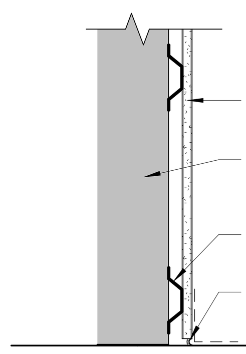

SECTION AT BASE

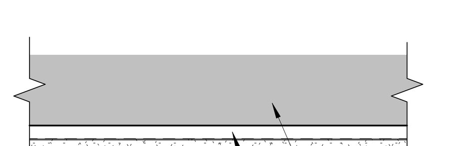

PLAN DETAIL

ssoe
S&W

PROFESSIONAL SEALS:

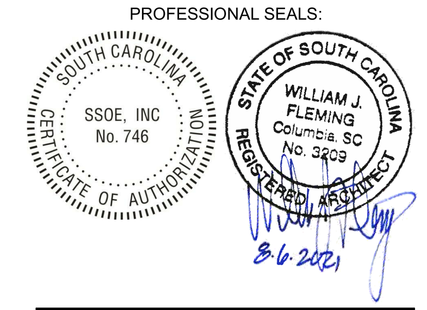

SUBMITTAL/REVISION SCHEDULE:

NO.	DATE	DESCRIPTION
	8.06.2021	CONSTRUCTION DOCUMENTS

■ APPROVED FOR CONSTRUCTION
□ NOT APPROVED FOR CONSTRUCTION

CLIENT INFORMATION:

SOUTH CAROLINA EDUCATION LOTTERY

South Carolina Education Lottery ®

CLIENT PROJECT #: 20048.00
SCEL PROJECT #: Y20-N001-CB

PROJECT INFORMATION:

4TH FLOOR UPFIT

1333 MAIN STREET, COLUMBIA, SOUTH CAROLINA

SSOE/SW PROJECT #: 021-00531-00
SSOE/SW MANAGER: BILL FLEMING

ssoe | STEVENS & WILKINSON
1501 Main Street, Suite 730
Columbia, SC 29201
T. (803) 765-0320

THIS DRAWING IS THE PROPERTY OF SSOE | STEVENS & WILKINSON. UNAUTHORIZED USE OF ANY KIND, INCLUDING USE ON OTHER PROJECTS, IS PROHIBITED.
© SSOE, INC. 2021

PARTITION TYPES & DETAILS

A0.50

1 2 3 4 5 6 7

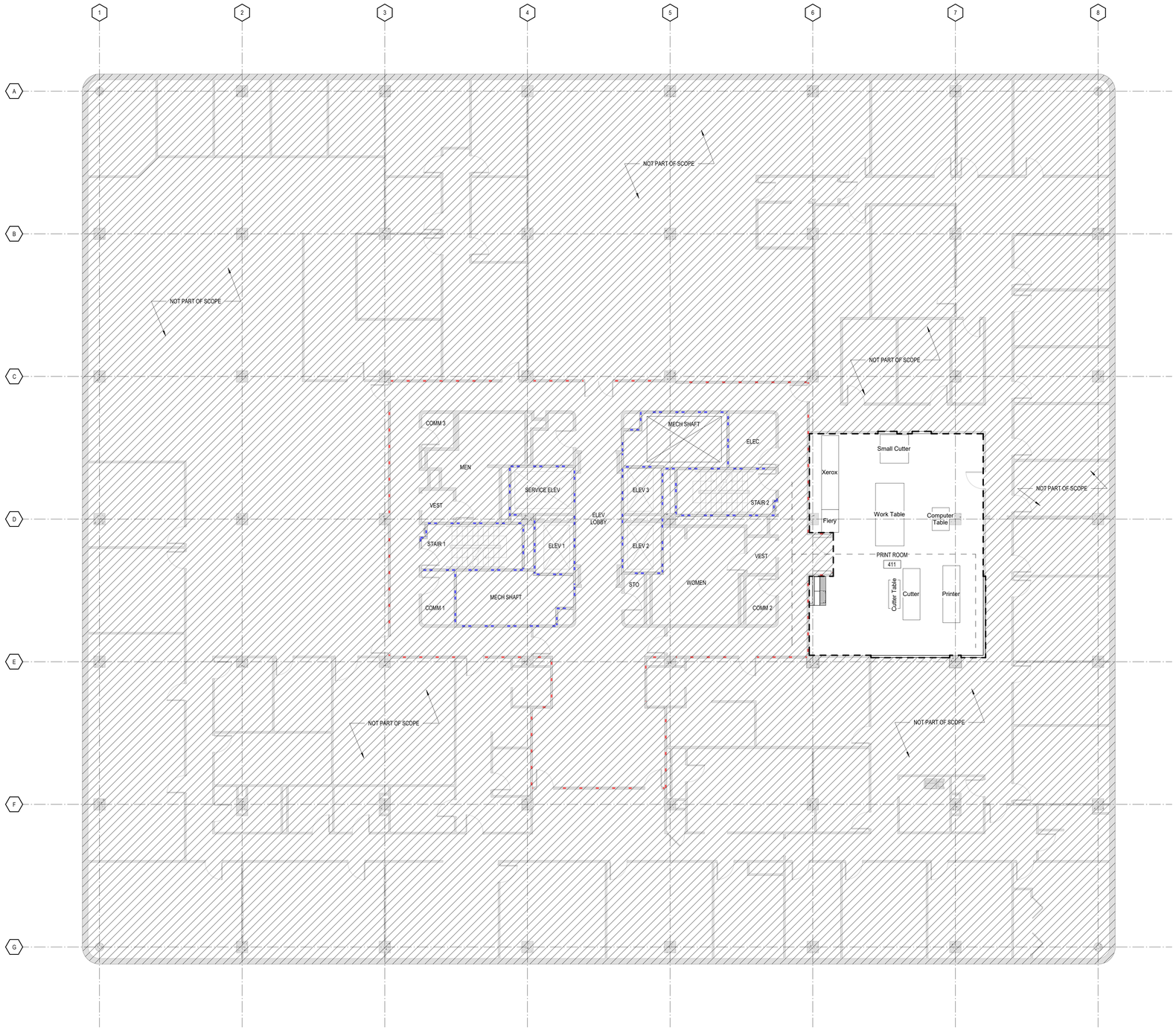

1 4TH FLOOR OVERALL PLAN
1/8" = 1'-0"

GENERAL FLOOR PLAN NOTES

1. ACCESS DOORS SHALL BE INSTALLED IN WALLS AT ALL EQUIPMENT, VALVE OR OTHER LOCATIONS REQUIRING ACCESS FOR MAINTENANCE WHICH ARE LOCATED BEHIND FINISHED SURFACES. SEE SPECIFICATIONS FOR SPECIFIC REQUIREMENTS AND DIRECTIONS.
2. INSTALL GYPSUM WALLBOARD CONTROL JOINTS IN ACCORDANCE WITH ASTM C-840. (WHERE A PARTITION'S LENGTH RUNS IN AN UNINTERRUPTED STRAIGHT PLAN EXCEEDING 30 LINEAR FEET, CONTROL JOINTS SHALL BE INSTALLED 30'-0" ON CENTER MAXIMUM. INSTALL CONTROL JOINTS ALIGNED WITH DOOR JAMBS AND OR EDGE OF SOFFITS WHERE-EVER POSSIBLE. ALL GWB CONTROL JOINT LOCATIONS FOR WALLS AND SOFFITS SHALL MARKED UP ON SHOP DRAWINGS AND SUBMITTED TO THE ARCHITECT FOR APPROVAL PRIOR TO INSTALLATION.
3. WHERE ADJACENT WALLS HAVE DISSIMILAR # OF LAYERS OF GWB, INSTALL FINAL LAYERS OF GWB FLUSH.

DRAWING CONVENTIONS LEGEND

- EXISTING CONSTRUCTION
- NEW NON RATED METAL STUDS CONSTRUCTION
- EXISTING 1 HOUR RATED METAL STUDS CONSTRUCTION
- EXISTING 2 HOUR RATED METAL STUDS CONSTRUCTION
- CENTERLINE
- BUILDING ELEMENTS ABOVE
- 23.4 — EXISTING COLUMN GRID REFERENCE
- ALIGN — ALIGNMENT REFERENCE

REFERENCE CONVENTIONS

LEVEL 1 / 0'-0" — NAME OF ELEVATION/LEVEL; PROJECT ELEVATION

ELEVATION (FLOOR/LEVEL) REFERENCE

Name / 150 SF / 101 / 500 / ZONE — NAME (AT OCCUPANT COUNT PLANS AND LIFE SAFETY PLANS, THIS IS THE OCCUPANT LOAD FACTOR TYPE); SQUARE FOOTAGE; NUMBER (IF USED); OCCUPANT LOAD COUNT (IF USED); ZONE (IF USED)

AREA REFERENCE

Room name / 101 / 150 SF — ROOM NAME; ROOM NUMBER; AREA (IF USED)

ROOM REFERENCE

A## — CORE AND FINISH CONFIGURATION; CORE AND FINISH SIZE; SPECIAL CONDITIONS (IF USED)

4W — PARTITION RATING *NOTED ON LIFE SAFETY PLANS

*SEE PARTITION SHEET FOR MORE INFO

PARTITION TYPE IDENTIFICATION

GWB@20'-4" — CEILING ELEVATION; CEILING MATERIAL

20'-4 1/2" — CEILING ELEVATION

CEILING TYPE IDENTIFICATION

DOOR # - SEE DOOR SCHEDULE

60 — DOOR & FRAME RATING IN MINUTES

DOOR IDENTIFICATION

F01 — FURNITURE/EQUIPMENT ITEM NO. SEE SCHEDULE FOR MORE INFO

FURNITURE/EQUIPMENT IDENTIFICATION

B222 / 27X24X28 — ELEVATION MARKER, SEE ELEVATIONS ON SHEET A10.01; SIZE (WIDTH x DEPTH x HEIGHT)

CASEWORK IDENTIFICATION

TRUE NORTH / PROJECT NORTH

PROFESSIONAL SEALS:

SOUTH CAROLINA — SSOE, INC No. 746 — CERTIFICATE OF AUTHORIZATION

STATE OF SOUTH CAROLINA — WILLIAM J. FLEMING, Columbia SC, No. 3452 — REGISTERED ARCHITECT — 8-6-2021

SUBMITTAL/REVISION SCHEDULE:

NO.	DATE	DESCRIPTION
	8.06.2021	CONSTRUCTION DOCUMENTS

■ APPROVED FOR CONSTRUCTION
□ NOT APPROVED FOR CONSTRUCTION

CLIENT INFORMATION:

SOUTH CAROLINA EDUCATION LOTTERY

CLIENT PROJECT #:	20048.00
SCEL PROJECT #:	Y20-N001-CB

PROJECT INFORMATION:

4TH FLOOR UPFIT

1333 MAIN STREET, COLUMBIA, SOUTH CAROLINA

SSOE/SW PROJECT #:	021-00531-00
SSOE/SW MANAGER:	BILL FLEMING

SSOE | STEVENS & WILKINSON
1501 Main Street, Suite 730
Columbia, SC 29201
T. (803) 765-0320

THIS DRAWING IS THE PROPERTY OF SSOE | STEVENS & WILKINSON. UNAUTHORIZED USE OF ANY KIND, INCLUDING USE ON OTHER PROJECTS, IS PROHIBITED.
© SSOE, INC. 2021

4TH FLOOR OVERALL PLAN

A1.40

C:\Autodesk\Revit\2004800 - Arch - SC Education Lottery Upfit - Adjusted Scope - V19.2_lbajarias@ssoe.com.rvt :**FILE PATH**
10/20/2021 3:08:29 PM :**PRINT DATE**

1 LEVEL 4 FLOOR PLAN
1/4" = 1'-0"

DRAWING REFERENCE SYMBOLS

DRAWING # ON SHEET
DRAWING TITLE
1 DRAWING NAME
1/8" = 1'-0"
DRAWING SCALE

DRAWING IDENTIFICATION ON SHEET

DRAWING # ON SHEET
SHEET # ON WHICH DRAWING CAN BE FOUND

EXTERIOR ELEVATION REFERENCE

DRAWING # ON SHEET
SHEET # ON WHICH DRAWING CAN BE FOUND

INTERIOR ELEVATION REFERENCE

DRAWING # ON SHEET
SHEET # ON WHICH DRAWING CAN BE FOUND

BUILDING SECTION REFERENCE

DRAWING # ON SHEET
SHEET # ON WHICH DRAWING CAN BE FOUND

WALL SECTION REFERENCE

DRAWING # ON SHEET
SHEET # ON WHICH DRAWING CAN BE FOUND

DETAIL SECTION REFERENCES

AREA DETAILED
DRAWING # ON SHEET
SHEET # ON WHICH DRAWING CAN BE FOUND

REFERENCE CONVENTIONS

LEVEL 1
0'-0"
NAME OF ELEVATION/LEVEL
PROJECT ELEVATION

ELEVATION (FLOOR/LEVEL) REFERENCE

Name
150 SF
101
555
ZONE
NAME (AT OCCUPANT COUNT PLANS AND LIFE SAFETY PLANS, THIS IS THE OCCUPANT LOAD FACTOR TYPE)
SQUARE FOOTAGE
NUMBER (IF USED)
OCCUPANT LOAD COUNT (IF USED)
ZONE (IF USED)

AREA REFERENCE

Room name
101
150 SF
ROOM NAME
ROOM NUMBER
AREA (IF USED)

ROOM REFERENCE

A##
CORE AND FINISH CONFIGURATION
CORE AND FINISH SIZE
SPECIAL CONDITIONS (IF USED)

4W
PARTITION RATING
*NOTED ON LIFE SAFETY PLANS

SEE PARTITION SHEET FOR MORE INFO

PARTITION TYPE IDENTIFICATION

GWB820'-4"
CEILING ELEVATION
CEILING MATERIAL
20'-4 1/2"
CEILING ELEVATION

CEILING TYPE IDENTIFICATION

DOOR # - SEE DOOR SCHEDULE
DOOR & FRAME RATING IN MINUTES

DOOR IDENTIFICATION

F01
FURNITURE/EQUIPMENT ITEM NO. SEE SCHEDULE FOR MORE INFO

FURNITURE/EQUIPMENT IDENTIFICATION

B222
27x24x36
ELEVATION MARKER, SEE ELEVATIONS ON SHEET A10.01
SIZE (WIDTH x DEPTH x HEIGHT)

CASEWORK IDENTIFICATION

GENERAL FLOOR PLAN NOTES

1. ACCESS DOORS SHALL BE INSTALLED IN WALLS AT ALL EQUIPMENT, VALVE OR OTHER LOCATIONS REQUIRING ACCESS FOR MAINTENANCE WHICH ARE LOCATED BEHIND FINISHED SURFACES. SEE SPECIFICATIONS FOR SPECIFIC REQUIREMENTS AND DIRECTIONS.
2. INSTALL GYPSUM WALLBOARD CONTROL JOINTS IN ACCORDANCE WITH ASTM C-840. (WHERE A PARTITION'S LENGTH RUNS IN AN UNINTERRUPTED STRAIGHT PLAN EXCEEDING 30 LINEAR FEET, CONTROL JOINTS SHALL BE INSTALLED 30'-0" ON CENTER MAXIMUM. INSTALL CONTROL JOINTS ALIGNED WITH DOOR JAMBS AND OR EDGE OF SOFFITS WHERE-EVER POSSIBLE. ALL GWB CONTROL JOINT LOCATIONS FOR WALLS AND SOFFITS SHALL MARKED UP ON SHOP DRAWINGS AND SUBMITTED TO THE ARCHITECT FOR APPROVAL PRIOR TO INSTALLATION.
3. WHERE ADJACENT WALLS HAVE DISSIMILAR # OF LAYERS OF GWB, INSTALL FINAL LAYERS OF GWB FLUSH.

GENERAL NOTES - ACCESSIBILITY

1. ALL PLUMBING UNDER LAVATORIES SHALL BE INSULATED SUCH THAT NO HOT, SHARP OR ABRASIVE SURFACES CAN CAUSE INJURY. SEE PLUMBING DWGS FOR MORE INFO.
2. LEVER OR PUSH OPERATED DEVICES ARE REQUIRED ON ALL FAUCETS; SELF CLOSING DEVICES ARE PERMITTED PROVIDED THE FAUCET REMAINS OPERATING FOR AT LEAST TEN (10) SECONDS. SEE PLUMBING DWGS FOR MORE INFO.

DRAWING CONVENTIONS LEGEND

EXISTING CONSTRUCTION
NEW NON RATED METAL STUDS CONSTRUCTION
EXISTING 1 HOUR RATED METAL STUDS CONSTRUCTION
EXISTING 2 HOUR RATED METAL STUDS CONSTRUCTION
CENTERLINE
BUILDING ELEMENTS ABOVE
23.4 EXISTING COLUMN GRID REFERENCE
ALIGN ALIGNMENT REFERENCE

GENERAL NOTES: DIMENSION CRITERIA

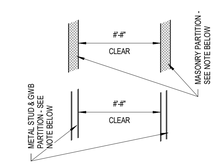

7. CLEAR DIMENSIONS ARE REQUIRED MINIMUM CLEAR WIDTHS BETWEEN FINISH FACES.

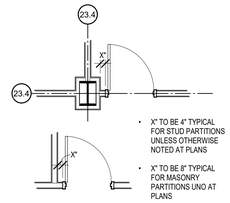

- X" TO BE 4" TYPICAL FOR STUD PARTITIONS UNLESS OTHERWISE NOTED AT PLANS
- X" TO BE 8" TYPICAL FOR MASONRY PARTITIONS UNO AT PLANS

8. FOR OPENINGS IN PARTITIONS OR WALLS:
   A. FOR OPENINGS CENTERED ON A COLUMN CENTERLINE NO DIMENSION WILL BE SHOWN ON THE PLAN, THE WIDTH IS ESTABLISHED BY CRITERIA ABOVE AND BY REQUIRED MINIMUMS FOR ADA CLEARANCE AT STRIKE SIDE OF DOOR.
   B. FOR OPENINGS ADJACENT TO A PARTITION INTERSECTION NO DIMENSION WILL BE SHOWN ON THE PLAN, THE WIDTH IS EASTABLISHED BY CRITERIA ABOVE AND BY REQUIRED MINIMUMS FOR ADA CLEARANCE AT STRIKE SIDE OF DOOR

TRUE NORTH
PROJECT NORTH

C:\Autodesk\Revit\2004800 - Arch - SC Education Lottery Upfit - Adjusted Scope - V19.2_lbajarias@ssoe.com.rvt :FILE PATH
10/20/2021 3:08:31 PM :PRINT DATE

ssoe®
S&W

PROFESSIONAL SEALS:

SOUTH CAROLINA CERTIFICATE OF AUTHORIZATION SSOE, INC No. 746

STATE OF SOUTH CAROLINA WILLIAM J. FLEMING Columbia SC No. 3452 REGISTERED ARCHITECT
8-6-2021

SUBMITTAL/REVISION SCHEDULE:

NO.	DATE	DESCRIPTION
	8.06.2021	CONSTRUCTION DOCUMENTS

■ APPROVED FOR CONSTRUCTION
□ NOT APPROVED FOR CONSTRUCTION

CLIENT INFORMATION:

SOUTH CAROLINA EDUCATION LOTTERY

South Carolina Education Lottery®

CLIENT PROJECT #:	20048.00
SCEL PROJECT #:	Y20-N001-CB

PROJECT INFORMATION:

4TH FLOOR UPFIT

1333 MAIN STREET, COLUMBIA, SOUTH CAROLINA

SSOE/SW PROJECT #:	021-00531-00
SSOE/SW MANAGER:	BILL FLEMING

SSOE | STEVENS & WILKINSON
1501 Main Street, Suite 730
Columbia, SC 29201
T. (803) 765-0320

THIS DRAWING IS THE PROPERTY OF SSOE | STEVENS & WILKINSON. UNAUTHORIZED USE OF ANY KIND, INCLUDING USE ON OTHER PROJECTS, IS PROHIBITED.
© SSOE, INC. 2021

LEVEL 4 FLOOR PLAN

A1.41

MOUNTING HEIGHTS

1. INSTALL ALL ITEMS IN ACCORDANCE WITH THIS DRAWING
2. WHERE DIMENSIONS PROVIDED VARY FROM MANUFACTURER'S RECOMMENDATIONS FOR ADA BARRIER FREE MOUNTING HEIGHTS, THE MANUFACTURER'S RECOMMENDATIONS WILL BE THE STANDARD.
3. DIMENSIONS ARE TO TOP OF FINISH FLOOR
4. MAINTAIN INTEGRITY OF FIRE RATING WHERE ACCESSORIES ARE MOUNTED IN RATED WALLS
5. PROVIDE WOOD BLOCKING FOR ALL ACCESSORIES MOUNTED ON GWB PARTITION.

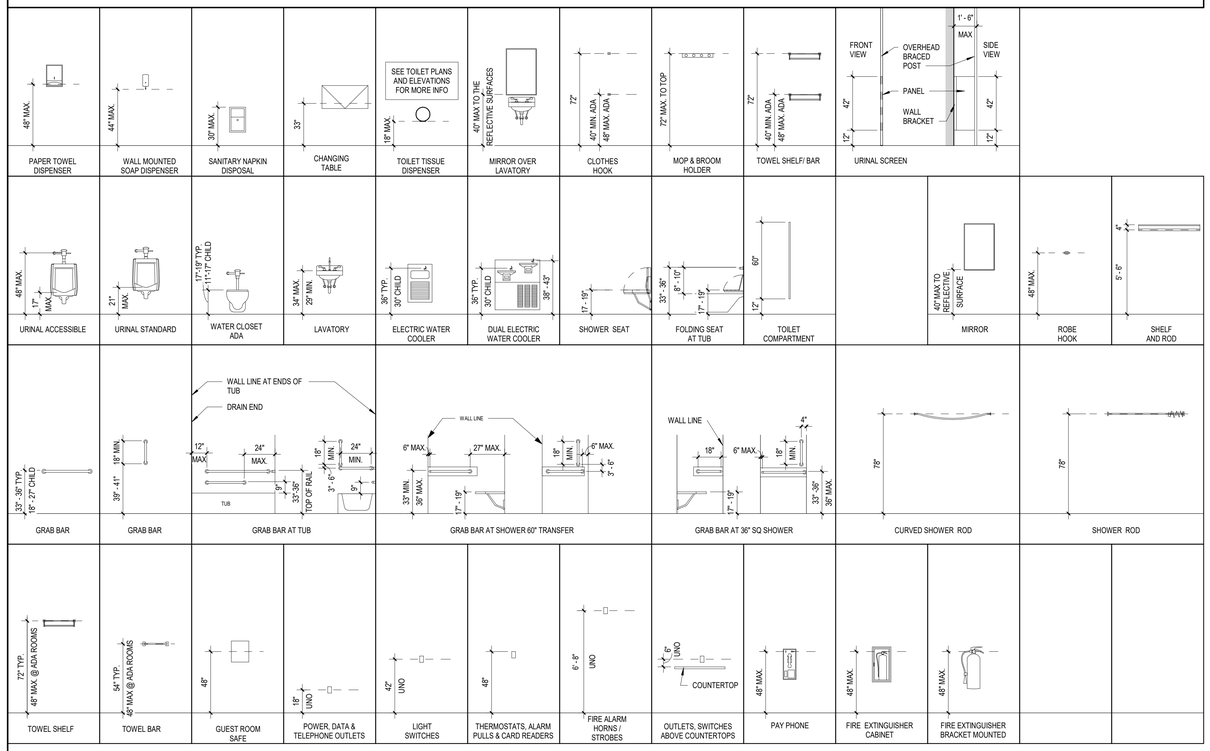

1 TYPICAL MOUNTING HEIGHTS
1/4" = 1'-0"

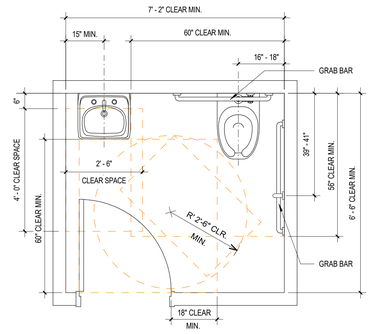

ACCESSIBLE TOILET ROOM

3 MIN. CLEARANCES AT ADA TOILET ROOMS
1/2" = 1'-0"

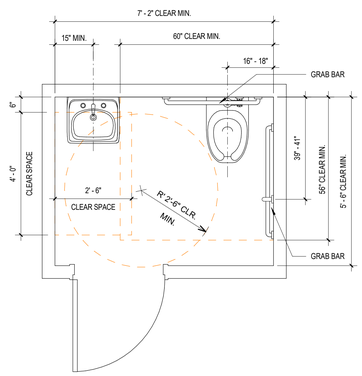

ACCESSIBLE TOILET ROOM

4 MIN. CLEARANCES AT ADA TOILET ROOMS
1/2" = 1'-0"

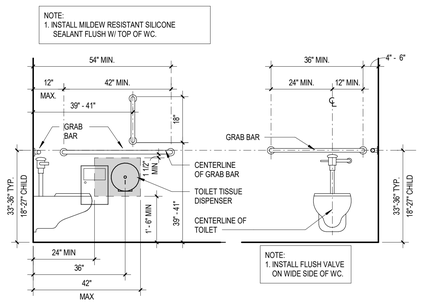

8 ADA TOILET & GRAB BAR ELEVATIONS
1/2" = 1'-0"

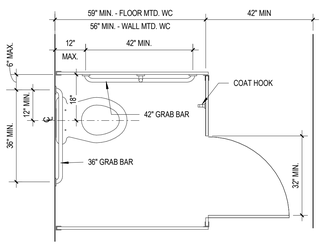

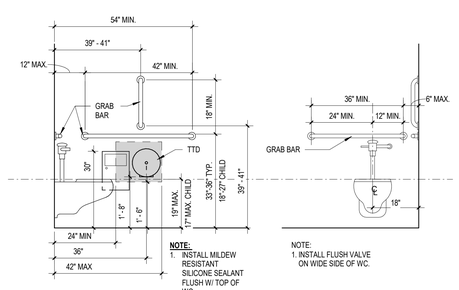

6 ADA TOILET PARTITION PLANS & ELEVATIONS
1/2" = 1'-0"

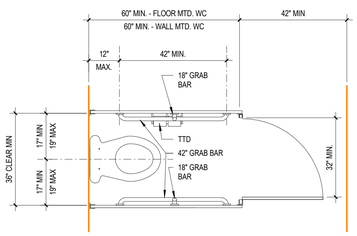

7 ADA AMBULATORY TOILET PARITTION PLANS
1/2" = 1'-0"

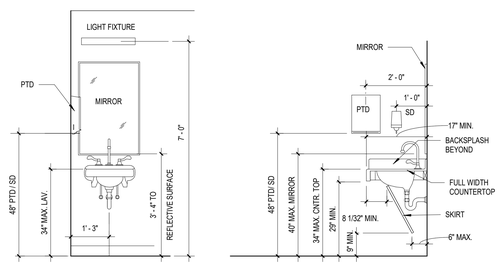

NOTES:
1. 1. INSTALL INSULATED BOOT ON HOT WATER & DRAIN LINES AT ALL WALL MTD. LAVATORIES & COUNTER MOUNTED SINKS.
2. INSTALL MILDEW RESISTANT SILICONE SEALANT FLUSH W/ TOP OF LAVATORY.

9 TYP WALL MOUNTED LAVATORY ELEVATION(S)
1/2" = 1'-0"

SSOE
S&W

PROFESSIONAL SEALS:

SOUTH CAROLINA CERTIFICATE OF AUTHORIZATION SSOE, INC No. 746

STATE OF SOUTH CAROLINA WILLIAM J. FLEMING Columbia SC No. 3452 REGISTERED ARCHITECT
8-6-2021

SUBMITTAL/REVISION SCHEDULE:

NO.	DATE	DESCRIPTION
	8.06.2021	CONSTRUCTION DOCUMENTS

■ APPROVED FOR CONSTRUCTION
□ NOT APPROVED FOR CONSTRUCTION

CLIENT INFORMATION:

SOUTH CAROLINA EDUCATION LOTTERY

South Carolina Education Lottery®

CLIENT PROJECT #:	20048.00
SCEL PROJECT #:	Y20-N001-CB

PROJECT INFORMATION:

4TH FLOOR UPFIT

1333 MAIN STREET, COLUMBIA, SOUTH CAROLINA

SSOE/SW PROJECT #:	021-00531-00
SSOE/SW MANAGER:	BILL FLEMING

SSOE | STEVENS & WILKINSON
1501 Main Street, Suite 730
Columbia, SC 29201
T. (803) 765-0320

THIS DRAWING IS THE PROPERTY OF SSOE | STEVENS & WILKINSON. UNAUTHORIZED USE OF ANY KIND, INCLUDING USE ON OTHER PROJECTS, IS PROHIBITED.
© SSOE, INC. 2021

ANSI ADA ACCESSIBLE DETAILS

A5-00A

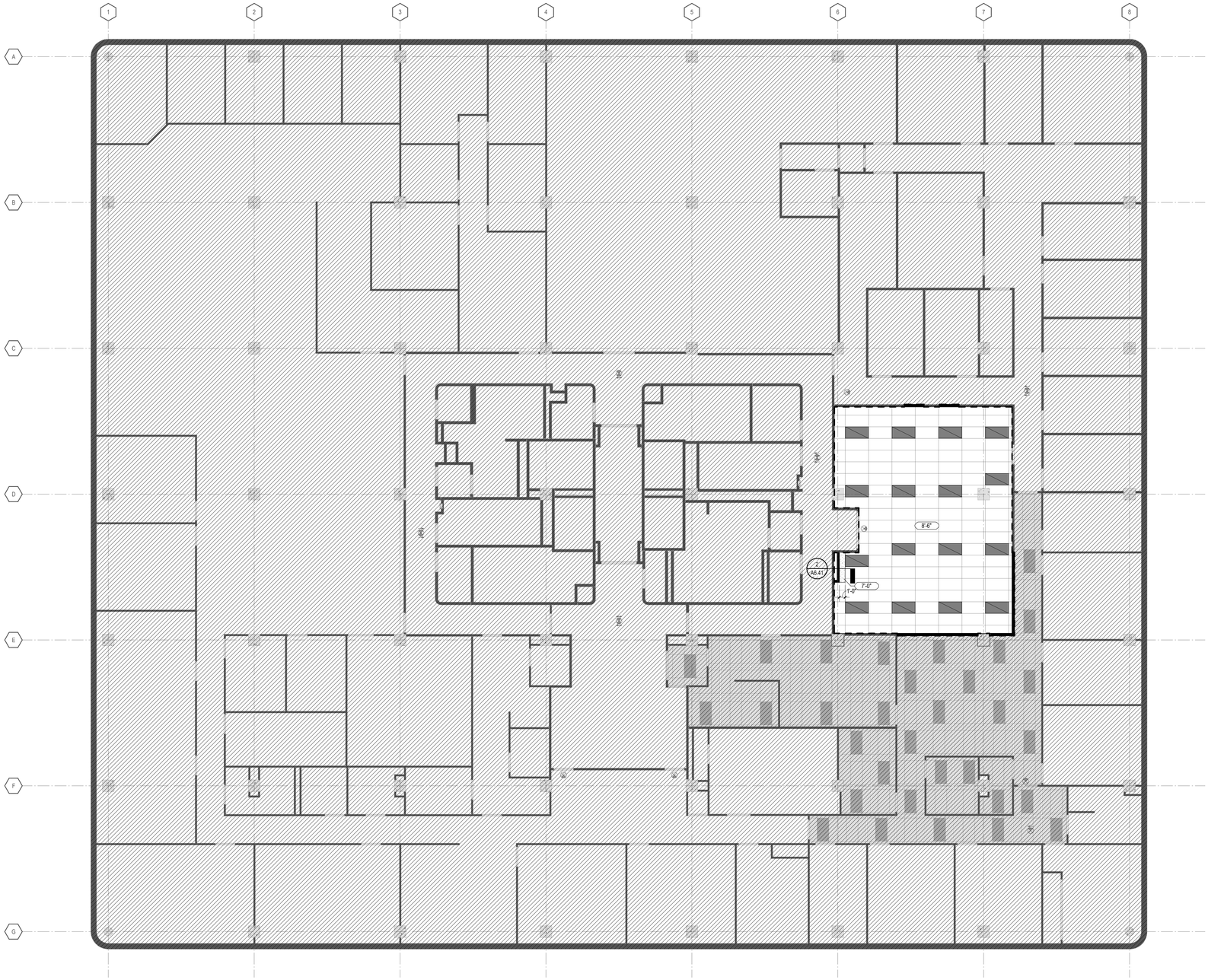

1 LEVEL 4 OVERALL RCP
1/8" = 1'-0"

GENERAL RCP NOTES

1. ALL CEILINGS ARE 8'-6" AFF UNO.
2. LAY CEILING GRIDS AS SHOWN ON REFLECTED CEILING PLANS. EACH ROOM GRID IS PLANNED FOR MAXIMUM TILE SIZE AND OPTIMUM LIGHTING LAYOUT.
3. SEE ELECTRICAL AND MECHANICAL DRAWINGS FOR LIGHTING AND HVAC INFORMATION.
4. NO DEVICES, DAMPERS, VALVES, PUMPS, ETC ARE TO BE LOCATED ABOVE SPACES WITH GWB CEILINGS. WHERE POSSIBLE, ACCESS TO JUNCTION BOXES FOR LIGHTS IS TO BE THROUGH FIXTURES. ALL DEVICES REQUIRING ACCESS ARE TO BE LOCATED IN ADJACENT SPACES WITH ACCESSIBLE CEILING SYSTEMS.
5. REFER TO ELECTRICAL DRAWINGS FOR FULL EXTENT OF EXITING DEVICES, INCLUDING WALL MOUNTED DEVICES.
6. BRACE ALL SUSPENDED CEILINGS FOR SEISMIC RESISTANCE IN ACCORDANCE WITH CODE REQUIREMENTS AND AS DETAILED.
7. ALL CEILING CAVITY AREAS USED AS RETURN AIR PLENUMS SHALL BE CONSTRUCTED WITH FIRE RESISTANT MATERIALS AND SHALL ONLY CONTAIN MATERIALS WHICH HAVE SMOKE DEVELOPED RATINGS NOT GREATER THAN 50 AND FLAME SPREAD RATINGS NOT GREATER THAN 25 AS DETERMINED IN ACCORDANCE WITH ASTM 84.
8. DO NOT USE PVC PIPE IN RETURN AIR PLENUMS.
9. ALL AREAS ABOVE CEILING SHALL BE FREE OF ACCUMULATIONS OF MUD, DUST, DIRT, CONSTRUCTION DEBRIS, ETC. CLEAN TOP SURFACES OF DUCTWORK, LIGHTS, PIPING, CONDUIT, AND OTHER CONSTRUCTION TO PROVIDE CLEAN SURFACE
10. ANY AREA ABOVE CEILING EXPOSED TO VIEW FROM BELOW SHALL BE NO LESS THAN PRIME PAINTED.
11. REPLACE DAMAGED EXISTING CEILING TILES WITHIN INDICATED WORK AREA AS NEEDED.

RCP LEGEND

2' x 4' ACOUSTICAL CEILING PANEL.
SEE CEILING TAG FOR TYPE

2'X5 EXISTING CEILING TO REMAIN

GYPSUM WALLBOARD CEILING

EXIT LIGHT FIXTURE - NEW
SEE ELECTRICAL DWGS.

EXIT LIGHT FIXTURE - EXISTING TO REMAIN
SEE ELECTRICAL DWGS.

NEW 2X4 TROFFER
SEE ELECTRICAL DWGS.

EXISTING 2X4 TROFFER TO REMAIN
SEE ELECTRICAL DWGS.

PROFESSIONAL SEALS:

SOUTH CAROLINA
SSOE, INC
No. 746
CERTIFICATE OF AUTHORIZATION

STATE OF SOUTH CAROLINA
WILLIAM J. FLEMING
Columbia, SC
No. 3452
REGISTERED ARCHITECT

8-6-2021

SUBMITTAL/REVISION SCHEDULE:

NO.	DATE	DESCRIPTION
	8.06.2021	CONSTRUCTION DOCUMENTS

■ APPROVED FOR CONSTRUCTION
□ NOT APPROVED FOR CONSTRUCTION

CLIENT INFORMATION:

SOUTH CAROLINA EDUCATION LOTTERY

CLIENT PROJECT #:	20048.00
SCEL PROJECT #:	Y20-N001-CB

PROJECT INFORMATION:

4TH FLOOR UPFIT

1333 MAIN STREET, COLUMBIA, SOUTH CAROLINA

SSOE/SW PROJECT #:	021-00531-00
SSOE/SW MANAGER:	BILL FLEMING

SSOE | STEVENS & WILKINSON
1501 Main Street, Suite 730
Columbia, SC 29201
T. (803) 765-0320

THIS DRAWING IS THE PROPERTY OF SSOE | STEVENS & WILKINSON. UNAUTHORIZED USE OF ANY KIND, INCLUDING USE ON OTHER PROJECTS, IS PROHIBITED.
© SSOE, INC. 2021

LEVEL 4 OVERALL REFLECTED CEILING PLAN

A6.40

C:\Autodesk\Revit\2004800 - Arch - SC Education Lottery Upfit - Adjusted Scope - V19.2_lbajarias@ssoe.com.rvt :**FILE PATH**
10/20/2021 3:08:34 PM :**PRINT DATE**

1 Level 4 - RCP
1/4" = 1'-0"

GENERAL RCP NOTES

1. ALL CEILINGS ARE 8'-6" AFF UNO.
2. LAY CEILING GRIDS AS SHOWN ON REFLECTED CEILING PLANS. EACH ROOM GRID IS PLANNED FOR MAXIMUM TILE SIZE AND OPTIMUM LIGHTING LAYOUT.
3. SEE ELECTRICAL AND MECHANICAL DRAWINGS FOR LIGHTING AND HVAC INFORMATION.
4. NO DEVICES, DAMPERS, VALVES, PUMPS, ETC ARE TO BE LOCATED ABOVE SPACES WITH GWB CEILINGS. WHERE POSSIBLE, ACCESS TO JUNCTION BOXES FOR LIGHTS IS TO BE THROUGH FIXTURES. ALL DEVICES REQUIRING ACCESS ARE TO BE LOCATED IN ADJACENT SPACES WITH ACCESSIBLE CEILING SYSTEMS.
5. REFER TO ELECTRICAL DRAWINGS FOR FULL EXTENT OF EXITING DEVICES, INCLUDING WALL MOUNTED DEVICES.
6. BRACE ALL SUSPENDED CEILINGS FOR SEISMIC RESISTANCE IN ACCORDANCE WITH CODE REQUIREMENTS AND AS DETAILED.
7. ALL CEILING CAVITY AREAS USED AS RETURN AIR PLENUMS SHALL BE CONSTRUCTED WITH FIRE RESISTANT MATERIALS AND SHALL ONLY CONTAIN MATERIALS WHICH HAVE SMOKE DEVELOPED RATINGS NOT GREATER THAN 50 AND FLAME SPREAD RATINGS NOT GREATER THAN 25 AS DETERMINED IN ACCORDANCE WITH ASTM 84.
8. DO NOT USE PVC PIPE IN RETURN AIR PLENUMS.
9. ALL AREAS ABOVE CEILING SHALL BE FREE OF ACCUMULATIONS OF MUD, DUST, DIRT, CONSTRUCTION DEBRIS, ETC. CLEAN TOP SURFACES OF DUCTWORK, LIGHTS, PIPING, CONDUIT, AND OTHER CONSTRUCTION TO PROVIDE CLEAN SURFACE
10. ANY AREA ABOVE CEILING EXPOSED TO VIEW FROM BELOW SHALL BE NO LESS THAN PRIME PAINTED.
11. REPLACE DAMAGED EXISTING CEILING TILES WITHIN INDICATED WORK AREA AS NEEDED.

RCP LEGEND

2' x 4' ACOUSTICAL CEILING PANEL. SEE CEILING TAG FOR TYPE

2'X5 EXISTING CEILING TO REMAIN

GYPSUM WALLBOARD CEILING

EXIT LIGHT FIXTURE - NEW SEE ELECTRICAL DWGS.

EXIT LIGHT FIXTURE - EXISTING TO REMAIN SEE ELECTRICAL DWGS.

NEW 2X4 TROFFER SEE ELECTRICAL DWGS.

EXISTING 2X4 TROFFER TO REMAIN SEE ELECTRICAL DWGS.

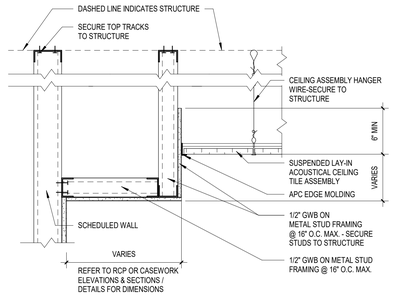

2 GWB SOFFIT DETAIL - APC CLNG
1 1/2" = 1'-0"

ssoe®

S&W

PROFESSIONAL SEALS:

SOUTH CAROLINA CERTIFICATE OF AUTHORIZATION SSOE, INC No. 746

STATE OF SOUTH CAROLINA WILLIAM J. FLEMING Columbia SC No. 3652 REGISTERED ARCHITECT

8-6-2021

SUBMITTAL/REVISION SCHEDULE:

NO.	DATE	DESCRIPTION
	8.06.2021	CONSTRUCTION DOCUMENTS

■ APPROVED FOR CONSTRUCTION
□ NOT APPROVED FOR CONSTRUCTION

CLIENT INFORMATION:

SOUTH CAROLINA EDUCATION LOTTERY

South Carolina Education Lottery®

CLIENT PROJECT #:	20048.00
SCEL PROJECT #:	Y20-N001-CB

PROJECT INFORMATION:

4TH FLOOR UPFIT

1333 MAIN STREET, COLUMBIA, SOUTH CAROLINA

SSOE/SW PROJECT #:	021-00531-00
SSOE/SW MANAGER:	BILL FLEMING

SSOE | STEVENS & WILKINSON
1501 Main Street, Suite 730
Columbia, SC 29201
T. (803) 765-0320

THIS DRAWING IS THE PROPERTY OF SSOE | STEVENS & WILKINSON. UNAUTHORIZED USE OF ANY KIND, INCLUDING USE ON OTHER PROJECTS, IS PROHIBITED.
© SSOE, INC. 2021

LEVEL 4 REFLECTED CEILING PLAN

A6.41

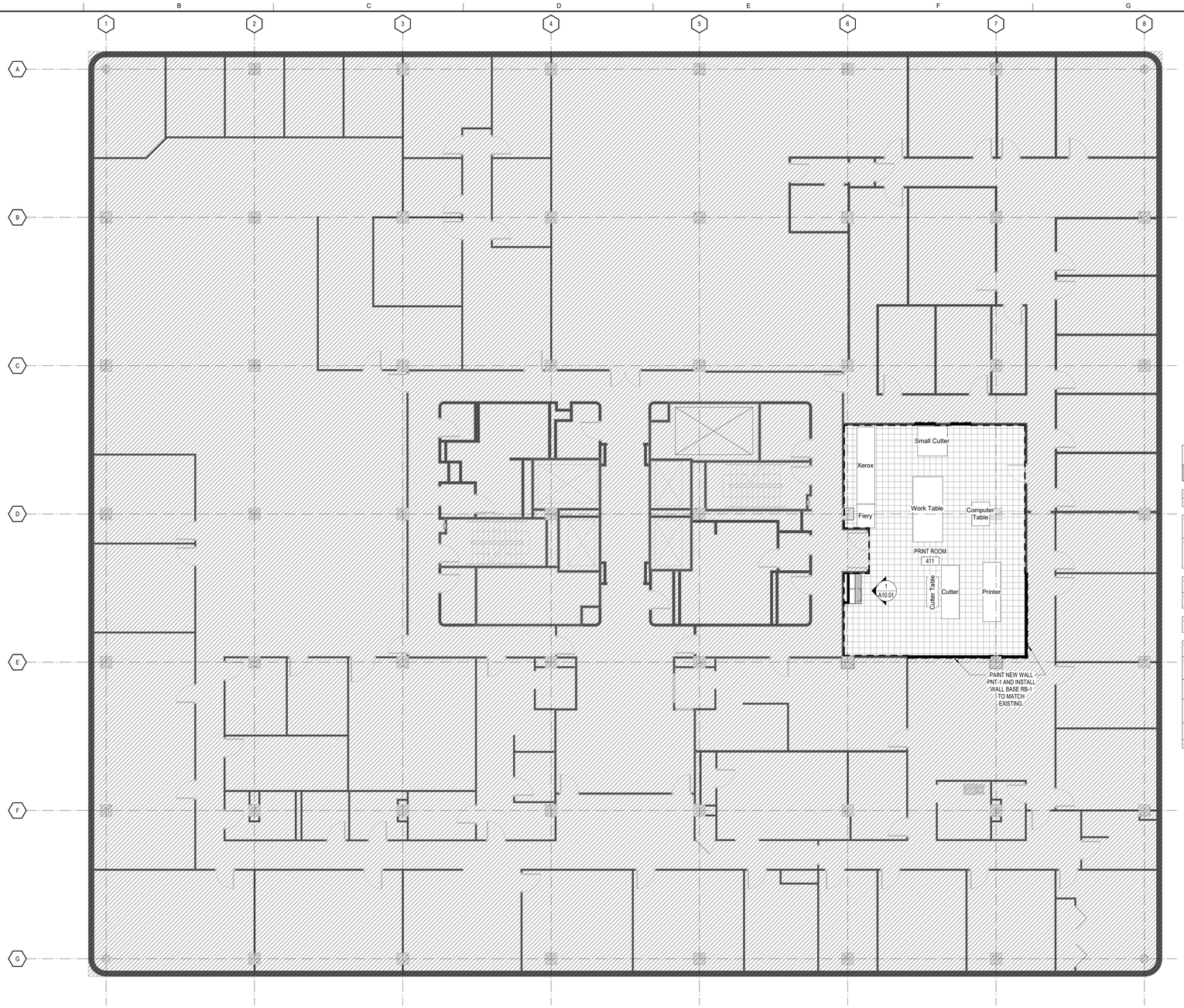

1 4TH FLOOR OVERALL PLAN
1/8" = 1'-0"

GENERAL FINISH NOTES

1. PAINT ALL FERROUS METAL EXPOSED TO MOISTURE, EXCEPT PREFINISHED METAL.
2. PAINT ALL STEEL STAIR SURFACES EXPOSED TO VIEW OR MOISTURE.
3. PAINT ALL NEW EXTERIOR HOLLOW METAL FRAMES AND DOORS IN ACCORDANCE WITH THE PAINTING SPECIFICATIONS AND IN COLOR INDICATED.
4. AT ALL TRANSITIONS BETWEEN DIFFERENT FLOOR FINISH MATERIALS, INSTALL SILLS OR THRESHOLDS AND/OR TERMINATE MATERIALS AS INDICATED ON THE TYPICAL TERMINATIONS DETAIL LEGEND. SEE SHEET **A10.01**.
5. AT ALL MILLWORK BASE CABINETS, PROVIDE BASE AS SCHEDULE FOR ADJACENT WALLS UNO.
6. REMOVE CURING COMPOUNDS FROM ALL CONCRETE SLABS IN ACCORDANCE WITH MANUFACTURER RECOMMENDATIONS PRIOR TO THE INSTALLATION OF ANY FLOOR FINISH MATERIALS.
7. MOISTURE TEST ALL NEW AND EXISTING CONCRETE SLABS ON GRADE PRIOR TO INSTALLATION OF ANY FLOOR FINISH MATERIALS. DO NOT INSTALL FINISHES UNLESS THE MOISTURE EMISSION RATE IS ACCEPTABLE TO THE FINISH MANUFACTURER AND MAINTAINS ALL WARRANTIES. PERFORM TESTS AS SPECIFIED. SCHEDULE SLAB POURS AND TESTS TO ALLOW PROPER CURING AND TESTING TIMES WITHOUT DELAYS TO THE OVERALL SCHEDULE.

FINISH LEGEND

- VCT-1 — 12X12 VINYL COMPOSITION TILE
- CPT-1 — BROADLOOM CARPET
- EXISTING CARPET TO REMAIN — BROADLOOM CARPET
- AREA NOT IN CONTRACT

FINISH LEGEND

SPECIFICATION SECTION	CODE	MANUFACTURER	PATTERN	COLOR	NOTES
064116	PLAM-1	WILSONART	1500-60	GREY	MILLWORK - VERTICAL
064116	PLAM-2	WILSONART	4845-60	TWILIGHT ZEPHER	MILLWORK - HORIZONTAL
095113	ACT-1	ARMSTRONG	MATCH EXISTING	WHITE	2X5 SQUARE LAY-IN ACOUSTICAL TILE .70 NRC OR GREATER
095113	ACT-1 GRID	ARMSTRONG	MATCH EXISTING	WHITE	ALTERNATE SEISMIC C OR D INSTALLATION WITH 7/8" WALL MOLDING AND CLIPS - SEE SITE SEISMIC CATAGORY
096513	RB-1	ROPPE	700 SERIES	177 STEEL BLUE	EXISTING OPEN OFFICE - 4" COVED WALL BASE
096513	RB-2	ROPPE	700 SERIES	640 CREEKBED	PRINT ROOM - 4" COVED WALL BASE
096519	VCT-1	ARMSTRONG	STANDARD EXCELON IMPERIAL TEXTURE	51911 CLASSIC WHITE	12X12 TILES
099123	PNT-1	SHERWIN WILLIAMS	SW7036	ACCESSIBLE BEIGE	EXISTING OPEN OFFICE PAINT - EGG SHELL
099123	PNT-1A	SHERWIN WILLAIMS	SW7036	ACCESSIBLE BEIGE	LIGHT INDUSTRIAL COATING - SW PRO INDUSTRIAL OR EQUAL - MP#151

ROOM FINISH SCHEDULE

ROOM NO.	ROOM NAME	FINISHES				COMMENTS	REV.
		WALLS	CEILINGS	FLOORS	WALL BASE		
LEVEL 4							
411	PRINT ROOM	PNT-1A	ACT-1	VCT-1	RB-2		

ssoe®

S&W

PROFESSIONAL SEALS:

SOUTH CAROLINA — SSOE, INC No. 746 — CERTIFICATE OF AUTHORIZATION

STATE OF SOUTH CAROLINA — WILLIAM J. FLEMING — Columbia SC — No. 3452 — REGISTERED ARCHITECT — 8-6-2021

SUBMITTAL/REVISION SCHEDULE:

NO.	DATE	DESCRIPTION
	8.06.2021	CONSTRUCTION DOCUMENTS

■ APPROVED FOR CONSTRUCTION
□ NOT APPROVED FOR CONSTRUCTION

CLIENT INFORMATION:

SOUTH CAROLINA EDUCATION LOTTERY

South Carolina Education Lottery®

CLIENT PROJECT #:	20048.00
SCEL PROJECT #:	Y20-N001-CB

PROJECT INFORMATION:

4TH FLOOR UPFIT

1333 MAIN STREET, COLUMBIA, SOUTH CAROLINA

SSOE/SW PROJECT #:	021-00531-00
SSOE/SW MANAGER:	BILL FLEMING

SSOE | STEVENS & WILKINSON
1501 Main Street, Suite 730
Columbia, SC 29201
T. (803) 765-0320

THIS DRAWING IS THE PROPERTY OF SSOE | STEVENS & WILKINSON. UNAUTHORIZED USE OF ANY KIND, INCLUDING USE ON OTHER PROJECTS, IS PROHIBITED.

© SSOE, INC. 2021

LEVEL 4 FINISH FLOOR OVERALL PLAN

A9.40

C:\Autodesk\Revit\2004800 - Arch - SC Education Lottery Upfit - Adjusted Scope - V19.2_lbajarias@ssoe.com.rvt :**FILE PATH**
10/20/2021 3:08:37 PM :**PRINT DATE**

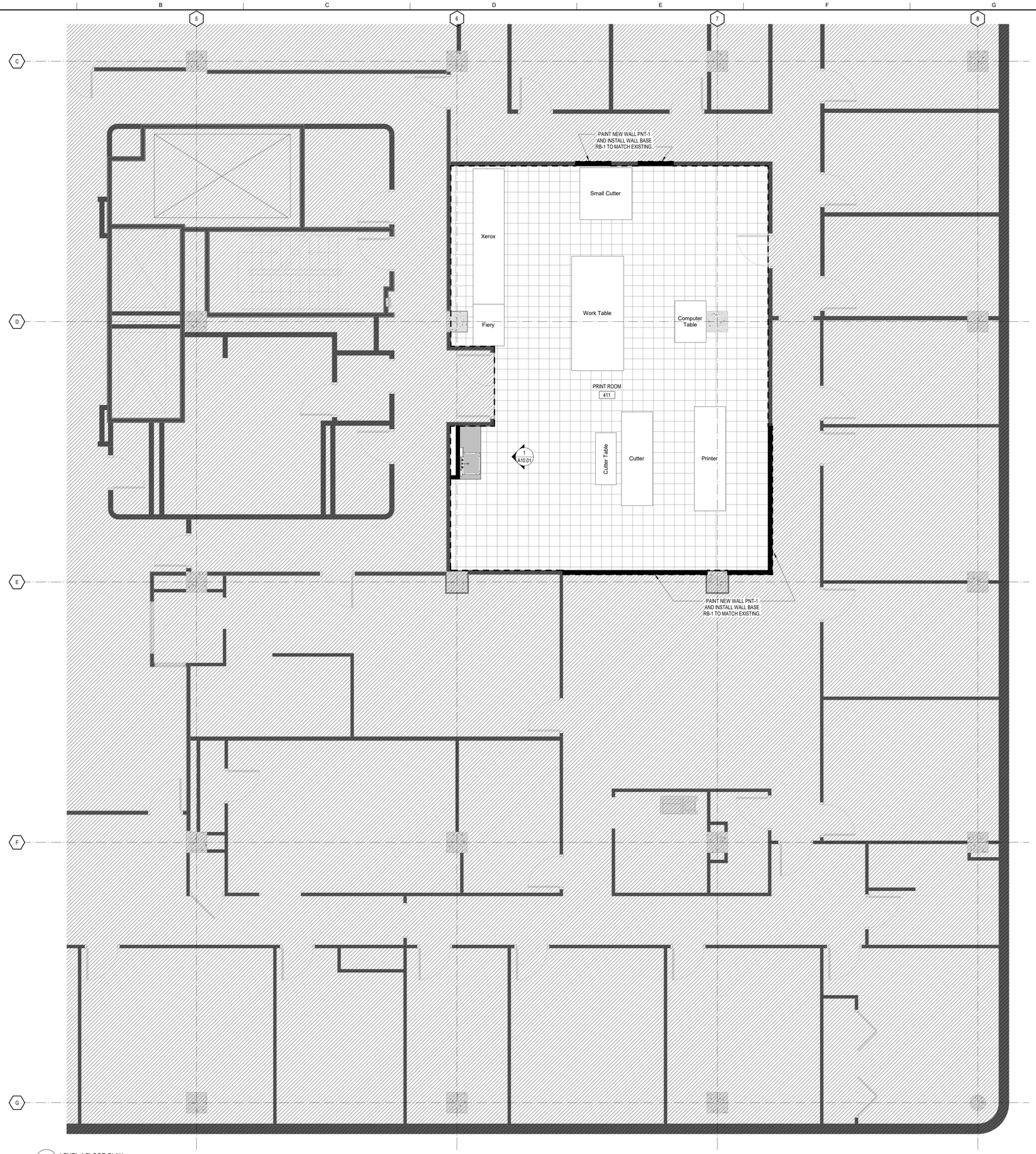

1 LEVEL 4 FLOOR PLAN
1/4" = 1'-0"

GENERAL FINISH NOTES

1. PAINT ALL FERROUS METAL EXPOSED TO MOISTURE, EXCEPT PREFINISHED METAL.
2. PAINT ALL STEEL STAIR SURFACES EXPOSED TO VIEW OR MOISTURE.
3. PAINT ALL NEW EXTERIOR HOLLOW METAL FRAMES AND DOORS IN ACCORDANCE WITH THE PAINTING SPECIFICATIONS AND IN COLOR INDICATED.
4. AT ALL TRANSITIONS BETWEEN DIFFERENT FLOOR FINISH MATERIALS, INSTALL SILLS OR THRESHOLDS AND/OR TERMINATE MATERIALS AS INDICATED ON THE TYPICAL TERMINATIONS DETAIL LEGEND. SEE SHEET **A10.01**.
5. AT ALL MILLWORK BASE CABINETS, PROVIDE BASE AS SCHEDULE FOR ADJACENT WALLS UNO.
6. REMOVE CURING COMPOUNDS FROM ALL CONCRETE SLABS IN ACCORDANCE WITH MANUFACTURER RECOMMENDATIONS PRIOR TO THE INSTALLATION OF ANY FLOOR FINISH MATERIALS.
7. MOISTURE TEST ALL NEW AND EXISTING CONCRETE SLABS ON GRADE PRIOR TO INSTALLATION OF ANY FLOOR FINISH MATERIALS. DO NOT INSTALL FINISHES UNLESS THE MOISTURE EMISSION RATE IS ACCEPTABLE TO THE FINISH MANUFACTURER AND MAINTAINS ALL WARRANTIES. PERFORM TESTS AS SPECIFIED. SCHEDULE SLAB POURS AND TESTS TO ALLOW PROPER CURING AND TESTING TIMES WITHOUT DELAYS TO THE OVERALL SCHEDULE.

FINISH LEGEND

VCT-1
12X12 VINYL COMPOSITION TILE

CPT-1
BROADLOOM CARPET

EXISTING CARPET TO REMAIN
BROADLOOM CARPET

AREA NOT IN CONTRACT

FINISH LEGEND

SPECIFICATION SECTION	CODE	MANUFACTURER	PATTERN	COLOR	NOTES
064116	PLAM-1	WILSONART	1500-60	GREY	MILLWORK - VERTICAL
064116	PLAM-2	WILSONART	4845-60	TWILIGHT ZEPHER	MILLWORK - HORIZONTAL
095113	ACT-1	ARMSTRONG	MATCH EXISTING	WHITE	2X5 SQUARE LAY-IN ACOUSTICAL TILE .70 NRC OR GREATER
095113	ACT-1 GRID	ARMSTRONG	MATCH EXISTING	WHITE	ALTERNATE SEISMIC C OR D INSTALLATION WITH 7/8" WALL MOLDING AND CLIPS - SEE SITE SEISMIC CATAGORY
096513	RB-1	ROPPE	700 SERIES	177 STEEL BLUE	EXISTING OPEN OFFICE - 4" COVED WALL BASE
096513	RB-2	ROPPE	700 SERIES	640 CREEKBED	PRINT ROOM - 4" COVED WALL BASE
096519	VCT-1	ARMSTRONG	STANDARD EXCELON IMPERIAL TEXTURE	51911 CLASSIC WHITE	12X12 TILES
099123	PNT-1	SHERWIN WILLIAMS	SW7036	ACCESSIBLE BEIGE	EXISTING OPEN OFFICE PAINT - EGG SHELL
099123	PNT-1A	SHERWIN WILLAIMS	SW7036	ACCESSIBLE BEIGE	LIGHT INDUSTRIAL COATING - SW PRO INDUSTRIAL OR EQUAL - MP#151

ROOM FINISH SCHEDULE

ROOM NO.	ROOM NAME	FINISHES				COMMENTS	REV.
		WALLS	CEILINGS	FLOORS	WALL BASE		
LEVEL 4							
411	PRINT ROOM	PNT-1A	ACT-1	VCT-1	RB-2		

ssoe®

S&W

PROFESSIONAL SEALS:

SOUTH CAROLINA SSOE, INC No. 746 CERTIFICATE OF AUTHORIZATION

STATE OF SOUTH CAROLINA WILLIAM J. FLEMING Columbia SC No. 3452 REGISTERED ARCHITECT

8-6-2021

SUBMITTAL/REVISION SCHEDULE:

NO.	DATE	DESCRIPTION
	8.06.2021	CONSTRUCTION DOCUMENTS

■ APPROVED FOR CONSTRUCTION
□ NOT APPROVED FOR CONSTRUCTION

CLIENT INFORMATION:

SOUTH CAROLINA EDUCATION LOTTERY

South Carolina Education Lottery®

CLIENT PROJECT #:	20048.00
SCEL PROJECT #:	Y20-N001-CB

PROJECT INFORMATION:

4TH FLOOR UPFIT

1333 MAIN STREET, COLUMBIA, SOUTH CAROLINA

SSOE/SW PROJECT #:	021-00531-00
SSOE/SW MANAGER:	BILL FLEMING

SSOE® | STEVENS & WILKINSON
1501 Main Street, Suite 730
Columbia, SC 29201
T. (803) 765-0320

THIS DRAWING IS THE PROPERTY OF SSOE | STEVENS & WILKINSON. UNAUTHORIZED USE OF ANY KIND, INCLUDING USE ON OTHER PROJECTS, IS PROHIBITED.

© SSOE, INC. 2021

LEVEL 4 FINISH FLOOR PLAN

A9.41

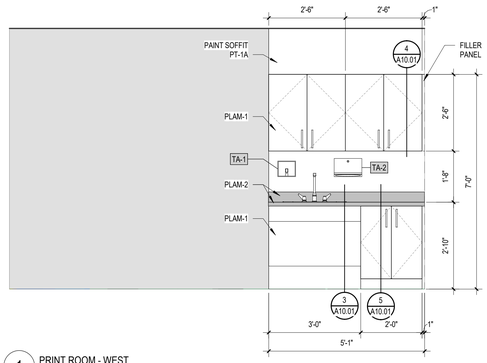

1 PRINT ROOM - WEST
1/2" = 1'-0"

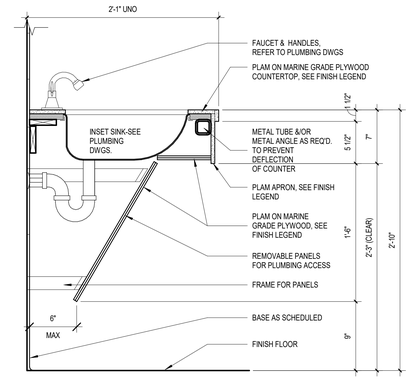

3 BASE SINK CABINET DETAIL
1 1/2" = 1'-0"

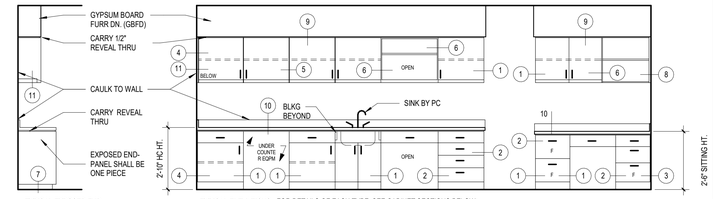

TYPICAL EXPOSED END

TYPICAL ELEVATIONS FOR DETAILS OF EACH TYPE, SEE CABINET SECTIONS BELOW; WHERE COUNTER TOP ABUTS WALL, PROVIDE END SPLASH

TOILET ACCESSORIES SCHEDULE - ALTERNATE #1

ITEM #	DESCRIPTION	MFR.	MODEL #	PROVIDED BY
TA-1	CONTURA SERIES SURFACE MOUNTED SOAP DISPENSER	BOBRICK	B-4112	CFCI
TA-2	SURFACE MOUNTED PAPER TOWEL DISPENSER - 10.75" W X 7.125" H X 4" DEEP	BOBRICK	B-2621	CFCI

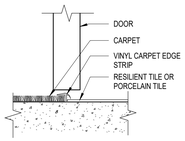

2 CPT TO VCT
3" = 1'-0"

FLOORING TRANSITION DETAIL LEGEND

	CARPET	PORCELAIN TILE	RESILIENT TILE (RTF)	QUARRY TILE	CERAMIC TILE	CONCRETE	TERRAZZO	ATHLETIC FLOOR	RESINOUS	EXTERIOR
CARPET	--		T1	--	--	--	--	--	--	--
PORCELAIN TILE	--	--		--	--	--	--	--	--	--
RESILIENT TILE	--	--	--	--	--	--	--	--	--	--
QUARRY TILE	--	--	--	--	--	--	--	--	--	--
CERAMIC TILE	--	--	--	--	--	--	--	--	--	--
CONCRETE	--	--	--	--	--	--	--	--	--	--
TERRAZZO	--	--	--	--	--	--	--	--	--	--
ATHLETIC FLOOR	--	--	--	--	--	--	--	--	--	--
RESINOUS	--	--	--	--	--	--	--	--	--	--
EXTERIOR	--	--	--	--	--	--	--	--	--	--

NOTE:
AT ALL TRANSITIONS BETWEEN FLOOR MATERIALS, INSTALL SILLS OR THRESHOLDS, AND OR TERMINATION MATERIALS AS INDICATED ON THESE DRAWINGS OR AS OTHERWISE RECOMMENDED BY MANUFACTURER'S WRITTEN INSTRUCTIONS.

NOTE:
ALL INTERIOR SURFACES TO BE FINISHED WITH WHITE CABINET LINER UNO

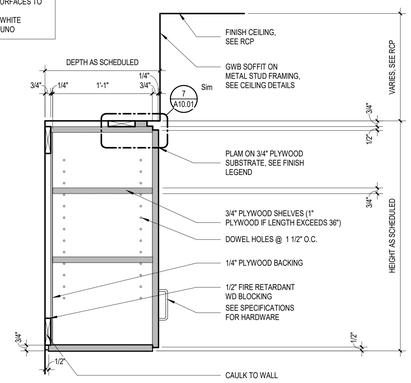

4 UPPER CABINET CLOSED SHELVING
1 1/2" = 1'-0"

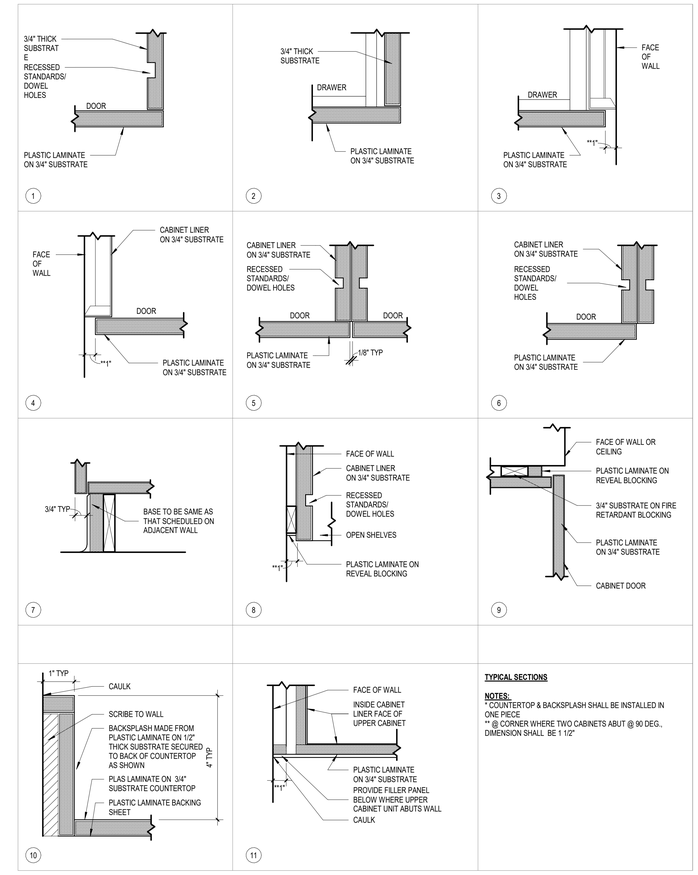

TYPICAL SECTIONS

NOTES:
* COUNTERTOP & BACKSPLASH SHALL BE INSTALLED IN ONE PIECE
** @ CORNER WHERE TWO CABINETS ABUT @ 90 DEG., DIMENSION SHALL BE 1 1/2"

6 MIL-TYPICAL MILLWORK OVERLAY ELEVATIONS & SECTIONS
1 1/2" = 1'-0"

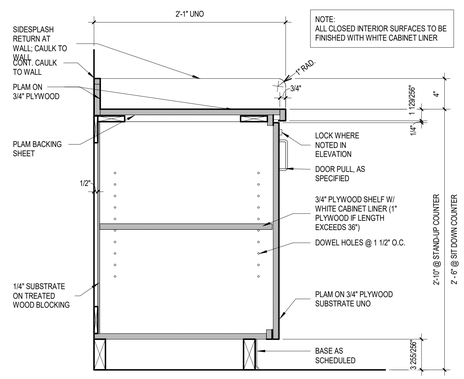

5 BASE CABINET DETAIL - DOORS
1 1/2" = 1'-0"

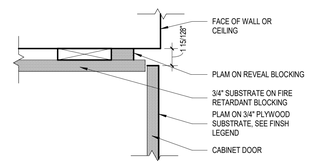

7 CABINET @ SOFFIT DETAIL
3" = 1'-0"

SSOE®
S&W

PROFESSIONAL SEALS:

SOUTH CAROLINA CERTIFICATE OF AUTHORIZATION SSOE, INC No. 746

STATE OF SOUTH CAROLINA WILLIAM J. FLEMING Columbia, SC No. 3452 REGISTERED ARCHITECT
8-6-2021

SUBMITTAL/REVISION SCHEDULE:

NO.	DATE	DESCRIPTION
	8.06.2021	CONSTRUCTION DOCUMENTS

■ APPROVED FOR CONSTRUCTION
□ NOT APPROVED FOR CONSTRUCTION

CLIENT INFORMATION:

SOUTH CAROLINA EDUCATION LOTTERY

South Carolina Education Lottery®

CLIENT PROJECT #:	20048.00
SCEL PROJECT #:	Y20-N001-CB

PROJECT INFORMATION:

4TH FLOOR UPFIT

1333 MAIN STREET, COLUMBIA, SOUTH CAROLINA

SSOE/SW PROJECT #:	021-00531-00
SSOE/SW MANAGER:	BILL FLEMING

SSOE® | STEVENS & WILKINSON
1501 Main Street, Suite 730
Columbia, SC 29201
T. (803) 765-0320

THIS DRAWING IS THE PROPERTY OF SSOE | STEVENS & WILKINSON. UNAUTHORIZED USE OF ANY KIND, INCLUDING USE ON OTHER PROJECTS, IS PROHIBITED.
© SSOE, INC. 2021

MILLWORK SECTIONS & DETAILS

A10.01

1 LEVEL 4 DEMOLITION PLAN
1/4" = 1'-0"

DEMOLITION LEGEND

B01	KEYNOTE - SEE KEYNOTE LEGEND
	AREA OF "NO WORK"
	AREA OF DEMOLITION AS DESCRIBED
	CONSTRUCTION TO BE DEMOLISHED (PLAN) [SEE KEYNOTES FOR MORE DETAIL]
	EXISTING EXTERIOR CONSTRUCTION (PLAN)
	EXISTING INTERIOR NON-RATED CONSTRUCTION
	EXISTING INTERIOR 1 HOUR CONSTRUCTION
	EXISTING INTERIOR 2 HOUR CONSTRUCTION

DEMOLITION KEYNOTE LEGEND

KEYNOTE #	DESCRIPTION
SLABS & FLOOR FINISHES	
A02	REMOVE EXISTING CARPET AND RUBBER BASE COMPLETE. PREPARE FLOOR TO RECEIVE NEW FINISHES AS SPECIFIED.
A03	REMOVE EXISTING VCT AND RUBBER BASE COMPLETE. PREPARE FLOOR TO RECEIVE NEW FINISHES AS SPECIFIED.
WALLS & WALL FINISHES	
B01	REMOVE WALL COMPLETELY. CAP ANY UTILITIES AS REQUIRED - SEE PLUMBING AND ELECTRICAL DRAWINGS FOR MORE INFORMATION. PREPARE ADJACENT WALL AND FLOOR SURFACES TO RECEIVE NEW FINISHES AS SPECIFIED.
B07	PREPARE WALL TO RECIEVE NEW FINISHES. SEE FINISH LEGEND AND SCHEDULES.
DOORS & FRAMES	
D01	REMOVE DOOR AND HOLLOW FRAME COMPLETELY PREPARE ADJACENT SURFACES TO RECEIVE FINISHES AS SPECIFIED AND INFILL OPENING TO MATCH ADJACENT SURFACES.
EQUIPMENT, CASEWORK & FURNITURE	
F16	PROTECT EXISTING WALL MOUNTED DEVICES TO REMAIN (INTERCOM, CLOCK, ETC.) REMOVE PROTECTION AND CLEAN UPON COMPLETION. ENSURE ITEM OPERATES AS REQUIRED.

GENERAL DEMOLITION NOTES

A. CONTRACTOR SHALL IMMEDIATELY NOTIFY THE ARCHITECT OF ANY DISCREPANCIES WITHIN THE CONSTRUCTION DOCUMENTS OR ANY FIELD CONDITIONS WHICH DIFFER FROM THOSE DESCRIBED WITHIN THE DOCUMENTS.
B. ALL REQUIRED DEMOLITION IS INCLUDED IN THE GENERAL CONTRACT. DEMOLITION CONSISTS OF THE REMOVAL OF ANY EXISTING ELEMENT WHICH INTERFERES WITH THE COMPLETION OF NEW CONSTRUCTION OR TEMPORARY EGRESS MEASURES.
C. DEBRIS RESULTING FROM DEMOLITION SHALL BE REMOVED FROM THE CONSTRUCTION SITE ON A DAILY BASIS.
D. ALL SURFACES DISTURBED BY DEMOLITION, CUTTING OR PATCHING SHALL BE LEFT WITH A "CLEAN CUT" TO FACILITATE THE MATCHING OF EXISTING SURFACES WITH ADJACENT NEW CONSTRUCTION.
E. ANY DAMAGE TO EXISTING CONDITIONS CAUSED BY DEMOLITION AND/OR NEW WORK SHALL BE REPAIRED AS DETAILED, BY THE CONTRACTOR RESPONSIBLE FOR THE DAMAGE.
F. THE CONTRACTOR SHALL INSTALL TEMPORARY BARRIERS AS REQUIRED TO PREVENT THE SPREAD OF DUST AND FUMES TO AREAS NOT INCLUDED IN THE WORK.
G. THE CONTRACTOR SHALL MAINTAIN EMERGENCY EGRESS OF OCCUPANTS OF ADJACENT BUILDINGS AND TENANTS AT ALL TIMES.
H. THE CONTRACTOR SHALL COORDINATE WITH THE OWNER AND OBTAIN APPROVALS FOR ANY ACTIVITIES WHICH INVOLVE ANY UTILITY INTERRUPTIONS OR EXCESSIVE NOISE.
I. THE CONTRACTOR SHALL PROTECT ADJACENT EXISTING ROOF SURFACES FROM DAMAGE BY DEMOLITION AND CONSTRUCTION ACTIVITIES. ANY REPAIR ANY DAMAGE THAT OCCURS.
J. DO NOT STORE ANY MATERIALS ON ADJACENT ROOFS, AND LIMIT FOOT TRAFFIC TO THE EXTENT POSSIBLE.
K. DIMENSIONS SHOWN ON EXISTING PLANS ARE SHOWN AS A REFERENCE AND SHALL BE CONSIDERED +/- 8" EXACT DIMENSIONS ARE REQUIRED. FIELD MEASUREMENTS SHALL BE TAKEN BY THE CONTRACTOR.
L. ANY DUCT WORK SHOWN PASSING THROUGH A NEW OR EXISTING WALL CARRYING A FIRE RATING SHALL BE EQUIPPED WITH APPROPRIATE FIRE RATED DAMPERS AT THE POINT OF INTERSECTION WITH THE WALL.
M. ANY NEW OR EXISTING PIPING CONDUIT OR WIRING PASSING THROUGH A NEW OR EXISTING WALL CARRYING A FIRE RATING SHALL BE SEALED TIGHT TO THE WALL WITH A UL APPROVED METHOD.
N. ALL PEELING PAINT SHALL BE SCRAPED FROM EXISTING WALLS AND WALLS SHALL BE CLEANED PRIOR TO REPAINTING.
O. WHEN EXISTING PAINTED SURFACES ARE PATCHED IN VISIBLE AREAS, THE ENTIRE SURFACE OR WALL SHALL BE PAINTED TO ACHIEVE A UNIFORM APPEARANCE.
P. ALL HOLES IN MASONRY WALLS, EXISTING OR MADE BY THE REMOVAL OF ANY FIXTURES OR EQUIPMENT, SHALL BE PATCHED WITH MASONRY TO MATCH EXISTING. INSTALL NEW MASONRY FLUSH WITH EXISTING ON BOTH SIDES.
Q. REMOVE ALL WALL BRACKETS, PLASTIC SHIELDS, HOOKS, CLIPS, NAILS, TAPE AND SCREWS ON EXISTING WALLS IN PREPARATION FOR SMOOTH CLEAN SURFACE (TYPICAL AT SPACES WHERE NEW FINISH IS SCHEDULED).
R. ALL DEMOLITION SHALL BE PERFORMED TO PREVENT THE ARBITRARY DESTRUCTION OR INTERRUPTION OF CONCEALED UTILITIES WHICH ARE INTENDED TO REMAIN IN USE AND THE ROUTING OF WHICH CAN NOT BE PRE-DETERMINED UNTIL DEMOLITION IS STARTED. ALL SUCH DISCOVERIES OF UTILITIES WHICH ARE IN A DIFFERENT LOCATION FROM THAT INDICATED, CHANGE DIRECTION FROM FLOOR-TO-FLOOR, ETC. OR ARE UNIDENTIFIED, SHALL BE REPORTED TO THE ARCHITECT BEFORE REMOVAL OR DISTURBANCE.
S. REMOVE ALL WALL MOUNTED ACCESSORIES IN AREAS OF DEMOLITION AND RENOVATION. PATCH/REPAIR WALLS TO MAKE SMOOTH AND PREPARE FOR NEW WALL FINISH. REINSTALL ANY REUSED/RELOCATED WALL ACCESSORIES PER MANUFACTURER'S INSTRUCTIONS.
T. SEE MECHANICAL AND ELECTRICAL DRAWINGS FOR MORE INFORMATION ON DEMOLITION AND CONSTRUCTION TO REMAIN.
U. AT AREAS WHERE NEW SYSTEMS ARE INSTALLED ABOVE EXISTING ACOUSTICAL LAY-IN CEILINGS, REMOVE THE CEILING TILES AND STORE IN A LOCATION AS DIRECTED BY THE OWNER. REINSTALL THE TILE UPON COMPLETION OF THE SYSTEMS WORK. PROTECT TILES FROM DAMAGE, DIRT OR STAINING. REPLACE ANY TILE WHICH DOES GET DAMAGED, DIRTY OR STAINED WITH NEW TILES MATCHING THE TYPE OF THE ADJACENT EXISTING TILES.
V. REFER TO SPECIFICATIONS FOR ADDITIONAL REQUIREMENTS. WHERE GENERAL DEMOLITION NOTES DO NOT AGREE WITH SPECIFICATIONS, REFER DISCREPANCY TO ARCHITECT FOR RESOLUTION.
W. EXISTING ELEVATIONS AND LOCATIONS TO BE JOINED SHALL BE VERIFIED BY THE CONTRACTOR BEFORE CONSTRUCTION. SHOULD THEY DIFFER FROM THOSE SHOWN ON THE DRAWINGS, THE CONTRACTOR SHALL NOTIFY THE ARCHITECT SO THAT MODIFICATIONS CAN BE MADE BEFORE PROCEEDING WITH THE WORK.

TRUE NORTH
PROJECT NORTH

ssoe®
S&W

PROFESSIONAL SEALS:

SOUTH CAROLINA
SSOE, INC
No. 746
CERTIFICATE OF AUTHORIZATION

STATE OF SOUTH CAROLINA
WILLIAM J. FLEMING
Columbia, SC
No. 3402
REGISTERED ARCHITECT
8-6-2021

SUBMITTAL/REVISION SCHEDULE:

NO.	DATE	DESCRIPTION
	8.06.2021	CONSTRUCTION DOCUMENTS

■ APPROVED FOR CONSTRUCTION
□ NOT APPROVED FOR CONSTRUCTION

CLIENT INFORMATION:

SOUTH CAROLINA EDUCATION LOTTERY

South Carolina Education Lottery®

CLIENT PROJECT #:	20048.00
SCEL PROJECT #:	Y20-N001-CB

PROJECT INFORMATION:

4TH FLOOR UPFIT

1333 MAIN STREET, COLUMBIA, SOUTH CAROLINA

SSOE/SW PROJECT #:	021-00531-00
SSOE/SW MANAGER:	BILL FLEMING

SSOE | STEVENS & WILKINSON
1501 Main Street, Suite 730
Columbia, SC 29201
T. (803) 765-0320

THIS DRAWING IS THE PROPERTY OF SSOE | STEVENS & WILKINSON. UNAUTHORIZED USE OF ANY KIND, INCLUDING USE ON OTHER PROJECTS, IS PROHIBITED.
© SSOE, INC. 2021

LEVEL 4 DEMOLITION PLAN

AD1.41

C:\Autodesk\Revit\2004800 - Arch - SC Education Lottery Upfit - Adjusted Scope - V19.2_lbajarias@ssoe.com.rvt :FILE PATH
10/20/2021 3:08:42 PM :PRINT DATE

1 LEVEL 4 DEMOLITION RCP
1/4" = 1'-0"

DEMOLITION LEGEND

B01	KEYNOTE - SEE KEYNOTE LEGEND
	AREA OF "NO WORK"
	AREA OF DEMOLITION AS DESCRIBED
	CONSTRUCTION TO BE DEMOLISHED (PLAN) [SEE KEYNOTES FOR MORE DETAIL]
	EXISTING EXTERIOR CONSTRUCTION (PLAN)
	EXISTING INTERIOR NON-RATED CONSTRUCTION
	EXISTING INTERIOR 1 HOUR CONSTRUCTION
	EXISTING INTERIOR 2 HOUR CONSTRUCTION

DEMOLITION KEYNOTE LEGEND

KEYNOTE #	DESCRIPTION
CEILINGS & CEILING MOUNTED EQUIPMENT	
E01	REMOVE EXISTING GYPSUM BOARD CEILING COMPLETE INCLUDING ALL LIGHTS AND DIFFUSERS. PROTECT ANY SPRAY FIRE PROOFING ENCOUNTERED. PREPARE ADJACENT SURFACES TO REMAIN TO RECEIVE NEW FINISHES AS SPECIFIED. SEE MECHANICAL AND ELECTRICAL DRAWINGS FOR MORE INFORMATION.
CEILINGS & CEILING MOUNTED EQUIPMENT	
E02	REMOVE EXISTING ACOUSTICAL CEILING AND GRID SYSTEM COMPLETE, INCLUDING ALL LIGHTS AND DIFFUSERS. PROTECT ANY SPRAY FIRE PROOFING ENCOUNTERED. PREPARE ADJACENT SURFACES TO REMAIN TO RECEIVE NEW FINISHES AS SPECIFIED. SEE MECHANICAL AND ELECTRICAL DRAWINGS FOR MORE INFORMATION.
CEILINGS & CEILING MOUNTED EQUIPMENT	
E03	REMOVE EXISTING LIGHT FIXTURES COMPLETELY. SEE ELECTRICAL DRAWINGS FOR MORE INFORMATION.

GENERAL DEMOLITION NOTES

A. CONTRACTOR SHALL IMMEDIATELY NOTIFY THE ARCHITECT OF ANY DISCREPANCIES WITHIN THE CONSTRUCTION DOCUMENTS OR ANY FIELD CONDITIONS WHICH DIFFER FROM THOSE DESCRIBED WITHIN THE DOCUMENTS.
B. ALL REQUIRED DEMOLITION IS INCLUDED IN THE GENERAL CONTRACT. DEMOLITION CONSISTS OF THE REMOVAL OF ANY EXISTING ELEMENT WHICH INTERFERES WITH THE COMPLETION OF NEW CONSTRUCTION OR TEMPORARY EGRESS MEASURES.
C. DEBRIS RESULTING FROM DEMOLITION SHALL BE REMOVED FROM THE CONSTRUCTION SITE ON A DAILY BASIS.
D. ALL SURFACES DISTURBED BY DEMOLITION, CUTTING OR PATCHING SHALL BE LEFT WITH A "CLEAN CUT" TO FACILITATE THE MATCHING OF EXISTING SURFACES WITH ADJACENT NEW CONSTRUCTION.
E. ANY DAMAGE TO EXISTING CONDITIONS CAUSED BY DEMOLITION AND/OR NEW WORK SHALL BE REPAIRED AS DETAILED, BY THE CONTRACTOR RESPONSIBLE FOR THE DAMAGE.
F. THE CONTRACTOR SHALL INSTALL TEMPORARY BARRIERS AS REQUIRED TO PREVENT THE SPREAD OF DUST AND FUMES TO AREAS NOT INCLUDED IN THE WORK.
G. THE CONTRACTOR SHALL MAINTAIN EMERGENCY EGRESS OF OCCUPANTS OF ADJACENT BUILDINGS AND TENANTS AT ALL TIMES.
H. THE CONTRACTOR SHALL COORDINATE WITH THE OWNER AND OBTAIN APPROVALS FOR ANY ACTIVITIES WHICH INVOLVE ANY UTILITY INTERRUPTIONS OR EXCESSIVE NOISE.
I. THE CONTRACTOR SHALL PROTECT ADJACENT EXISTING ROOF SURFACES FROM DAMAGE BY DEMOLITION AND CONSTRUCTION ACTIVITIES. ANY REPAIR ANY DAMAGE THAT OCCURS.
J. DO NOT STORE ANY MATERIALS ON ADJACENT ROOFS, AND LIMIT FOOT TRAFFIC TO THE EXTENT POSSIBLE.
K. DIMENSIONS SHOWN ON EXISTING PLANS ARE SHOWN AS A REFERENCE AND SHALL BE CONSIDERED +/- 8" EXACT DIMENSIONS ARE REQUIRED. FIELD MEASUREMENTS SHALL BE TAKEN BY THE CONTRACTOR.
L. ANY DUCT WORK SHOWN PASSING THROUGH A NEW OR EXISTING WALL CARRYING A FIRE RATING SHALL BE EQUIPPED WITH APPROPRIATE FIRE RATED DAMPERS AT THE POINT OF INTERSECTION WITH THE WALL.
M. ANY NEW OR EXISTING PIPING CONDUIT OR WIRING PASSING THROUGH A NEW OR EXISTING WALL CARRYING A FIRE RATING SHALL BE SEALED TIGHT TO THE WALL WITH A UL APPROVED METHOD.
N. ALL PEELING PAINT SHALL BE SCRAPED FROM EXISTING WALLS AND WALLS SHALL BE CLEANED PRIOR TO REPAINTING.
O. WHEN EXISTING PAINTED SURFACES ARE PATCHED IN VISIBLE AREAS, THE ENTIRE SURFACE OR WALL SHALL BE PAINTED TO ACHIEVE A UNIFORM APPEARANCE.
P. ALL HOLES IN MASONRY WALLS, EXISTING OR MADE BY THE REMOVAL OF ANY FIXTURES OR EQUIPMENT, SHALL BE PATCHED WITH MASONRY TO MATCH EXISTING. INSTALL NEW MASONRY FLUSH WITH EXISTING ON BOTH SIDES.
Q. REMOVE ALL WALL BRACKETS, PLASTIC SHIELDS, HOOKS, CLIPS, NAILS, TAPE AND SCREWS ON EXISTING WALLS IN PREPARATION FOR SMOOTH CLEAN SURFACE (TYPICAL AT SPACES WHERE NEW FINISH IS SCHEDULED).
R. ALL DEMOLITION SHALL BE PERFORMED TO PREVENT THE ARBITRARY DESTRUCTION OR INTERRUPTION OF CONCEALED UTILITIES WHICH ARE INTENDED TO REMAIN IN USE AND THE ROUTING OF WHICH CAN NOT BE PRE-DETERMINED UNTIL DEMOLITION IS STARTED. ALL SUCH DISCOVERIES OF UTILITIES WHICH ARE IN A DIFFERENT LOCATION FROM THAT INDICATED, CHANGE DIRECTION FROM FLOOR-TO-FLOOR, ETC. OR ARE UNIDENTIFIED, SHALL BE REPORTED TO THE ARCHITECT BEFORE REMOVAL OR DISTURBANCE.
S. REMOVE ALL WALL MOUNTED ACCESSORIES IN AREAS OF DEMOLITION AND RENOVATION. PATCH/REPAIR WALLS TO MAKE SMOOTH AND PREPARE FOR NEW WALL FINISH. REINSTALL ANY REUSED/RELOCATED WALL ACCESSORIES PER MANUFACTURER'S INSTRUCTIONS.
T. SEE MECHANICAL AND ELECTRICAL DRAWINGS FOR MORE INFORMATION ON DEMOLITION AND CONSTRUCTION TO REMAIN.
U. AT AREAS WHERE NEW SYSTEMS ARE INSTALLED ABOVE EXISTING ACOUSTICAL LAY-IN CEILINGS, REMOVE THE CEILING TILES AND STORE IN A LOCATION AS DIRECTED BY THE OWNER. REINSTALL THE TILE UPON COMPLETION OF THE SYSTEMS WORK. PROTECT TILES FROM DAMAGE, DIRT OR STAINING. REPLACE ANY TILE WHICH DOES GET DAMAGED, DIRTY OR STAINED WITH NEW TILES MATCHING THE TYPE OF THE ADJACENT EXISTING TILES.
V. REFER TO SPECIFICATIONS FOR ADDITIONAL REQUIREMENTS. WHERE GENERAL DEMOLITION NOTES DO NOT AGREE WITH SPECIFICATIONS, REFER DISCREPANCY TO ARCHITECT FOR RESOLUTION.
W. EXISTING ELEVATIONS AND LOCATIONS TO BE JOINED SHALL BE VERIFIED BY THE CONTRACTOR BEFORE CONSTRUCTION. SHOULD THEY DIFFER FROM THOSE SHOWN ON THE DRAWINGS, THE CONTRACTOR SHALL NOTIFY THE ARCHITECT SO THAT MODIFICATIONS CAN BE MADE BEFORE PROCEEDING WITH THE WORK.

ssoe®
S&W

PROFESSIONAL SEALS:

SOUTH CAROLINA CERTIFICATE OF AUTHORIZATION SSOE, INC No. 746

STATE OF SOUTH CAROLINA WILLIAM J. FLEMING Columbia SC No. 3452 REGISTERED ARCHITECT
8-6-2021

SUBMITTAL/REVISION SCHEDULE:

NO.	DATE	DESCRIPTION
	8.06.2021	CONSTRUCTION DOCUMENTS

■ APPROVED FOR CONSTRUCTION
□ NOT APPROVED FOR CONSTRUCTION

CLIENT INFORMATION:

SOUTH CAROLINA EDUCATION LOTTERY

South Carolina Education Lottery®

CLIENT PROJECT #:	20048.00
SCEL PROJECT #:	Y20-N001-CB

PROJECT INFORMATION:

4TH FLOOR UPFIT

1333 MAIN STREET, COLUMBIA, SOUTH CAROLINA

SSOE/SW PROJECT #:	021-00531-00
SSOE/SW MANAGER:	BILL FLEMING

SSOE | STEVENS & WILKINSON
1501 Main Street, Suite 730
Columbia, SC 29201
T. (803) 765-0320

THIS DRAWING IS THE PROPERTY OF SSOE | STEVENS & WILKINSON. UNAUTHORIZED USE OF ANY KIND, INCLUDING USE ON OTHER PROJECTS, IS PROHIBITED.
© SSOE, INC. 2021

LEVEL 4 DEMOLITION REFLECTED CEILING PLAN

AD6.41

C:\Autodesk\Revit\2004800 - Arch - SC Education Lottery Upfit - Adjusted Scope - V19.2_lbajarias@ssoe.com.rvt :FILE PATH
10/20/2021 3:08:44 PM :PRINT DATE

SEISMIC AND WIND REQUIREMENTS FOR FIRE PROTECTION SYSTEMS

INFORMATION FOR IBC-2018 /ASCE 7-16

A. EQUIPMENT, APPLIANCES AND SUPPORTS (INLCUDING ROOF CURBS & ROOF RAILS) EXPOSED TO WIND SHALL BE DESIGNED AND INSTALLED TO RESIST THE WIND PRESSURES DETERMINED IN ACCORDANCE WITH THE INTERNATIONAL BUILDING CODE. WHERE SEISMIC RESTRAINT IS REQUIRED, THE MORE DEMANDING FORCE OF WIND AND SEISMIC MUST BE USED. SEE SEISMIC INFORMATION CONTAINED IN THE STRUCTURAL DRAWINGS FOR SITE SPECIFIC INFORMATION ON SEISMIC DESIGN CATEGORY.SEE EQUIPMENT SCHEDULES AND DETAILS FOR SPECIFIC COMPONENT IMPORTANCE FACTOR DESIGNATIONS.
B. USE APPLICABLE TABLE BELOW TO DETERMINE SEISMIC RESTRAINT REQUIREMENTS FOR EACH MECHANICAL COMPONENT.
C. FOR ALL COMPONENTS REQUIRING SEISMIC RESTRAINT, THE COMPONENT SUPPORTS AND ATTACHMENTS SHALL BE DESIGNED BY A REGISTERED DESIGN PROFESSIONAL.
D. WHERE SEISMIC RESTRAINT IS REQUIRED, HOUSEKEEPING PADS NEEDED FOR THE INSTALLATION OF EQUIPMENT UNDER THIS CONTRACT MUST BE DESIGNED BY THE SEISMIC ENGINEER. DO NOT POUR ANY HOUSEKEEPING PADS PRIOR TO THE THE RECEIPT OF THE SEISMIC SUBMITTAL
E. SEISMIC RESTRAINTS FOR PIPING MUST BE SHOWN ON LAYOUT DRAWINGS SHOWING SPECIFIC RESTRAINT LOCATIONS ALONG WITH ACCOMPANYING DETAILS AND CALCULATIONS.
F. SEISMIC CATEGORY "C".

COMPONENT IMPORTANCE FACTOR (Ip) DESIGNATION

Ip = 1.0	Ip = 1.5
	• ALL PIPING, CONTROLLERS, APPURTENANCES AND ELECTRICAL EQUIPMENT THAT ARE PART OF STAND PIPING AND SPRINKLER SYSTEMS

SEISMIC DESIGN CATEGORY C

	COMPONENT IMPORTANCE FACTOR (Ip)	
	1.0	1.5
COMPONENT IDENTIFICATION	SEISMIC RESTRAINT REQUIREMENT	SEISMIC RESTRAINT REQUIREMENT
ROOF MOUNTED	NOT REQUIRED	RESTRAIN ALL
FLOOR MOUNTED	NOT REQUIRED	RESTRAIN ALL
WALL MOUNTED	NOT REQUIRED	RESTRAIN ALL
COMPONENT SUPPORTS	NOT REQUIRED	RESTRAIN ALL
SUSPENDED EQUIPMENT	NOT REQUIRED	RESTRAIN ALL
SUSPENDED DUCTILE PIPING (STEEL, ALUMINUM, COPPER, ETC.)	NOT REQUIRED	>2" (SEE NOTE 3,4)
SUSPENDED NON DUCTILE PIPING (CAST IRON, PLASTIC, CERAMIC)	NOT REQUIRED	RESTRAIN ALL (SEE NOTE 3,4)
SUSPENDED PIPE ON TRAPEZE	NOT REQUIRED	RESTRAIN IF ANY PIPE ON TRAPEZE > 2" RESTRAIN IF TOTAL WEIGHT OF PIPES ON TRAPEZE > 10 LBS/FT (SEE NOTE 3,4)
COMPONENT CERTIFICATION (SEE NOTE 4)	NOT REQUIRED	REQUIRED

NOTES:
1. EQUIPMENT 20 LBS. OR LESS IS EXEMPT IF FLEXIBLE CONNECTIONS ARE PROVIDED BETWEEN THE COMPONENT AND ASSOCIATED PIPING AND CONDUIT.
2. RESTRAINTS ARE NOT REQUIRED IF THE COMPONENT WEIGHTS 400 LBS. OR LESS, IS MOUNTED AT 4 FT. OR LESS ABOVE A FLOOR, AND HAS FLEXIBLE CONNECTIONS BETWEEN THE COMPONENT AND ASSOCIATED PIPING AND CONDUIT.
3. RESTRAINT IS NOT REQUIRED IF THE PIPING IS SUPPORTED BY HANGERS AND EACH HANGER IN THE PIPING RUN IS 12 IN. OR LESS IN LENGTH FROM THE TOP OF THE PIPE TO THE SUPPORTING STRUCTURE. WHERE PIPES ARE SUPPORTED ON A TRAPEZE, THE TRAPEZE SHALL BE SUPPORTED BY HANGERS HAVING A LENGTH OF 12 IN. OR LESS. WHERE ROD HANGERS ARE USED, THEY SHALL BE EQUIPPED WITH SWIVELS, EYE NUTS OR OTHER DEVICES TO PREVENT BENDING IN THE ROD.
4. COMPONENT CERTIFICATION MUST BE SUPPLIED BY THE EQUIPMENT MANUFACTURER AT TIME OF SUBMITTAL FOR REVIEW BY ENGINEER OF RECORD.

DEMOLITION NOTES

1. THESE DRAWINGS ARE BASED ON EXISTING PLANS. REFER TO ARCHITECTURAL DRAWINGS FOR EXACT LOCATION OF DEMOLITION AREAS. THE CONTRACTOR SHALL THOROUGHLY INVESTIGATE THE EXISTING CONDITIONS PRIOR TO BID.

2. THE PURPOSE AND INTENT OF DEMOLITION SHEET IS TO SHOW THE CONTRACTOR ITEMS REQUIRED TO BE REMOVED, BUT IS IN NO WAY LIMITED TO THE ITEMS SHOWN. ALL BIDDERS ARE REQUIRED TO MAKE AN ON-SITE VISIT AND INSPECT EXISTING MECHANICAL CONDITIONS BEFORE FINAL BID DATE.

3. ON-SITE INSPECTIONS ARE REQUIRED TO OCCUR PRIOR TO FINAL BID DATE TO DETERMINE ALL EXISTING CONDITIONS AND COORDINATE POWER DOWN TIMES. BIDDING CONTRACTORS ARE REQUIRED TO SURVEY ALL AREAS OF THE BUILDING PRIOR TO BIDDING TO VIEW THE EXISTING CONDITIONS. ANY ADDITIONAL WORK REQUIRED OR CLARIFICATIONS TO THE WORK SHOWN THAT COULD HAVE BEEN REASONABLY VERIFIED BY THE SURVEY SHALL BE THE RESPONSIBILITY OF THE CONTRACTOR.

4. PERFORM ALL CUTTING AND DRILLING REQUIRED. PATCH ALL HOLES, PAINT AND OTHERWISE REPAIR ALL DAMAGES TO THE BUILDING STRUCTURE AND SURFACES WHICH OCCUR AS A RESULT OF THIS PROJECT. REPAIRS SHALL RESTORE THE STRUCTURE TO THE SAME CONDITION EXISTING PRIOR TO BEGINNING WORK.

5. ANY DAMAGE TO EXISTING CONDITIONS CAUSED BY DEMOLITION AND/OR NEW WORK SHALL BE REPAIRED BY THE CONTRACTOR RESPONSIBLE FOR THE DAMAGE.

6. ANY NEW OR EXISTING PIPING PASSING THROUGH A NEW OR EXISTING WALL CARRYING A FIRE RATING SHALL BE SEALED TIGHT TO THE WALL WITH A UL APPROVED METHOD.

7. ALL DEMOLITION SHALL BE PERFORMED TO PREVENT THE ARBITRARY DESTRUCTION OR INTERRUPTION OF CONCEALED UTILITIES WHICH ARE INTENDED TO REMAIN IN USE AND THE ROUTING OF WHICH CAN NOT BE PREDETERMINED UNTIL DEMOLITION IS STARTED. ALL SUCH DISCOVERIES OF UTILITIES WHICH ARE IN A DIFFERENT LOCATION FROM THAT INDICATED, CHANGE DIRECTION FROM FLOOR-TO-FLOOR, ETC. OR ARE UNIDENTIFIED, SHALL BE REPORTED TO THE ARCHITECT BEFORE REMOVAL OR DISTURBANCE.

8. REMOVE, STORE, CLEAN, REINSTALL, RECONNECT, AND MAKE OPERATIONAL EQUIPMENT INDICATED FOR RELOCATION.

9. CONTRACTOR IS RESPONSIBLE FOR MAINTAINING BUILDING SERVICES DURING DEMOLITION INCLUDING ALL TESTING, SERVICE FEES, RENTAL OF TEMPORARY EQUIPMENT OR INSTALLATION AND CONNECTION OF TEMPORARY SERVICES.

10. WHERE WALLS, FLOORS OR CEILINGS ARE CUT, REMOVED OR DAMAGED FOR INVESTIGATING EXISTING CONDITIONS, DEMOLISHING SERVICES, INSTALLING NEW SERVICES, ETC. THE CONTRACTORS SHALL COORDINATE THE PATCHING OF THE WALLS, FLOORS & CEILINGS TO MATCH EXISTING WITH THE BUILDING FINISHES CONTRACTOR AND/OR GENERAL CONTRACTOR.

11. NEW WORK SHOWN IS SUGGESTED ROUTING. CONTRACTOR SHALL FIELD INVESTIGATE EXISTING SERVICES AVAILABLE. BASED ON THE CONTRACTORS DISCOVERIES, THEY MAY SUGGEST ALTERNATE ROUTINGS. THE ENGINEER OF RECORD SHALL MAKE THE FINAL DETERMINATION ON WHETHER THE SERVICES SHALL BE INSTALLED AS SHOWN OR AS SUGGESTED BY THE CONTRACTOR.

12. WHERE PIPE, INSULATION, OR EQUIPMENT TO REMAIN IS DAMAGED OR DISTURBED, REMOVE DAMAGED PORTIONS AND INSTALL NEW PRODUCTS OF EQUAL CAPACITY AND QUALITY.

SYMBOLS

—FP-D—	FP-D 1
—FP-O—	FP-O 1
—FP-PA—	FP-PA 1
—FP-W—	FP-W 1
—FP-DOM-W—	FP-DOM-W 2
	UPRIGHT SPRINKLER HEAD
	PENDENT SPRINKLER HEAD
	RECESSED SPRINKLER HEAD
	CONCEALED SPRINKLER HEAD
	SIDEWALL SPRINKLER HEAD
	EXTENDED COVERAGE SIDEWALL SPRINKLER HEAD
D	'D' REPRESENTS DRY SPRINKLER HEAD
48"x18" S/A	OBSTRUCTION FROM DUCTWORK 48" AND GREATER

ABBREVIATIONS

&	AND	HYD	HYDRANT
Ø	ROUND	ID	INDIRECT
A	AIR	IN	INCH
AB	ABOVE BASE	INL	INLET
ABV	ABOVE	INSUL	INSULATION
AC	AIR CONDITIONING	INT	INTERIOR
ACOUS	ACOUSTICAL	INV	INVERT
AD	AREA DRAIN	INWG	INCHES WATER GAUGE
ADD	ADDENDUM	JT	JOINT
ADDL	ADDITIONAL	LAB	LABORATORY
AFF	ABOVE FINISHED FLOOR	LB	POUND
AFUE	ANNUAL FUEL UTILIZATION EFFICIENCY	LB/HR	POUNDS PER HOUR
AG	ABOVE GROUND	LAT	LEAVING AIR TEMPERATURE
ALT	ALTERNATE	LF	LINEAL FOOT
ALUM	ALUMINUM	LOC	LOCATION
AP	ACCESS PANEL	LP	LOW PRESSURE
APPROX	APPROXIMATE	LPG	LIQUEFIED PETROLEUM GAS
ARCH	ARCHITECT/ARCHITECTURAL	LR	LIQUID REFRIGERANT
AV	ACID RESISTANT VENT	LVR	LOUVER
AW	ACID RESISTANT WASTE	LWT	LEAVING WATER TEMPERATURE
AUTO	AUTOMATIC	M/A	MIXED AIR
BFF	BELOW FINISHED FLOOR	MAN	MANUAL
BLDG	BUILDING	MATL	MATERIAL
BLW	BELOW	MAV	MANUAL AIR VENT
BM	BEAM	MAX	MAXIMUM
BO	BY OTHER	MBD	MOTORIZED BYPASS DAMPER
BOT	BOTTOM	MBH	ONE THOUSAND BTU PER HOUR
BSMT	BASEMENT	MCF	ONE THOUSAND CUBIC FEET
BTU	BRITISH THERMAL UNITS	MCW	MAKE-UP COLD WATER
BTUH	BRITISH THERMAL UNITS PER HOUR	MD	MOTORIZED DAMPER
BTWN	BETWEEN	MECH	MECHANICAL
CAP	CAPACITY	MFR	MANUFACTURER
CB	CATCH BASIN	MH	MANHOLE
CCW	COUNTER CLOCKWISE	MIN	MINIMUM
CFCV	CONSTANT FLOW CONTROL VALVE	MISC	MISCELLANEOUS
CFM	CUBIC FEET PER MINUTE	MTR	MOTOR
CHW	CIRCULATING HOT WATER	MU/A	MAKE-UP/AIR
CI	CAST IRON	N	NECK
CLG	CEILING	NC	NOISE CRITERIA
CLG	COOLING	NC	NORMALLY CLOSED
CO	CLEAN OUT	NIC	NOT IN CONTRACT
COL	COLUMN	NO	NUMBER
COMB	COMBINATION	NO	NORMALLY OPEN
CONC	CONCRETE	NOM	NOMINAL
COND	CONDENSATE	NTS	NOT TO SCALE
CONF	CONFERENCE	O	OXYGEN
CONN	CONNECT	O/A	OUTSIDE AIR
CONST	CONSTRUCTION	OC	ON CENTER
CONT	CONTINUE/CONTINUATION	OF	OVERFLOW
CONTR	CONTRACT/CONTRACTOR	OPNG	OPENING
COORD	COORDINATE	PD	PRESSURE DROP
CTR	CENTER	PIV	POST INDICATOR VALVE
CUFT	CUBIC FEET	PLBG	PLUMBING
CV	CHECK VALVE	PR	PAIR
CW	COLD WATER	PREL	PRELIMINARY
CW	CLOCKWISE	PRESS	PRESSURE
D	DEGREE	PRIM	PRIMARY
DB	DRY BULB	PRV	PRESSURE REDUCING VALVE
DET	DETAIL	PSI	POUNDS PER SQUARE INCH
DIA	DIAMETER	PSIG	POUNDS PER SQUARE INCH GAUGE
DIAG	DIAGONAL	PW	POTABLE WATER
DISCH	DISCHARGE	PWR	POWER
DIV	DIVISION	R	DUCT RISER
DI	DEIONIZED WATER	R/A	RETURN AIR
DMPR	DAMPER	RCP	RADIANT CEILING PANEL
DN	DOWN	RD	ROOF DRAIN
DWG	DRAWING	REC	RECESSED
DW	DISTILLED WATER	RED	REDUCER
EA	EACH	REFR	REFRIGERATION
EAT	ENTERING AIR TEMPERATURE	RH	RELATIVE HUMIDITY
EL	ELBOW	REQD	REQUIRED
ELEC	ELECTRICAL	REV	REVERSE
ELEV	ELEVATION	RL/A	RELIEF AIR
EP	EXPLOSION PROOF	RM	ROOM
EQ	EQUAL	RPM	REVOLUTIONS PER MINUTE
EQUIP	EQUIPMENT	RSD	ROOF SAFETY DRAIN
EWC	ELECTRIC WATER COOLER	RW	RAIN WATER
EWT	ENTERING WATER TEMPERATURE	SF	SQUARE FOOT
E/A	EXHAUST AIR	S/A	SUPPLY AIR
EAH	EXHAUST HOOD	SAN	SANITARY
EXIST	EXISTING	SCHED	SCHEDULE
EXP	EXPANSION	SECT	SECTION
EXPJT	EXPANSION JOINT	SF	SQUARE FOOT
EXT	EXTERIOR	SD	SMOKE DAMPER
F	DEGREES FAHRENHEIT	SHT	SHEET
FCO	FLOOR CLEAN OUT	SIM	SIMILAR
FD	FLOOR DRAIN	SLV	SLEEVE
FD	FIRE DAMPER	SM	SURFACE MOUNT
FDV	FIRE DEPARTMENT VALVE	SP	STANDPIPE
FHC	FIRE HOSE CABINET	SP	STATIC PRESSURE
FL	FLOOR	SPEC	SPECIFICATION
FLEX	FLEXIBLE	SPS	STATIC PRESSURE STATION
FLG	FLANGE	SQ	SQUARE
FO	FUEL OIL	SR	SUCTION REFRIGERANT
FOV	FUEL OIL VENT	SS	STAINLESS STEEL
FOR	FUEL OIL RETURN	STD	STANDARD
FOS	FUEL OIL SUPPLY	STM	STEAM
FPM	FEET PER MINUTE	STRUCT	STRUCTURAL
FRP	FIBERGLASS REINFORCED PIPE	SUCT	SUCTION
FS	FULL SIZE	SUSP	SUSPENDED
FS	FLOOR SINK	T	THERMOSTAT
FT	FOOT/FEET	TCP	TEMPERATURE CONTROL PANEL
FTG	FOOTING	TD	TEMPERATURE DROP
FTR	FIN TUBE RADIATION	TDR	TRENCH DRAIN
FUT	FUTURE	TEFC	TOTALLY ENCLOSED FAN COOLED
GA	GAGE/GAUGE	TEMP	TEMPERATURE
GAL	GALLON	TYP	TYPICAL
GALV	GALVANIZED	UFD	UNDER FLOOR DUCT
GC	GENERAL CONTRACTOR	UG	UNDERGROUND
GEN	GENERATOR	VAC	VACUUM
GENL	GENERAL	V	VENT
GPM	GALLONS PER MINUTE	VAV	VARIABLE AIR VOLUME
GR	GRADE	VEL	VELOCITY
GW	GREASE WASTE	VENT	VENTILATION
HB	HOSE BIB	VERT	VERTICAL
HD	HEAD	VOL	VOLUME
HHWR	HYDRONIC HOT WATER RETURN	VTR	VENT THROUGH ROOF
HHWS	HYDRONIC HOT WATER SUPPLY	W	WASTE
HORZ	HORIZONTAL	WB	WET BULB
HP	HORSE POWER	WCO	WALL CLEAN OUT
HP	HIGH PRESSURE	WH	WALL HYDRANT
HTG	HEATING		
HTR	HEATER		
HW	HOT WATER		

EQUIPMENT ABBREVIATIONS

AC	AIR CONDITIONING UNIT	FP	FIRE PUMP
ACC	AIR COOLED CONDENSER	GI	GREASE INTERCEPTOR
ACCU	AIR COOLING CONDENSING UNIT	GRV	GRAVITY ROOF VENTILATOR
AFMS	AIR FLOW MEASURING STATION	H	HUMIDIFIER
AHU	AIR HANDLING UNIT	HWP	HEATING WATER PUMP
AS	AIR SEPARATOR	HX	HEAT EXCHANGER
B	BOILER	HPU	HEAT PUMP UNIT
CF	CABINET FAN	HRU	HEAT RECOVERY UNIT
CF	CHEMICAL FEEDER	ILC	INLINE CENTRIFUGAL
CFP	CHEMICAL FEEDER PUMP	PF	PROPELLER FAN
CH	CHILLER	PRV	POWER ROOF VENTILATOR
CRU	CONDENSATE RETURN UNIT	PWF	POWER WALL FAN
CT	COOLING TOWER	RE	RETURN/EXHAUST FAN
CUH	CABINET UNIT HEATER	RTU	ROOFTOP UNIT
CWP	CONDENSER WATER PUMP	SA	SHOCK ABSORBER
CHWP	CHILLED WATER PUMP	SAT	SOUND ATTENUATOR
DBP	DOMESTIC WATER BOOSTER PUMP	SEP	SEWAGE EJECTOR PUMP
DC	DUCT MOUNTED COIL	SF	SUPPLY FAN
DCP	DOMESTIC WATER CIRCULATING PUMP	SP	SUMP PUMP
EF	EXHAUST FAN	UH	UNIT HEATER
EDC	ELECTRIC DUCT COIL	US	UTILITY SET
ET	EXPANSION TANK	UV	UNIT VENTILATOR
EWH	ELECTRIC WATER HEATER	WFMS	WATER FLOW MEASURING STATION
FCU	FAN COIL UNIT	WH	WATER HEATER

NOTES

1. COORDINATE EXACT LOCATIONS AND INVERTS FOR ALL OUTSIDE UTILITIES BEFORE STARTING ANY WORK.

2. THESE DRAWINGS SHOW THE GENERAL ARRANGEMENT OF PIPING, EQUIPMENT AND APPURTENANCES. FOLLOW DRAWINGS AS CLOSELY AS ACTUAL BUILDING CONSTRUCTION AND THE WORK OF OTHER TRADES WILL PERMIT. BECAUSE OF THE SMALL SCALE OF THE DRAWINGS, SOME OFFSETS, FITTINGS AND ACCESSORIES WHICH MAY BE REQUIRED HAVE NOT BEEN SHOWN. INVESTIGATE THE MECHANICAL, STRUCTURAL, ARCHITECTURAL AND FINISH CONDITIONS AFFECTING THE WORK AND ARRANGE THE WORK ACCORDINGLY.

3. CONTRACTOR SHALL NOT CUT ANY STRUCTURAL MEMBERS OF BUILDING WITHOUT PRIOR APPROVAL. COORDINATE HANGING OF EQUIPMENT WITH STRUCTURAL DRAWINGS

4. COORDINATE ALL VOLTAGES, PHASES AND CAPACITIES WITH ELECTRICAL PLANS.

5. ALL PIPES PENETRATING FLOORS IN MECHANICAL EQUIPMENT ROOMS SHALL BE PROVIDED WITH PIPE SLEEVES CAST IN PLACE EXTENDING 4 INCHES ABOVE THE FINISHED FLOOR. PIPES INSTALLED AFTER THE FLOOR IS POURED SHALL HAVE CONCRETE CURB 6 INCHES WIDE AND 4 INCHES HIGH PROVIDED. SEAL WATER TIGHT.

6. PROVIDE A UL THROUGH FIRE STOP PENETRATION SYSTEM FOR ALL PIPES THROUGH FIRE WALLS OR FLOORS. REFER TO ARCHITECTURAL PLANS TO VERIFY RATINGS (FIRE/SMOKE, SMOKE).

7. THE FIRE PROTECTION CONTRACTOR SHALL COORDINATE THE LOCATION AND QUANTITY OF ALL TAMPER AND WATER FLOW SWITCHES WITH THE FIRE ALARM CONTRACTOR. THE FIRE ALARM CONTRACTOR IS RESPONSIBLE FOR CONDUIT AND WIRING BETWEEN THE FIRE ALARM CONTROL PANEL/ENCLOSURE AND EACH TAMPER AND WATER FLOW SWITCH. THE FIRE ALARM CONTRACTOR SHALL PROVIDE ADDITIONAL ZONE MODULES REQUIRED AND TERMINATION OF ALL WIRING.

8. COORDINATE LOCATION OF HEADS W/ THE REFLECTED CEILING PLANS. HEADS IN LAY-IN TILE SHALL BE LOCATED WITHIN 2" OF THE CENTER OF THE TILE.

9. PROVIDE DRY SPRINKLER HEADS AND PIPING FOR PROTECTION IN AREAS THAT ARE SUBJECT TO FREEZING.

10. COORDINATE INSTALLATION WITH LOCAL AUTHORITIES AND PROVIDE ADDITIONAL COVERAGE AND EQUIPMENT AS REQUIRED TO MEET SPECIFIC REQUIREMENTS OF STATE AND LOCAL AUTHORITIES HAVING JURISDICTION.

11. PROVIDE SPRINKLER HEADS IN MECHANICAL ROOMS AND ELECTRICAL ROOMS, UNDER EQUIPMENT, DUCT WORK AND OTHER AREAS WHERE OBSTRUCTIONS OCCUR AS DEFINED BY NFPA 13.

12. PROVIDE SEISMIC MOVEMENT CONNECTORS BETWEEN ALL PIPING SUPPORTED BY SEISMICALLY PROTECTED BUILDING STRUCTURE AND PIPING SUPPORTED BY OTHER ELEMENTS. SEE SPECIFICATIONS FOR DESCRIPTION OF CONNECTORS.

13. PROVIDE SEISMIC BRACING PER NFPA 13 & ASCE 7-16.

14. PROVIDE SPRINKLER GUARDS IN AREAS WHERE UPRIGHT HEADS ARE EXPOSED TO PEDESTRIAN ACCESS(I.E. BELOW 7'-0" AFF IN TRAFFIC AREAS).

15. IN AREAS WITH EXPOSED STRUCTURE, ROUTE PIPING IN JOIST SPACE. COORDINATE WITH OTHER TRADES.

16. PAINT ALL EXPOSED SPRINKLER PIPING IN EXPOSED AREAS TO MATCH SURROUNDING FINISHES. PROVIDE ONE COAT OF PRIMER AND TWO COATS OF PAINT. COLOR TO BE APPROVED BY ARCHITECT. PROTECT VALVES & SPRINKLERS FROM PAINT.

17. SEE PROJECT SPECIFICATIONS FOR SCHEDULE OF SPRINKLER TYPE.

18. ALL PIPE HANGERS SHALL HAVE TIE-OFFS SECURING THE BEAM CLAMP TO THE STRUCTURE.

19. PROVIDE WITH RETARD CHAMBER, ELECTRIC AND WATER GONG ALARM BELLS ON WET SPRINKLER RISERS TO THE MAIN BUILDING.

20. PROVIDE TAMPER SWITCH ON YARD MOUNTED PIV. SEE CIVIL PLANS FOR LOCATION.

21. REFER TO THE PROJECT "FIRE SPRINKLER SYSTEM SPECIFICATION SHEET" FOR HAZARD CLASSIFICATION BY AREA AND SPRINKLER DESIGN PARAMETERS.

22. ACCESSORIES FOR EQUIPMENT THAT ARE LISTED ON SCHEDULE DRAWINGS ARE TO BE PROVIDED BY THE CONTRACTOR. THE ACCESSORIES ARE TO BE FURNISHED AND INSTALLED AS A COMPLETED OPERATING SYSTEM.

23. SEE STRUCTURAL PLANS FOR LINTEL REQUIREMENTS FOR PENETRATIONS THROUGH WALLS.

24. COORDINATE WORK WITH THAT OF ALL OTHER TRADES TO ELIMINATE INTERFERENCE'S. EXAMINE IN ADVANCE THE LOCATION OF ELECTRICAL SYSTEMS, DUCTS, PIPING, STRUCTURES, CONDUITS AND OTHER EQUIPMENT AND COMPONENTS TO BE INSTALLED AND PROPERLY COORDINATE THE INSTALLATION OF FIRE PROTECTION TO AVOID INTERFERENCE'S BEFORE FABRICATING AND INSTALLING WORK. DETERMINE ALL DIMENSIONS BY ACTUAL FIELD CONDITIONS, MEASUREMENTS FROM MANUFACTURER'S CERTIFIED PRINTS AND COORDINATION WITH OTHER TRADES AND TO MODIFY, OFFSET OR OTHERWISE ACCOMMODATE ALL EQUIPMENT TO THE STRUCTURE, UTILITIES AND OTHER EQUIPMENT.

25. SLEEVE AND SLEEVE SEALS ARE REQUIRED FOR FIRE PROTECTION PIPING PENETRATIONS THROUGH EXTERIOR CONCRETE WALLS ABOVE GRADE, EXTERIOR CONCRETE WALLS BELOW GRADE, CONCRETE SLABS ON GRADE, CONCRETE SLABS ABOVE GRADE AND INTERIOR PARTITIONS. REFER TO PROJECT SPECIFICATIONS.

26. INSTALL ALL EQUIPMENT PER MANUFACTURER'S INSTRUCTIONS. ALL SERVICE CLEARANCES SHALL BE MAINTAINED. NOTIFY OWNER AND ENGINEER PRIOR TO INSTALLATION IN WRITING OF ANY DEVIATIONS.

27. CONTRACTOR SHALL PROVIDE 1/4-INCH SCALE PROJECT SPECIFIC COORDINATION DRAWINGS. COORDINATION DRAWINGS AND PLANS AND OTHER DETAILS SHALL BE DRAWN TO SCALE, ON WHICH THE FOLLOWING ITEMS ARE SHOWN AND COORDINATED WITH EACH OTHER, USING INPUT FROM INSTALLERS OF THE ITEMS INVOLVED INCLUDING BUT NOT LIMITED TO: MECHANICAL EQUIPMENT, DUCTWORK, INSULATION, ALL PIPING, ELECTRICAL DISCONNECTS, ETC. COORDINATION DRAWINGS SHALL INCLUDE ALL MANUFACTURERS REQUIRED CLEARANCES AS WELL AS CODE REQUIRED CLEARANCES.

28. CONTRACTOR SHALL MAKE ALL NECESSARY TESTS, TRIAL OPERATIONS, ETC. REQUIRED TO PROVE THAT ALL SYSTEMS ARE IN COMPLETE SERVICEABLE CONDITION AND WILL FUNCTION AS INTENDED. ADJUST FLUSH VALVES TO PROVIDE MINIMUM FLOW CAPABLE OF CLEANSING BOWLS. ALL COSTS OF TEST SHALL BE BORNE BY THIS CONTRACTOR, SHOULD TEST REVEAL ANY DEFECTIVE MATERIAL OR WORKMANSHIP, SUCH WORK SHALL BE REPLACED AND TESTS REPEATED. ALL CORRECTIONS SHALL BE MADE USING NEW MATERIALS. CONTRACTOR SHALL TEST PIPING AND PLUMBING SYSTEMS TO THE PRESSURES INDICATED IN SECTION 312 OF THE INTERNATIONAL PLUMBING CODE AND MAINTAIN PRESSURE FOR THE DURATION INDICATED.

29. SEE STRUCTURAL PLANS FOR LOCATIONS OF BUILDING EXPANSION AND SEISMIC JOINTS. PROVIDE A METRAFLEX FIRE LOOP SEISMIC EXPANSION JOINT FOR PIPING THAT CROSSES JOINTS.

ssoe®

S&W

PROFESSIONAL SEALS:

SOUTH CAROLINA CERTIFICATE OF AUTHORIZATION SSOE, INC No. 746

SOUTH CAROLINA PROFESSIONAL ENGINEER 8/6/21 NO. 25453 WESLEY G. BROWN

CONSULTANTS:

SUBMITTAL/REVISION SCHEDULE:

NO.	DATE	DESCRIPTION
	08.06.2021	CONSTRUCTION DOCUMENTS

■ APPROVED FOR CONSTRUCTION
□ NOT APPROVED FOR CONSTRUCTION

CLIENT INFORMATION:

SOUTH CAROLINA EDUCATION LOTTERY

South Carolina Education Lottery®

CLIENT PROJECT #:	20048.00
SCEL PROJECT #:	Y20-N001-CB

PROJECT INFORMATION:

4TH FLOOR UPFIT

1333 MAIN STREET
COLUMBIA, SC 29201

SSOE/SW PROJECT #:	021-00531-00
SSOE/SW MANAGER:	WESLEY BROWN

SSOE | STEVENS & WILKINSON
1501 Main Street, Suite 730
Columbia, SC 29201
T. (803) 765-0320

THIS DRAWING IS THE PROPERTY OF SSOE | STEVENS & WILKINSON. UNAUTHORIZED USE OF ANY KIND, INCLUDING USE ON OTHER PROJECTS, IS PROHIBITED.
© SSOE, INC. 2021

FIRE PROTECTION GENERAL

F0.01

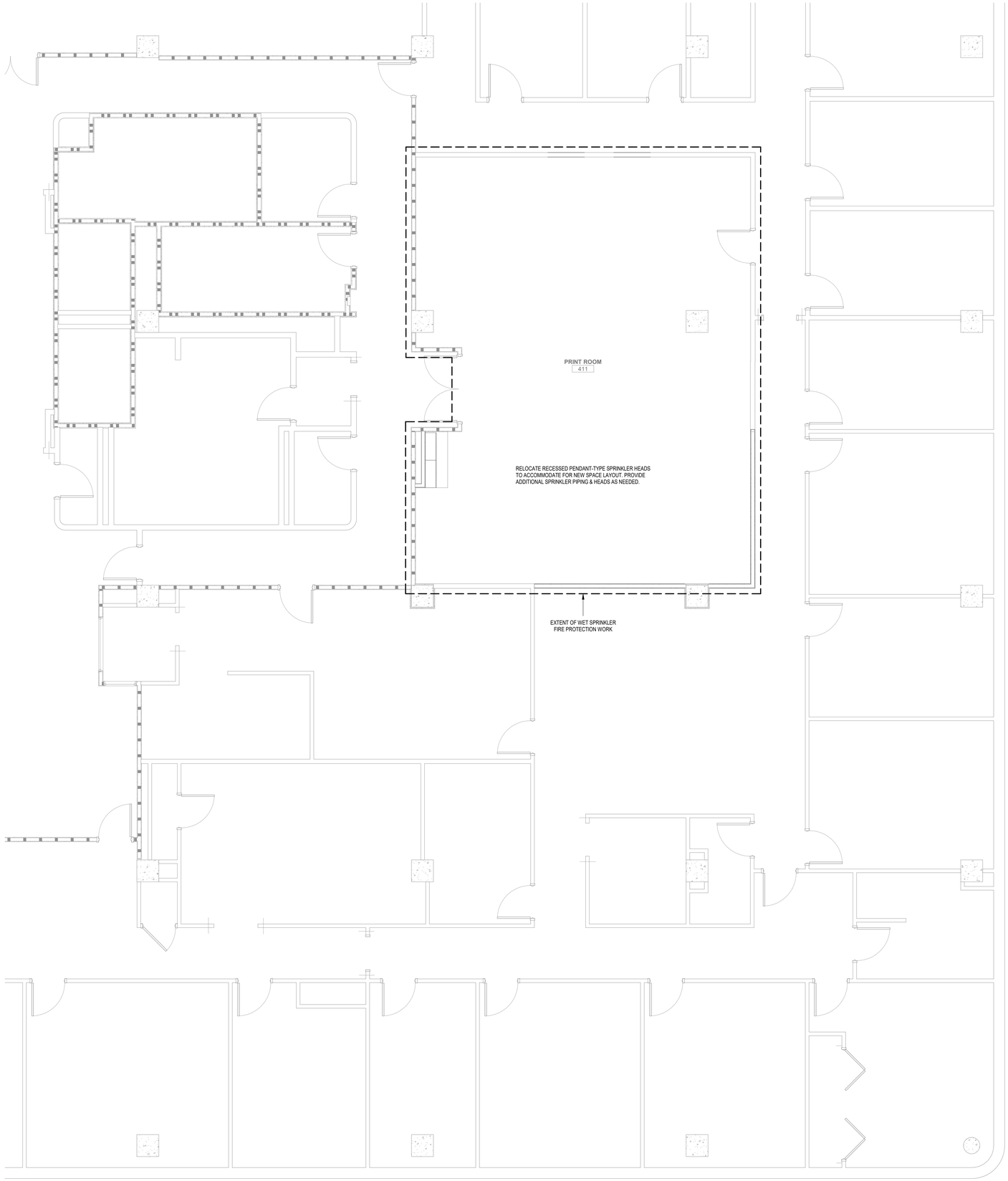

1 LEVEL 4 FIRE PROTECTION PLAN
1/4" = 1'-0"
0 2' 4' 8'

TRUE NORTH
PROJECT NORTH

SSOE
S&W

PROFESSIONAL SEALS:

SOUTH CAROLINA
SSOE, INC
No. 746
CERTIFICATE OF AUTHORIZATION

SOUTH CAROLINA
PROFESSIONAL ENGINEER
NO. 25453
8/6/21
WESLEY G. BROWN

CONSULTANTS:

SUBMITTAL/REVISION SCHEDULE:

NO.	DATE	DESCRIPTION
	08.06.2021	CONSTRUCTION DOCUMENTS

■ APPROVED FOR CONSTRUCTION
□ NOT APPROVED FOR CONSTRUCTION

CLIENT INFORMATION:

SOUTH CAROLINA EDUCATION LOTTERY

South Carolina Education Lottery®

CLIENT PROJECT #:	20048.00
SCEL PROJECT #:	Y20-N001-CB

PROJECT INFORMATION:

4TH FLOOR UPFIT

1333 MAIN STREET
COLUMBIA, SC 29201

SSOE/SW PROJECT #:	021-00531-00
SSOE/SW MANAGER:	WESLEY BROWN

SSOE | STEVENS & WILKINSON
1501 Main Street, Suite 730
Columbia, SC 29201
T. (803) 765-0320

THIS DRAWING IS THE PROPERTY OF SSOE | STEVENS & WILKINSON. UNAUTHORIZED USE OF ANY KIND, INCLUDING USE ON OTHER PROJECTS, IS PROHIBITED.

© SSOE, INC. 2021.

LEVEL 4 FIRE PROTECTION PLAN

F1.41

C:\Autodesk\Revit\2004800 - Mech - SC Education Lottery Upfit - Adjusted Scope - V19.2_cwilkes@ssoe.com.rvt **:FILE PATH**
10/20/2021 3:21:21 PM **:PRINT DATE**

A | B | C | D | E | F | G | H | J

SEISMIC AND WIND REQUIREMENTS FOR PLUMBING SYSTEMS

INFORMATION FOR IBC-2018 /ASCE 7-16

A. EQUIPMENT, APPLIANCES AND SUPPORTS (INCLUDING ROOF CURBS & ROOF RAILS) EXPOSED TO WIND SHALL BE DESIGNED AND INSTALLED TO RESIST THE WIND PRESSURES DETERMINED IN ACCORDANCE WITH THE INTERNATIONAL BUILDING CODE. WHERE SEISMIC RESTRAINT IS REQUIRED, THE MORE DEMANDING FORCE OF WIND AND SEISMIC MUST BE USED. SEE SEISMIC INFORMATION CONTAINED IN THE STRUCTURAL DRAWINGS FOR SITE SPECIFIC INFORMATION ON SEISMIC DESIGN CATEGORY.SEE EQUIPMENT SCHEDULES AND DETAILS FOR SPECIFIC COMPONENT IMPORTANCE FACTOR DESIGNATIONS.
B. USE APPLICABLE TABLE BELOW TO DETERMINE SEISMIC RESTRAINT REQUIREMENTS FOR EACH MECHANICAL COMPONENT.
C. FOR ALL COMPONENTS REQUIRING SEISMIC RESTRAINT, THE COMPONENT SUPPORTS AND ATTACHMENTS SHALL BE DESIGNED BY A REGISTERED DESIGN PROFESSIONAL.
D. WHERE SEISMIC RESTRAINT IS REQUIRED, HOUSEKEEPING PADS NEEDED FOR THE INSTALLATION OF EQUIPMENT UNDER THIS CONTRACT MUST BE DESIGNED BY THE SEISMIC ENGINEER. DO NOT POUR ANY HOUSEKEEPING PADS PRIOR TO THE THE RECEIPT OF THE SEISMIC SUBMITTAL.
E. SEISMIC RESTRAINTS FOR PIPING MUST BE SHOWN ON LAYOUT DRAWINGS SHOWING SPECIFIC RESTRAINT LOCATIONS ALONG WITH ACCOMPANYING DETAILS AND CALCULATIONS.
F. SEISMIC CATEGORY "C".

COMPONENT IMPORTANCE FACTOR (Ip) DESIGNATION

Ip = 1.0	Ip = 1.5
• DOMESTIC WATER PIPING • SANITARY PIPING	

SEISMIC DESIGN CATEGORY C

	COMPONENT IMPORTANCE FACTOR (Ip)	
	1.0	1.5
COMPONENT IDENTIFICATION	SEISMIC RESTRAINT REQUIREMENT	SEISMIC RESTRAINT REQUIREMENT
ROOF MOUNTED	NOT REQUIRED	RESTRAIN ALL
FLOOR MOUNTED	NOT REQUIRED	RESTRAIN ALL
WALL MOUNTED	NOT REQUIRED	RESTRAIN ALL
COMPONENT SUPPORTS	NOT REQUIRED	RESTRAIN ALL
SUSPENDED EQUIPMENT	NOT REQUIRED	RESTRAIN ALL
SUSPENDED DUCTILE PIPING (STEEL, ALUMINUM, COPPER, ETC.)	NOT REQUIRED	>2" (SEE NOTE 3,4)
SUSPENDED NON DUCTILE PIPING (CAST IRON, PLASTIC, CERAMIC)	NOT REQUIRED	RESTRAIN ALL (SEE NOTE 3,4)
SUSPENDED PIPE ON TRAPEZE	NOT REQUIRED	RESTRAIN IF ANY PIPE ON TRAPEZE > 2" RESTRAIN IF TOTAL WEIGHT OF PIPES ON TRAPEZE > 10 LBS/FT (SEE NOTE 3,4)
COMPONENT CERTIFICATION (SEE NOTE 4)	NOT REQUIRED	REQUIRED

NOTES:
1. EQUIPMENT 20 LBS. OR LESS IS EXEMPT IF FLEXIBLE CONNECTIONS ARE PROVIDED BETWEEN THE COMPONENT AND ASSOCIATED PIPING AND CONDUIT.
2. RESTRAINTS ARE NOT REQUIRED IF THE COMPONENT WEIGHTS 400 LBS. OR LESS, IS MOUNTED AT 4 FT. OR LESS ABOVE A FLOOR, AND HAS FLEXIBLE CONNECTIONS BETWEEN THE COMPONENT AND ASSOCIATED PIPING AND CONDUIT.
3. RESTRAINT IS NOT REQUIRED IF THE PIPING IS SUPPORTED BY HANGERS AND EACH HANGER IN THE PIPING RUN IS 12 IN. OR LESS IN LENGTH FROM THE TOP OF THE PIPE TO THE SUPPORTING STRUCTURE. WHERE PIPES ARE SUPPORTED ON A TRAPEZE, THE TRAPEZE SHALL BE SUPPORTED BY HANGERS HAVING A LENGTH OF 12 IN. OR LESS. WHERE ROD HANGERS ARE USED, THEY SHALL BE EQUIPPED WITH SWIVELS, EYE NUTS OR OTHER DEVICES TO PREVENT BENDING IN THE ROD.
4. COMPONENT CERTIFICATION MUST BE SUPPLIED BY THE EQUIPMENT MANUFACTURER AT TIME OF SUBMITTAL FOR REVIEW BY ENGINEER OF RECORD.

DEMOLITION NOTES

1. THESE DRAWINGS ARE BASED ON EXISTING PLANS. REFER TO ARCHITECTURAL DRAWINGS FOR EXACT LOCATION OF DEMOLITION AREAS. THE CONTRACTOR SHALL THOROUGHLY INVESTIGATE THE EXISTING CONDITIONS PRIOR TO BID.

2. THE PURPOSE AND INTENT OF DEMOLITION SHEET IS TO SHOW THE CONTRACTOR ITEMS REQUIRED TO BE REMOVED, BUT IS IN NO WAY LIMITED TO THE ITEMS SHOWN. ALL BIDDERS ARE REQUIRED TO MAKE AN ON-SITE VISIT AND INSPECT EXISTING MECHANICAL CONDITIONS BEFORE FINAL BID DATE.

3. ON-SITE INSPECTIONS ARE REQUIRED TO OCCUR PRIOR TO FINAL BID DATE TO DETERMINE ALL EXISTING CONDITIONS AND COORDINATE POWER DOWN TIMES. BIDDING CONTRACTORS ARE REQUIRED TO SURVEY ALL AREAS OF THE BUILDING PRIOR TO BIDDING TO VIEW THE EXISTING CONDITIONS. ANY ADDITIONAL WORK REQUIRED OR CLARIFICATIONS TO THE WORK SHOWN THAT COULD HAVE BEEN REASONABLY VERIFIED BY THE SURVEY SHALL BE THE RESPONSIBILITY OF THE CONTRACTOR.

4. PERFORM ALL CUTTING AND DRILLING REQUIRED. PATCH ALL HOLES, PAINT AND OTHERWISE REPAIR ALL DAMAGES TO THE BUILDING STRUCTURE AND SURFACES WHICH OCCUR AS A RESULT OF THIS PROJECT. REPAIRS SHALL RESTORE THE STRUCTURE TO THE SAME CONDITION EXISTING PRIOR TO BEGINNING WORK.

5. ANY DAMAGE TO EXISTING CONDITIONS CAUSED BY DEMOLITION AND/OR NEW WORK SHALL BE REPAIRED BY THE CONTRACTOR RESPONSIBLE FOR THE DAMAGE.

6. ANY NEW OR EXISTING PIPING PASSING THROUGH A NEW OR EXISTING WALL CARRYING A FIRE RATING SHALL BE SEALED TIGHT TO THE WALL WITH A UL APPROVED METHOD.

7. ALL DEMOLITION SHALL BE PERFORMED TO PREVENT THE ARBITRARY DESTRUCTION OR INTERRUPTION OF CONCEALED UTILITIES WHICH ARE INTENDED TO REMAIN IN USE AND THE ROUTING OF WHICH CAN NOT BE PREDETERMINED UNTIL DEMOLITION IS STARTED. ALL SUCH DISCOVERIES OF UTILITIES WHICH ARE IN A DIFFERENT LOCATION FROM THAT INDICATED, CHANGE DIRECTION FROM FLOOR-TO-FLOOR, ETC. OR ARE UNIDENTIFIED, SHALL BE REPORTED TO THE ARCHITECT BEFORE REMOVAL OR DISTURBANCE.

8. REMOVE, STORE, CLEAN, REINSTALL, RECONNECT, AND MAKE OPERATIONAL EQUIPMENT INDICATED FOR RELOCATION.

9. CONTRACTOR IS RESPONSIBLE FOR MAINTAINING BUILDING SERVICES DURING DEMOLITION INCLUDING ALL TESTING, SERVICE FEES, RENTAL OF TEMPORARY EQUIPMENT OR INSTALLATION AND CONNECTION OF TEMPORARY SERVICES.

10. WHERE WALLS, FLOORS OR CEILINGS ARE CUT, REMOVED OR DAMAGED FOR INVESTIGATING EXISTING CONDITIONS, DEMOLISHING SERVICES, INSTALLING NEW SERVICES, ETC. THE CONTRACTORS SHALL COORDINATE THE PATCHING OF THE WALLS, FLOORS & CEILINGS TO MATCH EXISTING WITH THE BUILDING FINISHES CONTRACTOR AND/OR GENERAL CONTRACTOR.

11. NEW WORK SHOWN IS SUGGESTED ROUTING. CONTRACTOR SHALL FIELD INVESTIGATE EXISTING SERVICES AVAILABLE. BASED ON THE CONTRACTORS DISCOVERIES, THEY MAY SUGGEST ALTERNATE ROUTINGS. THE ENGINEER OF RECORD SHALL MAKE THE FINAL DETERMINATION ON WHETHER THE SERVICES SHALL BE INSTALLED AS SHOWN OR AS SUGGESTED BY THE CONTRACTOR.

12. WHERE PIPE, INSULATION, OR EQUIPMENT TO REMAIN IS DAMAGED OR DISTURBED, REMOVE DAMAGED PORTIONS AND INSTALL NEW PRODUCTS OF EQUAL CAPACITY AND QUALITY.

SYMBOLS

Symbol	Description
2"	PIPE SIZE TAG (DIAMETER)
	ABOVE GROUND PIPING
1/8" / 12" SLOPE	PIPE SLOPE TAG
	BELOW GROUND PIPING
INVERT: -10' - 1"	PIPE INVERT ELEVATION TAG
2" (E)	EXISTING PIPE TAG
	PIPING BEING DEMOLISHED
NG	NATURAL GAS
PG	PROPANE GAS
CWV	COMBINATION WASTE & VENT
CA	COMPRESSED AIR
CW	DOMESTIC COLD WATER
H-CW	HARD COLD WATER
S-CW	SOFT COLD WATER
F-CW	FILTERED COLD WATER
RO	REVERSE OSMOSIS WATER
HWS	HOT WATER
HW 140°	HOT WATER 140°
HWR	HOT WATER RECIRCULATION
HW-R 140°	HOT WATER RECIRCULATION 140°
GV	GREASE VENT
GW	GREASE WASTE
IW	INDIRECT WASTE
OV	OIL VENT
OW	OIL WASTE
PD	PUMP DISCHARGE
V	SANITARY VENT
SS	SANITARY SEWER
RD	STORM DRAINAGE
RSD	OVERFLOW STORM DRAINAGE

PIPE DROP
PIPE RISE
PIPE TEE
CAP

4" 4" 2" 4"
PLUG
REDUCING 45 DEGREE TEE
45 DEGREE TEE

DOMESTIC WATER METER
FLOW MEASURING AND BALANCING DEVICE
BALL VALVE
CHECK VALVE
THREE WAY VALVE
MOTORIZED CONTROL VALVE
THREE WAY MOTORIZED CONTROL VALVE
PRESSURE REDUCING VALVE
SOLENOID VALVE
BUTTERFLY VALVE

6" FD-1
FLOOR DRAIN FIXTURE
DRAIN SIZE
DRAIN TAG
TYPE (SEE SCHEDULE)
X" V UP THRU FLOOR

6" RSD — 6" RD
ROOF DRAIN FIXTURE
DRAIN SIZE
DRAIN TAG
TYPE (SEE SCHEDULE)

HB-1
PLUMBING FIXTURE
PLUMBING FIXTURE TAG
TYPE (SEE SCHEDULE)

ABBREVIATIONS

&	AND
Ø	ROUND
A	AIR
AB	ABOVE BASE
ABV	ABOVE
AC	AIR CONDITIONING
ACOUS	ACOUSTICAL
AD	AREA DRAIN
ADD	ADDENDUM
ADDL	ADDITIONAL
AFF	ABOVE FINISHED FLOOR
AFUE	ANNUAL FUEL UTILIZATION EFFICIENCY
AG	ABOVE GROUND
ALT	ALTERNATE
ALUM	ALUMINUM
AP	ACCESS PANEL
APPROX	APPROXIMATE
ARCH	ARCHITECT/ARCHITECTURAL
AV	ACID RESISTANT VENT
AW	ACID RESISTANT WASTE
AUTO	AUTOMATIC
BFF	BELOW FINISHED FLOOR
BLDG	BUILDING
BLW	BELOW
BM	BEAM
BO	BY OTHER
BOT	BOTTOM
BSMT	BASEMENT
BTU	BRITISH THERMAL UNITS
BTUH	BRITISH THERMAL UNITS PER HOUR
BTWN	BETWEEN
CAP	CAPACITY
CB	CATCH BASIN
CCW	COUNTER CLOCKWISE
CFCV	CONSTANT FLOW CONTROL VALVE
CFM	CUBIC FEET PER MINUTE
CHW	CIRCULATING HOT WATER
CI	CAST IRON
CLG	CEILING
CLG	COOLING
CO	CLEAN OUT
COL	COLUMN
COMB	COMBINATION
CONC	CONCRETE
COND	CONDENSATE
CONF	CONFERENCE
CONN	CONNECT
CONST	CONSTRUCTION
CONT	CONTINUE/CONTINUATION
CONTR	CONTRACT/CONTRACTOR
COORD	COORDINATE
CTR	CENTER
CUFT	CUBIC FEET
CV	CHECK VALVE
CW	COLD WATER
CW	CLOCKWISE
D	DEGREE
DB	DRY BULB
DET	DETAIL
DIA	DIAMETER
DIAG	DIAGONAL
DISCH	DISCHARGE
DIV	DIVISION
DI	DEIONIZED WATER
DMPR	DAMPER
DN	DOWN
DWG	DRAWING
DW	DISTILLED WATER
EA	EACH
EAT	ENTERING AIR TEMPERATURE
EL	ELBOW
ELEC	ELECTRICAL
ELEV	ELEVATION
EP	EXPLOSION PROOF
EQ	EQUAL
EQUIP	EQUIPMENT
EWC	ELECTRIC WATER COOLER
EWT	ENTERING WATER TEMPERATURE
E/A	EXHAUST AIR
EAH	EXHAUST HOOD
EXIST	EXISTING
EXP	EXPANSION
EXPJT	EXPANSION JOINT
EXT	EXTERIOR
F	DEGREES FAHRENHEIT
FCO	FLOOR CLEAN OUT
FD	FLOOR DRAIN
FD	FIRE DAMPER
FDV	FIRE DEPARTMENT VALVE
FHC	FIRE HOSE CABINET
FL	FLOOR
FLEX	FLEXIBLE
FLG	FLANGE
FO	FUEL OIL
FOV	FUEL OIL VENT
FOR	FUEL OIL RETURN
FOS	FUEL OIL SUPPLY
FPM	FEET PER MINUTE
FRP	FIBERGLASS REINFORCED PIPE
FS	FULL SIZE
FS	FLOOR SINK
FT	FOOT/FEET
FTG	FOOTING
FTR	FIN TUBE RADIATION
FUT	FUTURE
GA	GAGE/GAUGE
GAL	GALLON
GALV	GALVANIZED
GC	GENERAL CONTRACTOR
GEN	GENERATOR
GENL	GENERAL
GPM	GALLONS PER MINUTE
GR	GRADE
GW	GREASE WASTE
HB	HOSE BIB
HD	HEAD
HHWR	HYDRONIC HOT WATER RETURN
HHWS	HYDRONIC HOT WATER SUPPLY
HORZ	HORIZONTAL
HP	HORSE POWER
HP	HIGH PRESSURE
HTG	HEATING
HTR	HEATER
HW	HOT WATER
HYD	HYDRANT
ID	INDIRECT
IN	INCH
INL	INLET
INSUL	INSULATION
INT	INTERIOR
INV	INVERT
INWG	INCHES WATER GAUGE
JT	JOINT
LAB	LABORATORY
LB	POUND
LB/HR	POUNDS PER HOUR
LAT	LEAVING AIR TEMPERATURE
LF	LINEAL FOOT
LOC	LOCATION
LP	LOW PRESSURE
LPG	LIQUEFIED PETROLEUM GAS
LR	LIQUID REFRIGERANT
LVR	LOUVER
LWT	LEAVING WATER TEMPERATURE
M/A	MIXED AIR
MAN	MANUAL
MATL	MATERIAL
MAV	MANUAL AIR VENT
MAX	MAXIMUM
MBD	MOTORIZED BYPASS DAMPER
MBH	ONE THOUSAND BTU PER HOUR
MCF	ONE THOUSAND CUBIC FEET
MCW	MAKE-UP COLD WATER
MD	MOTORIZED DAMPER
MECH	MECHANICAL
MFR	MANUFACTURER
MH	MANHOLE
MIN	MINIMUM
MISC	MISCELLANEOUS
MTR	MOTOR
MU/A	MAKE-UP/AIR
N	NECK
NC	NOISE CRITERIA
NC	NORMALLY CLOSED
NIC	NOT IN CONTRACT
NO	NUMBER
NO	NORMALLY OPEN
NOM	NOMINAL
NTS	NOT TO SCALE
O	OXYGEN
O/A	OUTSIDE AIR
OC	ON CENTER
OF	OVERFLOW
OPNG	OPENING
PD	PRESSURE DROP
PIV	POST INDICATOR VALVE
PLBG	PLUMBING
PR	PAIR
PREL	PRELIMINARY
PRESS	PRESSURE
PRIM	PRIMARY
PRV	PRESSURE REDUCING VALVE
PSI	POUNDS PER SQUARE INCH
PSIG	POUNDS PER SQUARE INCH GAUGE
PW	POTABLE WATER
PWR	POWER
R	DUCT RISER
R/A	RETURN AIR
RCP	RADIANT CEILING PANEL
RD	ROOF DRAIN
REC	RECESSED
RED	REDUCER
REFR	REFRIGERATION
RH	RELATIVE HUMIDITY
REQD	REQUIRED
REV	REVERSE
RL/A	RELIEF AIR
RM	ROOM
RPM	REVOLUTIONS PER MINUTE
RSD	ROOF SAFETY DRAIN
RW	RAIN WATER
SF	SQUARE FOOT
S/A	SUPPLY AIR
SAN	SANITARY
SCHED	SCHEDULE
SECT	SECTION
SF	SQUARE FOOT
SD	SMOKE DAMPER
SHT	SHEET
SIM	SIMILAR
SLV	SLEEVE
SM	SURFACE MOUNT
SP	STANDPIPE
SP	STATIC PRESSURE
SPEC	SPECIFICATION
SPS	STATIC PRESSURE STATION
SQ	SQUARE
SR	SUCTION REFRIGERANT
SS	STAINLESS STEEL
STD	STANDARD
STM	STEAM
STRUCT	STRUCTURAL
SUCT	SUCTION
SUSP	SUSPENDED
T	THERMOSTAT
TCP	TEMPERATURE CONTROL PANEL
TD	TEMPERATURE DROP
TDR	TRENCH DRAIN
TEFC	TOTALLY ENCLOSED FAN COOLED
TEMP	TEMPERATURE
TYP	TYPICAL
UFD	UNDER FLOOR DUCT
UG	UNDERGROUND
VAC	VACUUM
V	VENT
VAV	VARIABLE AIR VOLUME
VEL	VELOCITY
VENT	VENTILATION
VERT	VERTICAL
VOL	VOLUME
VTR	VENT THROUGH ROOF
W	WASTE
WB	WET BULB
WCO	WALL CLEAN OUT
WH	WALL HYDRANT

EQUIPMENT ABBREVIATIONS

AC	AIR CONDITIONING UNIT
ACC	AIR COOLED CONDENSER
ACCU	AIR COOLING CONDENSING UNIT
AFMS	AIR FLOW MEASURING STATION
AHU	AIR HANDLING UNIT
AS	AIR SEPARATOR
B	BOILER
CF	CABINET FAN
CF	CHEMICAL FEEDER
CFP	CHEMICAL FEEDER PUMP
CH	CHILLER
CRU	CONDENSATE RETURN UNIT
CT	COOLING TOWER
CUH	CABINET UNIT HEATER
CWP	CONDENSER WATER PUMP
CHWP	CHILLED WATER PUMP
DBP	DOMESTIC WATER BOOSTER PUMP
DC	DUCT MOUNTED COIL
DCP	DOMESTIC WATER CIRCULATING PUMP
EF	EXHAUST FAN
EDC	ELECTRIC DUCT COIL
ET	EXPANSION TANK
EWH	ELECTRIC WATER HEATER
FCU	FAN COIL UNIT
FP	FIRE PUMP
GI	GREASE INTERCEPTOR
GRV	GRAVITY ROOF VENTILATOR
H	HUMIDIFIER
HWP	HEATING WATER PUMP
HX	HEAT EXCHANGER
HPU	HEAT PUMP UNIT
HRU	HEAT RECOVERY UNIT
ILC	INLINE CENTRIFUGAL
PF	PROPELLER FAN
PRV	POWER ROOF VENTILATOR
PWF	POWER WALL FAN
RE	RETURN/EXHAUST FAN
RTU	ROOFTOP UNIT
SA	SHOCK ABSORBER
SAT	SOUND ATTENUATOR
SEP	SEWAGE EJECTOR PUMP
SF	SUPPLY FAN
SP	SUMP PUMP
UH	UNIT HEATER
US	UTILITY SET
UV	UNIT VENTILATOR
WFMS	WATER FLOW MEASURING STATION
WH	WATER HEATER

NOTES

1. THESE OUTLINE SPECIFICATIONS AND ACCOMPANYING DRAWINGS DESCRIBE SCOPE OF WORK REQUIRED FOR PLUMBING SYSTEMS, LABOR, MATERIAL EQUIPMENT, MACHINERY, SUPERVISION, MANAGEMENT AND ALL OTHER ITEMS NECESSARY TO BE PROVIDED AS REQUIRED FOR A COMPLETE INSTALLATION OF ALL SYSTEMS SHOWN ON DRAWINGS AND/OR AS SPECIFIED HEREIN.

2. ALL WORK SHALL BE PERFORMED IN STRICT ACCORDANCE WITH THE LATEST EDITION OF THE INTERNATIONAL PLUMBING CODE AND BUILDING CODE, NFPA CODES, AND APPLICABLE STATE AND LOCAL CODES AND ORDINANCES. CONTRACTOR SHALL OBTAIN ALL PERMITS REQUIRED, GIVE ALL LEGAL NOTES, AND HAVE ALL WORK INSPECTED AS REQUIRED BY LOCAL OR STATE LAW.

3. DRAWINGS SHOULD BE INTERPRETED AS GENERAL LAYOUT AND ARRANGEMENT DRAWINGS. THE DRAWINGS ARE NOT INTENDED TO SHOW AND CANNOT SHOW COMPLETE OR PRECISE MEASUREMENTS AND DETAILS OF THE BUILDING AND INSTALLATION IN EVERY RESPECT, AND THEY DO NOT INCLUDE ALL DETAILS OF MANUFACTURED EQUIPMENT, CONSTRUCTION, PIPING, DUCT WORK, ETC. MEASUREMENT FIGURES WRITTEN UPON THE DRAWING SHALL BE RELIED UPON AS A DIMENSION FOR INSTALLATION PURPOSES, EXACT LOCATIONS AND MEASUREMENTS ARE TO BE DEFINED IN THE FIELD AND THE CONTRACTOR SHALL BE RESPONSIBLE FOR THEIR ACCURACY AND USE IN CONSTRUCTION OF THE WORK. COORDINATE CLOSELY WITH OWNER.

4. CONTRACTOR SHALL REFER TO THE ARCHITECTURAL DRAWINGS FOR DIMENSIONS LOCATING PLUMBING FIXTURES.

5. ALL FIXTURES, EQUIPMENT, ETC. SHALL BE INSTALLED IN STRICT ACCORDANCE WITH MANUFACTURE'S WRITTEN INSTRUCTIONS. INSTALL EQUIPMENT LEVEL AND PLUMB, PARALLEL AND PERPENDICULAR TO OTHER BUILDING SYSTEMS AND COMPONENTS IN EXPOSED INTERIOR SPACES, EXCEPT WHERE OTHERWISE INDICATED.

6. INSTALL EXPOSED PIPING FREE OF SAGS AND BENDS. PROVIDE BRACKET STANDOFFS FROM MOUNTING SURFACES SUFFICIENT TO ALLOW 1" CLEANING SPACE AROUND ALL PIPING, INCLUDING INSULATION.

7. MAKE PROPER WASTE, VENT, HOT AND COLD WATER CONNECTIONS TO ALL FIXTURES AND EQUIPMENT, EVEN THOUGH ALL BRANCHES, ELBOWS AND CONNECTIONS ARE NOT SHOWN.

8. VALVES SHALL BE PROVIDED FOR EQUIPMENT ISOLATION. PROVIDE BRAIDED STAINLESS STEEL HOSE BETWEEN VALVE AND EQUIPMENT IN ACCORDANCE WITH MANUFACTURER'S SPECIFICATIONS. LOCATE SHUT-OFF VALVE FOR EASY ACCESS SUCH THAT VALVES CAN BE REACHED WITHOUT MOVING EQUIPMENT. LOCATE UNIONS AND FLANGES TO FACILITATE EQUIPMENT INSTALLATION AND MAINTENANCE.

9. UNIONS SHALL BE PROVIDED ADJACENT TO EACH VALVE AND AT FINAL CONNECTION TO EACH PIECE OF EQUIPMENT. INSTALL DIELECTRIC COUPLINGS FOR CONNECTION OF DISSIMILAR MATERIALS. SCREW JOINT STEEL PIPING UP TO AND INCLUDING 1-1/2". WELD PIPING USING LEADFREE SOLDER FOR SOLDERING DOMESTIC WATER PIPING.

10. CONCEALED BRACKETS, HANGERS AND PLATES SHALL HAVE PRIMER COAT OF PAINT. EXPOSED PIPING AND TRIM SHALL BE HEAVY BRASS, CHROME PLATED AND FULLY PROTECTED DURING INSTALLATION. STRAP OR PADDED WRENCHES SHALL BE USED ON CHROME PLATED PIPING, FITTINGS AND VALVES.

11. CONTRACTOR SHALL REMOVE ALL DEBRIS DUE TO THIS WORK TO PROPER DISPOSAL AREAS AND SHALL CLEAN ALL EQUIPMENT AND AREAS AFFECTED BY HIS WORK AT THE END OF EACH SHIFT EACH DAY. DISPOSAL OF ALL MATERIALS SHALL BE AS DIRECTED BY THE OWNER.

12. REMOVE PIPING AND EQUIPMENT AS DELINEATED BY DRAWINGS, SPECS., DETAILS, ETC. THE DEBRIS AND ALL OTHER EQUIPMENT SHALL BE REMOVED FROM PREMISES.

13. WHERE PIPE PENETRATIONS OCCUR THAT ARE VISIBLE, INSTALL CHROME ESCUTCHEON TO COVER SLEEVE AND/OR CAULKING. MAINTAIN FLOOR AND WALL FIRE RATING INTEGRITY.

14. THE CONTRACTOR SHALL COORDINATE HIS WORK WITH THAT OF ALL OTHER TRADES TO ELIMINATE INTERFERENCE'S. THE CONTRACTOR SHALL EXAMINE IN ADVANCE THE LOCATION OF ELECTRICAL SYSTEMS, DUCTS, PIPING, STRUCTURES, CONDUITS AND OTHER EQUIPMENT AND COMPONENTS TO BE INSTALLED AND PROPERLY COORDINATE THE INSTALLATION OF MECHANICAL WORK TO AVOID INTERFERENCE'S BEFORE FABRICATING AND INSTALLING WORK. THE ENGINEERS HAVE CONSIDERED EXISTING INTERFERENCE'S IN MAKING THE DRAWINGS. BUT IT IS THE RESPONSIBILITY OF THE CONTRACTOR TO DETERMINE ALL DIMENSIONS BY ACTUAL FIELD CONDITIONS, MEASUREMENTS FROM MANUFACTURER'S CERTIFIED PRINTS AND COORDINATION WITH OTHER TRADES AND TO MODIFY, OFFSET OR OTHERWISE ACCOMMODATE ALL EQUIPMENT TO THE STRUCTURE, UTILITIES AND OTHER EQUIPMENT.

15. CONTRACTOR SHALL SUBMIT FOUR (4) COPIES OF SUBMITTAL DATA FOR PLUMBING EQUIPMENT AND MATERIALS INCLUDING FIXTURES, TRIM, PIPING, ETC. FOR APPROVAL. CLEARLY IDENTIFY ALL ITEMS. ALL FIXTURES SHALL BE FURNISHED COMPLETE WITH TRIM INCLUDING INDIVIDUAL CUT -OFF STOPS ON SUPPLY LINES.

16. THE CONTRACTOR SHALL MAINTAIN AN ACCURATE SET OF RECORD DRAWINGS ON-SITE AT ALL TIMES DURING CONSTRUCTION WHICH SHALL BE AVAILABLE FOR EXAMINATION BY THE OWNER'S REPRESENTATIVE UPON REQUEST. PROVIDE THE OWNER WITH COMPLETE MARKED- UP SET OF THE CONTRACT DRAWINGS AT PROJECT COMPLETION.

17. FLOOR DRAINS SHALL BE PROVIDED WITH TRAP GUARD.

18. COORDINATE VOLTAGE AND PHASE OF ALL PLUMBING EQUIPMENT WITH ELECTRICAL CONTRACTOR BEFORE SUBMITTING SHOP DRAWINGS OR ORDERING EQUIPMENT.

19. PROVIDE CLEAN OUTS AS REQUIRED AT EACH CHANGE OF DIRECTION OF DRAIN PIPING.

20. COORDINATE EXACT LOCATIONS AND INVERTS FOR ALL OUTSIDE UTILITIES BEFORE STARTING ANY WORK.

21. PROVIDE A UL THROUGH FIRE STOP PENETRATION SYSTEM FOR ALL PIPES THROUGH FIRE WALLS OR FLOORS.

22. IF EQUIPMENT TO BE SUPPLIED BY CONTRACTOR IS DIFFERENT THAN THAT SPECIFIED IN PLANS OR SPECIFICATION, THE CONTRACTOR SHALL BE RESPONSIBLE FOR COORDINATING WITH ALL DISCIPLINES ANY CHANGES NEEDED BECAUSE OF SIZE, WEIGHT, LOCATION, ELECTRICAL SERVICE, ETC.

23. COORDINATE LOCATION & PROVIDE ALL ACCESS DOORS OR PANELS FOR VALVES, OR ANY OTHER EQUIPMENT REQUIRING SERVICE ACCESS.

24. ALL ELECTRICAL DISCONNECT SWITCHES FOR PLUMBING EQUIPMENT SHALL BE PROVIDED BY THE PLUMBING CONTRACTOR. THIS INFORMATION SHALL BE INDICATED ON SHOP DRAWINGS.

25. ALL CAST IRON SOIL PIPE AND FITTINGS SHALL BE MARKED WITH THE COLLECTIVE TRADEMARK OF THE CAST IRON SOIL PIPE INSTITUTE (CISPI) AND BE LISTED BY NSF INTERNATIONAL.

26. CONTRACTOR SHALL INSTALL A FIRESTOP DEVICE WHERE ANY NON METALLIC PIPE PENETRATES A FIRE RATED WALL OR FLOOR.

27. CONTRACTOR SHALL MAKE ALL NECESSARY TESTS, TRIAL OPERATIONS, ETC. REQUIRED TO PROVE THAT ALL SYSTEMS ARE IN COMPLETE SERVICEABLE CONDITION AND WILL FUNCTION AS INTENDED. ADJUST FLUSH VALVES TO PROVIDE MINIMUM FLOW CAPABLE OF CLEANSING BOWLS. ALL COSTS OF TEST SHALL BE BORNE BY THIS CONTRACTOR. SHOULD TEST REVEAL ANY DEFECTIVE MATERIAL OR WORKMANSHIP, SUCH WORK SHALL BE REPLACED AND TESTS REPEATED. ALL CORRECTIONS SHALL BE MADE USING NEW MATERIALS. CONTRACTOR SHALL TEST PIPING AND PLUMBING SYSTEMS TO THE PRESSURES INDICATED IN SECTION 312 OF THE INTERNATIONAL PLUMBING CODE AND MAINTAIN PRESSURE FOR THE DURATION INDICATED.

28. AFTER ALL FIXTURES, EQUIPMENT, ETC. HAVE BEEN INSTALLED, THE ENTIRE SYSTEM SHALL BE THOROUGHLY CLEANED. ALL PIPE FITTINGS, EQUIPMENT, ETC. SHALL BE CLEANED OF PIPE JOINT COMPOUND, GREASE, METAL SHAVING, ETC., WHICH HAVE ACCUMULATED THEREON. ALL DAMAGE OR DISCOLORATION OF FIXTURES OR BUILDING DUE TO FAILURE TO CLEAN UP THOROUGHLY OR FLUSH OUT PIPING PROPERLY SHALL BE CORRECTED WITHOUT ADDITIONAL COST TO THE OWNER.

29. ALL DOMESTIC WATER LINES SHALL BE DISINFECTED IN ACCORDANCE WITH SECTION 610 OF THE INTERNATIONAL PLUMBING CODE, "DISINFECTION OF POTABLE WATER SYSTEM."

30. CONTRACTOR IS RESPONSIBLE FOR ANY CUTTING AND PATCHING REQUIRED WHICH IS INCIDENTAL TO THE INSTALLATION OF HIS WORK. CUT, CHANNEL, CHASE AND DRILL FLOORS, WALLS, PARTITIONS, CEILINGS, AND OTHER SURFACES NECESSARY FOR PIPING INSTALLATIONS. PERFORM CUTTING BY SKILLED MECHANICS OF THE TRADES INVOLVED. REPAIR CUT SURFACES USING MATERIALS MATCHING SPECIFIED MATERIALS AND METHODS REQUIRED FOR SURFACE.

31. THE PLUMBING CONTRACTOR SHALL UNCONDITIONALLY WARRANT ALL WORK TO BE FREE OF DEFECTS IN MATERIAL AND WORKMANSHIP FOR A PERIOD OF ONE (1) YEAR FROM THE DATE OF FINAL ACCEPTANCE BY THE LICENSEE AND WILL REPAIR OR REPLACE ANY DEFECTIVE WORK PROMPTLY AND WITHOUT CHARGE AND RESTORE ANY OTHER EXISTING WORK DAMAGED IN THE COURSE OF REPAIRING DEFECTIVE MATERIALS AND WORKMANSHIP.

32. ALL MODEL NUMBERS ARE GENERAL SERIES DESIGNATIONS AND SHOULD NOT BE USED FOR THE PURCHASE OF ANY EQUIPMENT. SCHEDULED CAPACITIES AND EQUIPMENT SPECIFICATIONS SHALL BE THE BASIS FOR THE PURCHASE OF ALL EQUIPMENT.

33. ACCESSORIES FOR EQUIPMENT THAT ARE LISTED ON SCHEDULE DRAWINGS ARE TO BE PROVIDED BY THE CONTRACTOR. THE ACCESSORIES ARE TO BE FURNISHED AND INSTALLED AS A COMPLETED OPERATING SYSTEM.

34. ALL SANITARY SEWER DRAIN LINES UNDER THE SLABS SHALL BE CHECKED BY CAMERA, RECORDED ON DVD, AND MUST BE REVIEWED BY THE PLUMBING ENGINEER AND OWNER, AFTER THE SLABS HAVE BEEN POURED, AND PRIOR TO THE CONSTRUCTION OF ANY WALLS. A DVD OF ALL THESE LINES MUST ALSO BE TURNED IN AT THE END OF THE PROJECT WITH THE PLUMBING CONTRACTOR'S CLOSEOUT DOCUMENTS.

35. SEE STRUCTURAL PLANS FOR LINTEL REQUIREMENTS FOR PENETRATIONS THROUGH WALLS.

36. COORDINATE WORK WITH THAT OF ALL OTHER TRADES TO ELIMINATE INTERFERENCE'S. EXAMINE IN ADVANCE THE LOCATION OF ELECTRICAL SYSTEMS, DUCTS, PIPING, STRUCTURES, CONDUITS AND OTHER EQUIPMENT AND COMPONENTS TO BE INSTALLED AND PROPERLY COORDINATE THE INSTALLATION OF PLUMBING WORK TO AVOID INTERFERENCE'S BEFORE FABRICATING AND INSTALLING WORK. DETERMINE ALL DIMENSIONS BY ACTUAL FIELD CONDITIONS, MEASUREMENTS FROM MANUFACTURER'S CERTIFIED PRINTS AND COORDINATION WITH OTHER TRADES AND TO MODIFY, OFFSET OR OTHERWISE ACCOMMODATE ALL EQUIPMENT TO THE STRUCTURE, UTILITIES AND OTHER EQUIPMENT.

37. SLEEVE AND SLEEVE SEALS ARE REQUIRED FOR PLUMBING PIPING PENETRATIONS THROUGH EXTERIOR CONCRETE WALLS ABOVE GRADE, EXTERIOR CONCRETE WALLS BELOW GRADE, CONCRETE SLABS ON GRADE, CONCRETE SLABS ABOVE GRADE AND INTERIOR PARTITIONS. REFER TO PROJECT SPECIFICATIONS.

38. INSTALL ALL EQUIPMENT PER MANUFACTURER'S INSTRUCTIONS. ALL SERVICE CLEARANCES SHALL BE MAINTAINED. NOTIFY OWNER AND ENGINEER PRIOR TO INSTALLATION IN WRITING OF ANY DEVIATIONS.

39. CONTRACTOR SHALL PROVIDE 1/4-INCH SCALE PROJECT SPECIFIC COORDINATION DRAWINGS. COORDINATION DRAWINGS AND PLANS AND OTHER DETAILS SHALL BE DRAWN TO SCALE, ON WHICH THE FOLLOWING ITEMS ARE SHOWN AND COORDINATED WITH EACH OTHER, USING INPUT FROM INSTALLERS OF THE ITEMS INVOLVED INCLUDING BUT NOT LIMITED TO: MECHANICAL EQUIPMENT, DUCTWORK, INSULATION, ALL PIPING, ELECTRICAL DISCONNECTS, ETC. COORDINATION DRAWINGS SHALL INCLUDE ALL MANUFACTURERS REQUIRED CLEARANCES AS WELL AS CODE REQUIRED CLEARANCES.

PROFESSIONAL SEALS:

SOUTH CAROLINA CERTIFICATE OF AUTHORIZATION SSOE, INC No. 746

SOUTH CAROLINA LICENSED PROFESSIONAL ENGINEER 8/6/21 NO. 25453 WESLEY G. BROWN

CONSULTANTS:

SUBMITTAL/REVISION SCHEDULE:

NO.	DATE	DESCRIPTION
	08.06.2021	CONSTRUCTION DOCUMENTS

■ APPROVED FOR CONSTRUCTION
□ NOT APPROVED FOR CONSTRUCTION

CLIENT INFORMATION:

SOUTH CAROLINA EDUCATION LOTTERY

CLIENT PROJECT #: 20048.00
SCEL PROJECT #: Y20-N001-CB

PROJECT INFORMATION:

4TH FLOOR UPFIT

1333 MAIN STREET
COLUMBIA, SC 29201

SSOE/SW PROJECT #: 021-00531-00
SSOE/SW MANAGER: WESLEY BROWN

SSOE | STEVENS & WILKINSON
1501 Main Street, Suite 730
Columbia, SC 29201
T. (803) 765-0320

THIS DRAWING IS THE PROPERTY OF SSOE | STEVENS & WILKINSON. UNAUTHORIZED USE OF ANY KIND, INCLUDING USE ON OTHER PROJECTS, IS PROHIBITED.
© SSOE, INC. 2021

PLUMBING GENERAL

P0.01

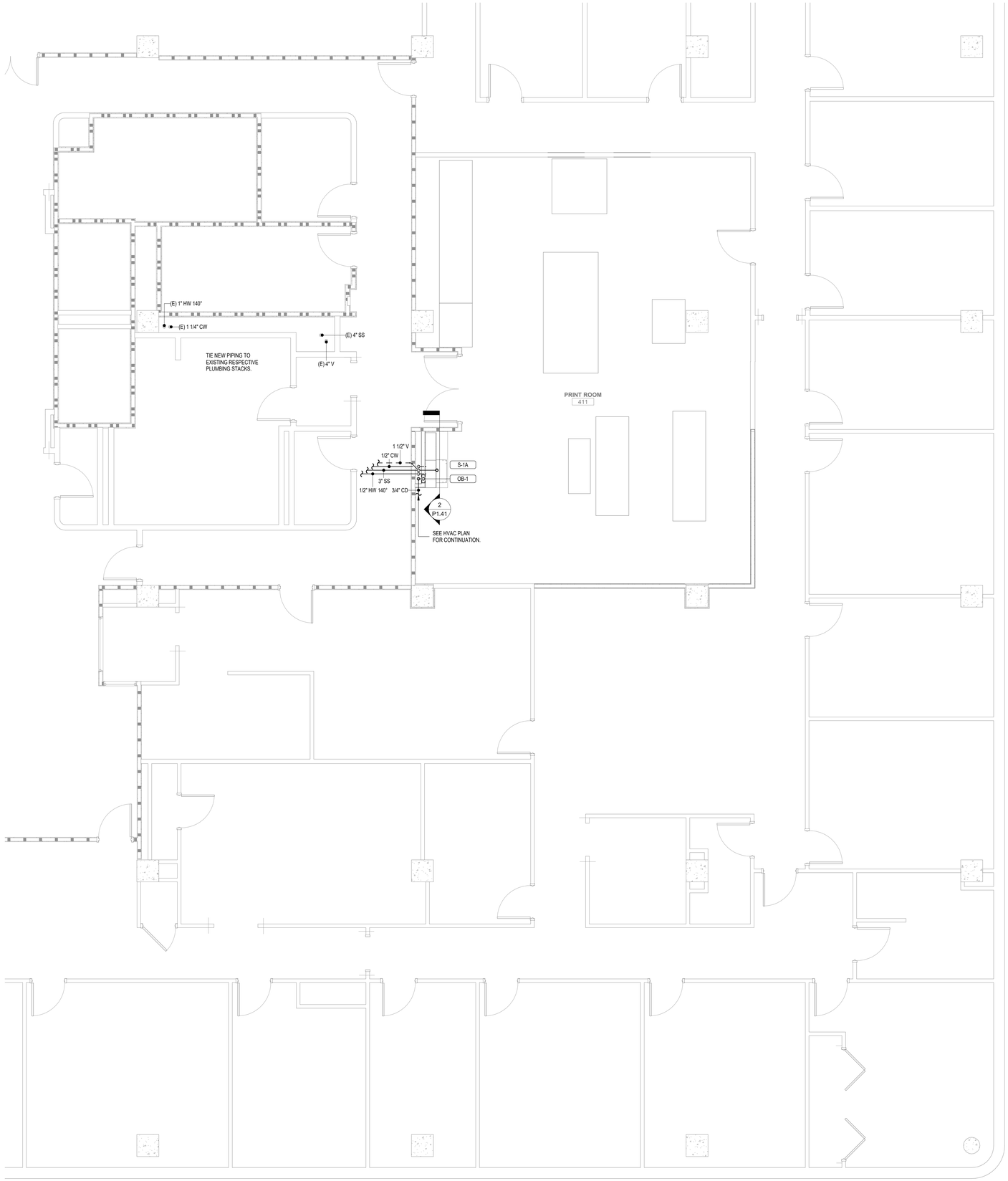

1 LEVEL 4 PLUMBING PLAN
1/4" = 1'-0"

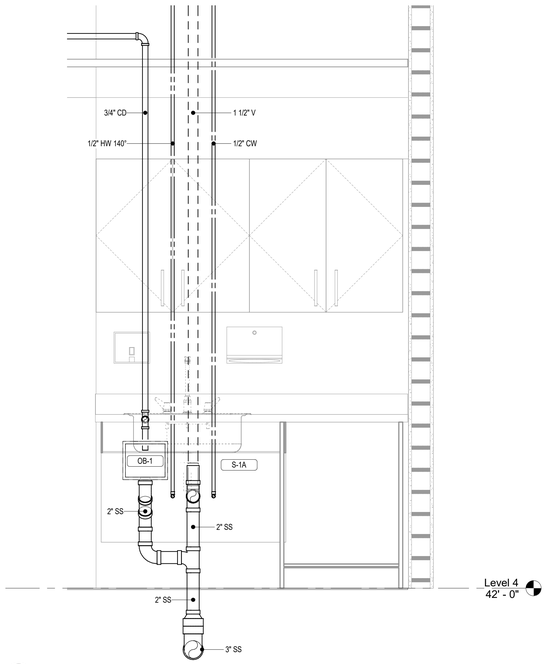

2 PLUMBING SECTION
1" = 1'-0"

TRUE NORTH
PROJECT NORTH

C:\Autodesk\Revit\2004800 - Mech - SC Education Lottery Upfit - Adjusted Scope - V19.2_cwilkes@ssoe.com.rvt :FILE PATH
10/20/2021 3:21:32 PM :PRINT DATE

PROFESSIONAL SEALS:

SOUTH CAROLINA SSOE, INC No. 746 CERTIFICATE OF AUTHORIZATION

SOUTH CAROLINA PROFESSIONAL ENGINEER NO. 25453 WESLEY G. BROWN 8/6/21

CONSULTANTS:

SUBMITTAL/REVISION SCHEDULE:

NO.	DATE	DESCRIPTION
	08.06.2021	CONSTRUCTION DOCUMENTS

■ APPROVED FOR CONSTRUCTION
□ NOT APPROVED FOR CONSTRUCTION

CLIENT INFORMATION:

SOUTH CAROLINA EDUCATION LOTTERY

CLIENT PROJECT #:	20048.00
SCEL PROJECT #:	Y20-N001-CB

PROJECT INFORMATION:

4TH FLOOR UPFIT

1333 MAIN STREET
COLUMBIA, SC 29201

SSOE/SW PROJECT #:	021-00531-00
SSOE/SW MANAGER:	WESLEY BROWN

SSOE | STEVENS & WILKINSON
1501 Main Street, Suite 730
Columbia, SC 29201
T. (803) 765-0320

THIS DRAWING IS THE PROPERTY OF SSOE | STEVENS & WILKINSON. UNAUTHORIZED USE OF ANY KIND, INCLUDING USE ON OTHER PROJECTS, IS PROHIBITED.

© SSOE, INC. 2021

LEVEL 4 PLUMBING PLAN

P1.41

PLUMBING FIXTURES

SYMBOL	DESCRIPTION	MANUFACTURER	MODEL	MATERIAL DESCRIPTION	TRIM					FLOW FIXTURE			FLUSH FIXTURE		PIPE CONNECTIONS				SPECIFICATIONS
					MANUFACTURER	MODEL	FINISH	TYPE	MOTION SENSOR CONTROL	FLOW	TIME DURATION	MAXIMUM MIXED WATER TEMPERATURE	VOLUME PER FLUSH	MINIMUM VOLUME PER FLUSH	SANITARY	VENT	COLD WATER	HOT WATER	
															ROUGH-IN PIPE DIAMETER	PIPE DIAMETER	ROUGH-IN PIPE DIAMETER	ROUGH-IN PIPE DIAMETER	
OB-1	OUTLET BOX	SIOUX CHIEF	696-3	WHITE ABS	N/A	N/A	N/A	N/A	N/A	N/A	N/A	N/A	N/A	N/A	2"	N/A	N/A	N/A	PROVIDE WITH SIOUX CHIEF 696-CF SECONDARY DRAINAGE FUNNEL FOR 1" AIR GAP. PROVIDE WITH MCGUIRE 8872 P-TRAP WITH 1-1/4" 17 GAUGE CHROME-PLATED BRASS ADJUSTABLE BODY. TIE TO SANITARY SEWER AFTER SINK P-TRAP WITHIN PLUMBING CHASE ABOVE FINISHED FLOOR.
S-1A	SINK - COUNTER MOUNT - ADA	ELKAY	LRADQ2521553	STAINLESS STEEL	T&S BRASS	B-2991-WA	CHROME	MANUAL	NO	2.2 GPM	N/A	110°F	N/A	N/A	2"	1 1/2"	1/2"	1/2"	PROVIDE WITH 8" CENTERSET FAUCET HOLES & 25"X21-1/4" RECTANGULAR-SHAPED BOWL. PROVIDE WITH 4" CHROME-PLATED METAL WRIST-ACTION HANDLES WITH RED & BLUE INDEXES FOR HOT & COLD WATER RESPECTIVELY. PROVIDE WITH APOLLO MVA34-LF THERMOSTATIC MIXING VALVE WITH INTEGRAL FILTER & CHECKS. PROVIDE WITH ELKAY LKAD35 BASKET STRAINER & OFFSET TAILPIECE WITH SUPPLIES & STOPS. PROVIDE WITH MCGUIRE 8872C P-TRAP WITH CLEANOUT PLUG & 1-1/4" 17 GAUGE CHROME-PLATED BRASS ADJUSTABLE BODY & ESCUTCHEON.

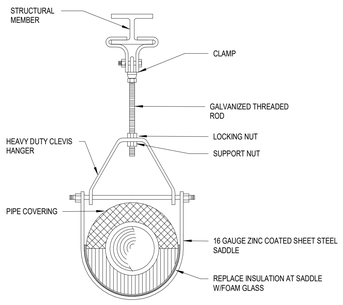

SIZE HANGER AND CLAMP TO ADEQUATELY SUPPORT LOAD (REFER TO MANUFACTURER'S GUIDELINES AND SPECIFICATIONS.)

1 PIPE HANGER
NOT TO SCALE

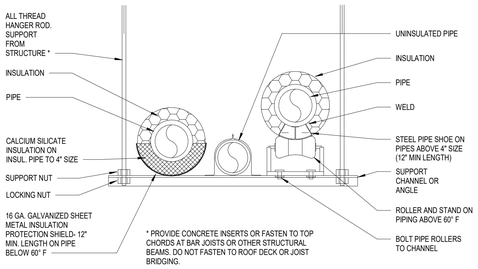

* PROVIDE CONCRETE INSERTS OR FASTEN TO TOP CHORDS AT BAR JOISTS OR OTHER STRUCTURAL BEAMS. DO NOT FASTEN TO ROOF DECK OR JOIST BRIDGING.

2 TRAPEZE PIPE HANGER
NOT TO SCALE

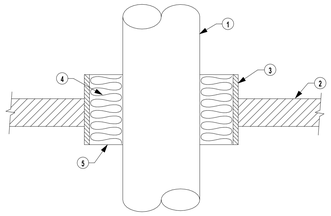

NOTES:

1. PIPES THRU FLOORS REQUIRE CONCRETE CURB NOT SHOWN.
2. FIRE WALL OR FLOOR PENETRATION, SEE SPECIFICATION FOR FIRE STOPPING AND ACOUSTICAL SEALANT.

LEGEND

1. PIPE
2. WALL, FLOOR, PARTITION, ETC.
3. STEEL PIPE SLEEVE
4. VOID SHALL BE PACKED ALL AROUND WITH MINERAL WOOL BATT.
5. SEAL EACH MINERAL WOOL SURFACE WITH NON-HARDENING SEALANT MINIMUM 1" DEPTH

3 PIPE THROUGH STRUCTURE
NOT TO SCALE

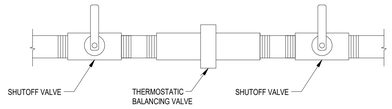

4 THERMOSTATIC BALANCING VALVE
NOT TO SCALE

SSOE
S&W

PROFESSIONAL SEALS:

SOUTH CAROLINA CERTIFICATE OF AUTHORIZATION SSOE, INC No. 746

SOUTH CAROLINA PROFESSIONAL ENGINEER NO. 25453 WESLEY G. BROWN 8/6/21

CONSULTANTS:

SUBMITTAL/REVISION SCHEDULE:

NO.	DATE	DESCRIPTION
	08.06.2021	CONSTRUCTION DOCUMENTS

■ APPROVED FOR CONSTRUCTION
□ NOT APPROVED FOR CONSTRUCTION

CLIENT INFORMATION:

SOUTH CAROLINA EDUCATION LOTTERY

South Carolina Education Lottery®

CLIENT PROJECT #:	20048.00
SCEL PROJECT #:	Y20-N001-CB

PROJECT INFORMATION:

4TH FLOOR UPFIT

1333 MAIN STREET
COLUMBIA, SC 29201

SSOE/SW PROJECT #:	021-00531-00
SSOE/SW MANAGER:	WESLEY BROWN

SSOE | STEVENS & WILKINSON
1501 Main Street, Suite 730
Columbia, SC 29201
T. (803) 765-0320

THIS DRAWING IS THE PROPERTY OF SSOE | STEVENS & WILKINSON. UNAUTHORIZED USE OF ANY KIND, INCLUDING USE ON OTHER PROJECTS, IS PROHIBITED.

© SSOE, INC. 2021

PLUMBING SCHEDULES & DETAILS

P4.01

SEISMIC AND WIND REQUIREMENTS FOR HVAC SYSTEMS

INFORMATION FOR IBC-2018 /ASCE 7-16

A. PER SECTION 301.15 OF THE 2018 EDITION OF THE INTERNATIONAL MECHANICAL CODE, MECHANICAL EQUIPMENT, APPLIANCES AND SUPPORTS (INLCUDING ROOF CURBS & ROOF RAILS) EXPOSED TO WIND SHALL BE DESIGNED AND INSTALLED TO RESIST THE WIND PRESSURES DETERMINED IN ACCORDANCE WITH THE INTERNATIONAL BUILDING CODE. WHERE SEISMIC RESTRAINT IS REQUIRED, THE MORE DEMANDING FORCE OF WIND AND SEISMIC MUST BE USED. SEE SEISMIC INFORMATION CONTAINED IN THE STRUCTURAL DRAWINGS FOR SITE SPECIFIC INFORMATION ON SEISMIC DESIGN CATEGORY.
B. USE APPLICABLE TABLE BELOW FOR SPECIFIC COMPONENTS IMPORTANCE FACTOR DESIGNATIONS.
C. USE APPLICABLE TABLE BELOW TO DETERMINE SEISMIC RESTRAINT REQUIREMENTS FOR EACH MECHANICAL COMPONENT.
D. FOR ALL COMPONENTS REQUIRING SEISMIC RESTRAINT, THE COMPONENT SUPPORTS AND ATTACHMENTS SHALL BE DESIGNED BY A REGISTERED DESIGN PROFESSIONAL.
E. WHERE SEISMIC RESTRAINT IS REQUIRED, HOUSEKEEPING PADS NEEDED FOR THE INSTALLATION OF EQUIPMENT UNDER THIS CONTRACT MUST BE DESIGNED BY THE SEISMIC ENGINEER. DO NOT POUR ANY HOUSEKEEPING PADS PRIOR TO THE THE RECEIPT OF THE SEISMIC SUBMITTAL.
F. SEISMIC RESTRAINTS FOR PIPING AND DUCTWORK MUST BE SHOWN ON LAYOUT DRAWINGS SHOWING SPECIFIC RESTRAINT LOCATIONS ALONG WITH ACCOMPANYING DETAILS AND CALCULATIONS.
G. SEISMIC CATEGORY "C".

COMPONENT IMPORTANCE FACTOR (Ip) DESIGNATION

Ip = 1.0	Ip = 1.5
• ROOFTOP EXHAUST FAN • DUCTWORK & HVAC PIPING • VARIABLE AIR VOLUME TERMINAL UNIT • WATER SOURCE HEAT PUMP	

SEISMIC DESIGN CATEGORY C

		COMPONENT IMPORTANCE FACTOR (Ip)	
		1.0	1.5
COMPONENT IDENTIFICATION		SEISMIC RESTRAINT REQUIREMENT	SEISMIC RESTRAINT REQUIREMENT
ROOF MOUNTED		NOT REQUIRED	RESTRAIN ALL
FLOOR MOUNTED		NOT REQUIRED	RESTRAIN ALL
WALL MOUNTED		NOT REQUIRED	RESTRAIN ALL
COMPONENT SUPPORTS		NOT REQUIRED	RESTRAIN ALL
SUSPENDED EQUIPMENT	INLINE W/ DUCT	NOT REQUIRED	RESTRAIN IF >75 LBS PROVIDE FLEX. CONN. (SEE NOTE 3)
SUSPENDED EQUIPMENT	NOT INLINE W/ DUCT/PIPE	NOT REQUIRED	RESTRAIN ALL
SUSPENDED DUCTILE PIPING (STEEL, ALUMINUM, COPPER, ETC.)		NOT REQUIRED	>2" (SEE NOTE 4)
SUSPENDED NON DUCTILE PIPING (CAST IRON, PLASTIC, CERAMIC)		NOT REQUIRED	RESTRAIN ALL (SEE NOTE 4)
SUSPENDED PIPE ON TRAPEZE		NOT REQUIRED	RESTRAIN IF ANY PIPE ON TRAPEZE > 2" RESTRAIN IF TOTAL WEIGHT OF PIPES ON TRAPEZE > 10 LBS/FT (SEE NOTE 4)
DUCTWORK		NOT REQUIRED	6 SQ.FT. AND LARGER (SEE NOTE 5)
MULTIPLE DUCTS ON TRAPEZE		NOT REQUIRED	RESTRAIN IF TOTAL WEIGHT OF DUCTS ON TRAPEZE > 10 LBS/FT (SEE NOTES 4,5)
COMPONENT CERTIFICATION (SEE NOTE 6)		NOT REQUIRED	REQUIRED

NOTES:
1. EQUIPMENT 20 LBS. OR LESS IS EXEMPT IF FLEXIBLE CONNECTIONS ARE PROVIDED BETWEEN THE COMPONENT AND ASSOCIATED DUCTWORK, PIPING, AND CONDUIT.
2. RESTRAINTS ARE NOT REQUIRED IF THE COMPONENT WEIGHTS 400 LBS. OR LESS, IS MOUNTED AT 4 FT. OR LESS ABOVE A FLOOR, AND HAS FLEXIBLE CONNECTIONS BETWEEN THE COMPONENT AND ASSOCIATED DUCTWORK, PIPING, AND CONDUIT.
3. FLEXIBLE CONNECTIONS REQUIRED FOR PIPE CONNECTIONS ONLY.
4. RESTRAINT IS NOT REQUIRED IF THE PIPING / DUCTWORK IS SUPPORTED BY HANGERS AND EACH HANGER IN THE PIPING RUN IS 12 IN. OR LESS IN LENGTH FROM THE TOP OF THE PIPE TO THE SUPPORTING STRUCTURE. WHERE PIPES ARE SUPPORTED ON A TRAPEZE, THE TRAPEZE SHALL BE SUPPORTED BY HANGERS HAVING A LENGTH OF 12 IN. OR LESS. WHERE ROD HANGERS ARE USED, THEY SHALL BE EQUIPPED WITH SWIVELS, EYE NUTS OR OTHER DEVICES TO PREVENT BENDING IN THE ROD.
5. ALL DUCTWORK, REGARDLESS OF SIZE, DESIGNED TO CARRY TOXIC, HIGHLY TOXIC, OR EXPLOSIVE GASES OR USED FOR SMOKE CONTROL MUST BE RESTRAINED.
6. COMPONENT CERTIFICATION MUST BE SUPPLIED BY THE EQUIPMENT MANUFACTURER AT TIME OF SUBMITTAL FOR REVIEW BY ENGINEER OF RECORD.

DEMOLITION NOTES

1. THESE DRAWINGS ARE BASED ON EXISTING PLANS. REFER TO ARCHITECTURAL DRAWINGS FOR EXACT LOCATION OF DEMOLITION AREAS. THE CONTRACTOR SHALL THOROUGHLY INVESTIGATE THE EXISTING CONDITIONS PRIOR TO BID.

2. THE PURPOSE AND INTENT OF DEMOLITION SHEET IS TO SHOW THE CONTRACTOR ITEMS REQUIRED TO BE REMOVED, BUT IS IN NO WAY LIMITED TO THE ITEMS SHOWN. ALL BIDDERS ARE REQUIRED TO MAKE AN ON-SITE VISIT AND INSPECT EXISTING MECHANICAL CONDITIONS BEFORE FINAL BID DATE.

3. ON-SITE INSPECTIONS ARE REQUIRED TO OCCUR PRIOR TO FINAL BID DATE TO DETERMINE ALL EXISTING CONDITIONS AND COORDINATE POWER DOWN TIMES. BIDDING CONTRACTORS ARE REQUIRED TO SURVEY ALL AREAS OF THE BUILDING PRIOR TO BIDDING TO VIEW THE EXISTING CONDITIONS. ANY ADDITIONAL WORK REQUIRED OR CLARIFICATIONS TO THE WORK SHOWN THAT COULD HAVE BEEN REASONABLY VERIFIED BY THE SURVEY SHALL BE THE RESPONSIBILITY OF THE CONTRACTOR.

4. PERFORM ALL CUTTING AND DRILLING REQUIRED. PATCH ALL HOLES, PAINT AND OTHERWISE REPAIR ALL DAMAGES TO THE BUILDING STRUCTURE AND SURFACES WHICH OCCUR AS A RESULT OF THIS PROJECT. REPAIRS SHALL RESTORE THE STRUCTURE TO THE SAME CONDITION EXISTING PRIOR TO BEGINNING WORK.

5. ANY DAMAGE TO EXISTING CONDITIONS CAUSED BY DEMOLITION AND/OR NEW WORK SHALL BE REPAIRED BY THE CONTRACTOR RESPONSIBLE FOR THE DAMAGE.

6. ANY NEW OR EXISTING PIPING PASSING THROUGH A NEW OR EXISTING WALL CARRYING A FIRE RATING SHALL BE SEALED TIGHT TO THE WALL WITH A UL APPROVED METHOD.

7. ALL DEMOLITION SHALL BE PERFORMED TO PREVENT THE ARBITRARY DESTRUCTION OR INTERRUPTION OF CONCEALED UTILITIES WHICH ARE INTENDED TO REMAIN IN USE AND THE ROUTING OF WHICH CAN NOT BE PREDETERMINED UNTIL DEMOLITION IS STARTED. ALL SUCH DISCOVERIES OF UTILITIES WHICH ARE IN A DIFFERENT LOCATION FROM THAT INDICATED, CHANGE DIRECTION FROM FLOOR-TO-FLOOR, ETC. OR ARE UNIDENTIFIED, SHALL BE REPORTED TO THE ARCHITECT BEFORE REMOVAL OR DISTURBANCE.

8. REMOVE, STORE, CLEAN, REINSTALL, RECONNECT, AND MAKE OPERATIONAL EQUIPMENT INDICATED FOR RELOCATION.

9. CONTRACTOR IS RESPONSIBLE FOR MAINTAINING BUILDING SERVICES DURING DEMOLITION INCLUDING ALL TESTING, SERVICE FEES, RENTAL OF TEMPORARY EQUIPMENT OR INSTALLATION AND CONNECTION OF TEMPORARY SERVICES.

10. WHERE WALLS, FLOORS OR CEILINGS ARE CUT, REMOVED OR DAMAGED FOR INVESTIGATING EXISTING CONDITIONS, DEMOLISHING SERVICES, INSTALLING NEW SERVICES, ETC. THE CONTRACTORS SHALL COORDINATE THE PATCHING OF THE WALLS, FLOORS & CEILINGS TO MATCH EXISTING WITH THE BUILDING FINISHES CONTRACTOR AND/OR GENERAL CONTRACTOR.

11. NEW WORK SHOWN IS SUGGESTED ROUTING. CONTRACTOR SHALL FIELD INVESTIGATE EXISTING SERVICES AVAILABLE. BASED ON THE CONTRACTORS DISCOVERIES, THEY MAY SUGGEST ALTERNATE ROUTINGS. THE ENGINEER OF RECORD SHALL MAKE THE FINAL DETERMINATION ON WHETHER THE SERVICES SHALL BE INSTALLED AS SHOWN OR AS SUGGESTED BY THE CONTRACTOR.

12. WHERE PIPE, INSULATION, OR EQUIPMENT TO REMAIN IS DAMAGED OR DISTURBED, REMOVE DAMAGED PORTIONS AND INSTALL NEW PRODUCTS OF EQUAL CAPACITY AND QUALITY.

SYMBOLS

SYMBOL	DESCRIPTION
1	REVISION NUMBER - SHOWN ON PLANS
	POINT WHERE NEW CONNECTS TO EXISTING
- / ---	NUMBER OF DETAIL ON SHEET NUMBER OF SHEET WHERE DETAIL APPEARS
1	KEYNOTE
	CONTINUATION SYMBOL
Room 1	ROOM NAME AND NUMBER
	ITEM TO BE DEMOLISHED
	AREA NOT IN CONTRACT
18"x8"	SQUARE DUCT SIZE TAG (WIDTH x HEIGHT)
18"/8"	OVAL DUCT SIZE TAG (WIDTH / HEIGHT)
16"Ø	ROUND DUCT SIZE TAG (DIAMETER)
(E)	EXISTING DUCT TAG
	DUCT BEING DEMOLISHED
S/A	SUPPLY AIR
S-O/A	SUPPLY AIR (100% OUTSIDE AIR)
O/A	OUTSIDE AIR
R/A	RETURN AIR
T/A	TRANSFER AIR
E/A	EXHAUST AIR
L/A	RELIEF AIR
GE/A	GREASE EXHAUST AIR
SE/A	SMOKE EXHAUST AIR
FLUE	EXHAUST GAS FLUE
C/A	COMBUSTION AIR
DROP	RECTANGULAR SUPPLY/OUTSIDE AIR DUCT RISE
DROP	ROUND SUPPLY/OUTSIDE AIR DUCT RISE
DROP	RECTANGULAR RETURN/TRANSFER AIR DUCT RISE
DROP	ROUND RETURN/TRANSFER AIR DUCT RISE
DROP	RECTANGULAR EXHAUST/RELIEF AIR DUCT RISE
DROP	ROUND EXHAUST/RELIEF AIR DUCT RISE
SUPPLY OUTLET	RETURN/EXHAUST INLET
	SECTORIZING BAFFLE OR BLANKOFF PANEL
A-12x12 / 150	GRILLES, REGISTERS, AND DIFFUSERS TAG INLET/OUTLET SIZE CFM TYPE (SEE SCHEDULE)
C-6" / 150	LINEAR DIFFUSER NECK SIZE CFM TYPE (SEE SCHEDULE)
	MECHANICAL EQUIPMENT
VAV-XX	MECHANICAL EQUIPMENT TAG
	EXISTING MECHANICAL EQUIPMENT
(E)VAV-XX	EXISTING MECHANICAL EQUIPMENT TAG (TYPICAL FOR ALL EXISTING TAGS)
	MECHANICAL EQUIPMENT FOR REFERENCE
VAV-XX	MECHANICAL EQUIPMENT TAG (REFER TO OTHER DISCIPLINE FOR ADDITIONAL INFORMATION)

SENSOR	SYMBOL	SYMBOL	SENSOR
CARBON DIOXIDE SENSOR	CO2	TH	TEMPERATURE & HUMIDITY SENSOR
CARBON MONOXIDE SENSOR	CO	TS	TEMPERATURE SENSOR
NITROGEN DIOXIDE SENSOR	NO2	T	THERMOSTAT
HUMIDITY SENSOR	HS	MS	MANUAL SWITCH
HUMIDISTAT	H	S	SENSOR

DAMPER	SYMBOL	SYMBOL	DAMPER
FIRE DAMPER	F	B	MANUAL BALANCING DAMPER
SMOKE DAMPER	S	D	BACKDRAFT DAMPER
MOTORIZED DAMPER	M	C	COMBINATION FIRE/SMOKE DAMPER

HVAC PIPING SYMBOLS

SYMBOL	DESCRIPTION
2"	PIPE SIZE TAG (DIAMETER)
	ABOVE GROUND PIPING
1/8" / 12" SLOPE	PIPE SLOPE TAG
	BELOW GROUND PIPING
INVERT: -10' - 1"	PIPE INVERT ELEVATION TAG
2" (E)	EXISTING PIPE TAG
	PIPING BEING DEMOLISHED
CHWR	CHILLED WATER RETURN
CHWS	CHILLED WATER SUPPLY
CD	CONDENSATE DRAINAGE
SWR	SOURCE WATER RETURN
SWS	SOURCE WATER SUPPLY
HHWR	HEATING WATER RETURN
HHWS	HEATING WATER SUPPLY
STM	STEAM
CDR	CONDENSATE RETURN

ABBREVIATIONS

&	AND	HYD	HYDRANT
Ø	ROUND	ID	INDIRECT
A	AIR	IN	INCH
AB	ABOVE BASE	INL	INLET
ABV	ABOVE	INSUL	INSULATION
AC	AIR CONDITIONING	INT	INTERIOR
ACOUS	ACOUSTICAL	INV	INVERT
AD	AREA DRAIN	INWG	INCHES WATER GAUGE
ADD	ADDENDUM	JT	JOINT
ADDL	ADDITIONAL	LAB	LABORATORY
AFF	ABOVE FINISHED FLOOR	LB	POUND
AFUE	ANNUAL FUEL UTILIZATION EFFICIENCY	LB/HR	POUNDS PER HOUR
AG	ABOVE GROUND	LAT	LEAVING AIR TEMPERATURE
ALT	ALTERNATE	LF	LINEAL FOOT
ALUM	ALUMINUM	LOC	LOCATION
AP	ACCESS PANEL	LP	LOW PRESSURE
APPROX	APPROXIMATE	LPG	LIQUEFIED PETROLEUM GAS
ARCH	ARCHITECT/ARCHITECTURAL	LR	LIQUID REFRIGERANT
AV	ACID RESISTANT VENT	LVR	LOUVER
AW	ACID RESISTANT WASTE	LWT	LEAVING WATER TEMPERATURE
AUTO	AUTOMATIC	M/A	MIXED AIR
BFF	BELOW FINISHED FLOOR	MAN	MANUAL
BLDG	BUILDING	MATL	MATERIAL
BLW	BELOW	MAV	MANUAL AIR VENT
BM	BEAM	MAX	MAXIMUM
BO	BY OTHER	MBD	MOTORIZED BYPASS DAMPER
BOT	BOTTOM	MBH	ONE THOUSAND BTU PER HOUR
BSMT	BASEMENT	MCF	ONE THOUSAND CUBIC FEET
BTU	BRITISH THERMAL UNITS	MCW	MAKE-UP COLD WATER
BTUH	BRITISH THERMAL UNITS PER HOUR	MD	MOTORIZED DAMPER
BTWN	BETWEEN	MECH	MECHANICAL
CAP	CAPACITY	MFR	MANUFACTURER
CB	CATCH BASIN	MH	MANHOLE
CCW	COUNTER CLOCKWISE	MIN	MINIMUM
CFCV	CONSTANT FLOW CONTROL VALVE	MISC	MISCELLANEOUS
CFM	CUBIC FEET PER MINUTE	MTR	MOTOR
CHW	CIRCULATING HOT WATER	MU/A	MAKE-UP/AIR
CI	CAST IRON	N	NECK
CLG	CEILING	NC	NOISE CRITERIA
CLG	COOLING	NC	NORMALLY CLOSED
CO	CLEAN OUT	NIC	NOT IN CONTRACT
COL	COLUMN	NO	NUMBER
COMB	COMBINATION	NO	NORMALLY OPEN
CONC	CONCRETE	NOM	NOMINAL
COND	CONDENSATE	NTS	NOT TO SCALE
CONF	CONFERENCE	O	OXYGEN
CONN	CONNECT	O/A	OUTSIDE AIR
CONST	CONSTRUCTION	OC	ON CENTER
CONT	CONTINUE/CONTINUATION	OF	OVERFLOW
CONTR	CONTRACT/CONTRACTOR	OPNG	OPENING
COORD	COORDINATE	PD	PRESSURE DROP
CTR	CENTER	PIV	POST INDICATOR VALVE
CUFT	CUBIC FEET	PLBG	PLUMBING
CV	CHECK VALVE	PR	PAIR
CW	COLD WATER	PREL	PRELIMINARY
CW	CLOCKWISE	PRESS	PRESSURE
D	DEGREE	PRIM	PRIMARY
DB	DRY BULB	PRV	PRESSURE REDUCING VALVE
DET	DETAIL	PSI	POUNDS PER SQUARE INCH
DIA	DIAMETER	PSIG	POUNDS PER SQUARE INCH GAUGE
DIAG	DIAGONAL	PW	POTABLE WATER
DISCH	DISCHARGE	PWR	POWER
DIV	DIVISION	R	DUCT RISER
DI	DEIONIZED WATER	R/A	RETURN AIR
DMPR	DAMPER	RCP	RADIANT CEILING PANEL
DN	DOWN	RD	ROOF DRAIN
DWG	DRAWING	REC	RECESSED
DW	DISTILLED WATER	RED	REDUCER
EA	EACH	REFR	REFRIGERATION
EAT	ENTERING AIR TEMPERATURE	RH	RELATIVE HUMIDITY
EL	ELBOW	REQD	REQUIRED
ELEC	ELECTRICAL	REV	REVERSE
ELEV	ELEVATION	RL/A	RELIEF AIR
EP	EXPLOSION PROOF	RM	ROOM
EQ	EQUAL	RPM	REVOLUTIONS PER MINUTE
EQUIP	EQUIPMENT	RSD	ROOF SAFETY DRAIN
EWC	ELECTRIC WATER COOLER	RW	RAIN WATER
EWT	ENTERING WATER TEMPERATURE	SF	SQUARE FOOT
E/A	EXHAUST AIR	S/A	SUPPLY AIR
EAH	EXHAUST HOOD	SAN	SANITARY
EXIST	EXISTING	SCHED	SCHEDULE
EXP	EXPANSION	SECT	SECTION
EXPJT	EXPANSION JOINT	SF	SQUARE FOOT
EXT	EXTERIOR	SD	SMOKE DAMPER
F	DEGREES FAHRENHEIT	SHT	SHEET
FCO	FLOOR CLEAN OUT	SIM	SIMILAR
FD	FLOOR DRAIN	SLV	SLEEVE
FD	FIRE DAMPER	SM	SURFACE MOUNT
FDV	FIRE DEPARTMENT VALVE	SP	STANDPIPE
FHC	FIRE HOSE CABINET	SP	STATIC PRESSURE
FL	FLOOR	SPEC	SPECIFICATION
FLEX	FLEXIBLE	SPS	STATIC PRESSURE STATION
FLG	FLANGE	SQ	SQUARE
FO	FUEL OIL	SR	SUCTION REFRIGERANT
FOV	FUEL OIL VENT	SS	STAINLESS STEEL
FOR	FUEL OIL RETURN	STD	STANDARD
FOS	FUEL OIL SUPPLY	STM	STEAM
FPM	FEET PER MINUTE	STRUCT	STRUCTURAL
FRP	FIBERGLASS REINFORCED PIPE	SUCT	SUCTION
FS	FULL SIZE	SUSP	SUSPENDED
FS	FLOOR SINK	T	THERMOSTAT
FT	FOOT/FEET	TCP	TEMPERATURE CONTROL PANEL
FTG	FOOTING	TD	TEMPERATURE DROP
FTR	FIN TUBE RADIATION	TDR	TRENCH DRAIN
FUT	FUTURE	TEFC	TOTALLY ENCLOSED FAN COOLED
GA	GAGE/GAUGE	TEMP	TEMPERATURE
GAL	GALLON	TYP	TYPICAL
GALV	GALVANIZED	UFD	UNDER FLOOR DUCT
GC	GENERAL CONTRACTOR	UG	UNDERGROUND
GEN	GENERATOR	VAC	VACUUM
GENL	GENERAL	V	VENT
GPM	GALLONS PER MINUTE	VAV	VARIABLE AIR VOLUME
GR	GRADE	VEL	VELOCITY
GW	GREASE WASTE	VENT	VENTILATION
HB	HOSE BIB	VERT	VERTICAL
HD	HEAD	VOL	VOLUME
HHWR	HYDRONIC HOT WATER RETURN	VTR	VENT THROUGH ROOF
HHWS	HYDRONIC HOT WATER SUPPLY	W	WASTE
HORZ	HORIZONTAL	WB	WET BULB
HP	HORSE POWER	WCO	WALL CLEAN OUT
HP	HIGH PRESSURE	WH	WALL HYDRANT
HTG	HEATING		
HTR	HEATER		
HW	HOT WATER		

EQUIPMENT ABBREVIATIONS

AC	AIR CONDITIONING UNIT	FP	FIRE PUMP
ACC	AIR COOLED CONDENSER	GI	GREASE INTERCEPTOR
ACCU	AIR COOLING CONDENSING UNIT	GRV	GRAVITY ROOF VENTILATOR
AFMS	AIR FLOW MEASURING STATION	H	HUMIDIFIER
AHU	AIR HANDLING UNIT	HWP	HEATING WATER PUMP
AS	AIR SEPARATOR	HX	HEAT EXCHANGER
B	BOILER	HPU	HEAT PUMP UNIT
CF	CABINET FAN	HRU	HEAT RECOVERY UNIT
CF	CHEMICAL FEEDER	ILC	INLINE CENTRIFUGAL
CFP	CHEMICAL FEEDER PUMP	PF	PROPELLER FAN
CH	CHILLER	PRV	POWER ROOF VENTILATOR
CRU	CONDENSATE RETURN UNIT	PWF	POWER WALL FAN
CT	COOLING TOWER	RE	RETURN/EXHAUST FAN
CUH	CABINET UNIT HEATER	RTU	ROOFTOP UNIT
CWP	CONDENSER WATER PUMP	SA	SHOCK ABSORBER
CHWP	CHILLED WATER PUMP	SAT	SOUND ATTENUATOR
DBP	DOMESTIC WATER BOOSTER PUMP	SEP	SEWAGE EJECTOR PUMP
DC	DUCT MOUNTED COIL	SF	SUPPLY FAN
DCP	DOMESTIC WATER CIRCULATING PUMP	SP	SUMP PUMP
EF	EXHAUST FAN	UH	UNIT HEATER
EDC	ELECTRIC DUCT COIL	US	UTILITY SET
ET	EXPANSION TANK	UV	UNIT VENTILATOR
EWH	ELECTRIC WATER HEATER	WFMS	WATER FLOW MEASURING STATION
FCU	FAN COIL UNIT	WH	WATER HEATER

NOTES

1. THE SPECIFICATIONS AND ACCOMPANYING DRAWINGS DESCRIBE APPROVED MANUFACTURERS AND THE SCOPE OF WORK OF THIS PROJECT. ALL LABOR, MATERIAL, EQUIPMENT, MACHINERY, SUPERVISION, MANAGEMENT AND OTHER ITEMS NECESSARY TO PROVIDE A COMPLETE INSTALLATION OF ALL SYSTEMS SHOWN ON DRAWINGS AND/OR SPECIFICATIONS TO BE PROVIDED BY THE CONTRACTOR.

2. ALL WORK IS TO BE PERFORMED IN STRICT ACCORDANCE WITH THE LATEST EDITION OF THE INTERNATIONAL MECHANICAL CODE AND BUILDING CODE, NFPA CODES, AND APPLICABLE STATE AND LOCAL CODES AND ORDINANCES. OBTAIN ALL PERMITS REQUIRED, GIVE ALL LEGAL NOTICES, AND HAVE ALL WORK INSPECTED AS REQUIRED BY LOCAL OR STATE LAW.

3. DRAWINGS SHOULD BE INTERPRETED AS GENERAL LAYOUT AND ARRANGEMENT DRAWINGS. THE DRAWINGS ARE NOT INTENDED TO SHOW AND CANNOT SHOW COMPLETE OR PRECISE MEASUREMENTS AND DETAILS OF THE BUILDING AND INSTALLATION IN EVERY RESPECT, AND THEY DO NOT INCLUDE ALL DETAILS OF MANUFACTURED EQUIPMENT, CONSTRUCTION, PIPING, DUCT WORK, ETC. MEASUREMENT FIGURES WRITTEN UPON THE DRAWING ARE TO BE RELIED UPON AS A DIMENSION FOR INSTALLATION PURPOSES, EXACT LOCATIONS AND MEASUREMENTS ARE TO BE DEFINED IN THE FIELD AND THE CONTRACTOR IS RESPONSIBLE FOR THEIR ACCURACY AND USE IN CONSTRUCTION OF THE WORK. COORDINATE CLOSELY WITH OWNER & OTHER TRADES.

4. TRANSITION RECTANGULAR DUCTWORK ON BOTTOM AND SIDES. MAINTAIN TOP OF DUCTWORK LEVEL AND AS HIGH AS POSSIBLE UNLESS NOTED OTHERWISE.

5. FLEXIBLE DUCT RUN OUTS TO CEILING DIFFUSERS SHALL BE FREE OF 90 DEG. TURNS, SAGS AND KINKS AND SHALL BE THE SAME SIZE AS THE DIFFUSER INLET. MAXIMUM LENGTH= 6 FEET.

6. ALL DUCT TRANSITIONS FROM SQUARE TO ROUND ARE TO BE SMOOTH AND TAPERED SQUARE TO ROUND TRANSITIONS. SPIN-IN FITTINGS AT THE END OF CAPPED DUCTS ARE NOT ACCEPTABLE.

7. DUCT DIMENSIONS SHOWN ARE INSIDE CLEAR DIMENSION.

8. USE 45° ENTRY, LOW LOSS TAP/FITTING WITH QUADRANT AND EXTRACTOR IN ALL DUCT TAKE-OFFS. PROVIDE WITH 2" BUILD-OUT FOR LOCKING QUADRANT ON INSULATED DUCT.

9. PROVIDE A MANUAL DAMPER IN ALL RUNOUTS TO EACH DIFFUSER, GRILLE, AND DEDICATED OUTDOOR AIR DUCT RUNOUTS. ADD MANUAL VOLUME DAMPERS AS RECOMMENDED BY T&B INITIAL SURVEY. (OBD AT DIFFUSER NOT ALLOWED)

10. ALL SUPPLY, RETURN, OR EXHAUST DUCT RUNOUTS TO GRILLES AND DIFFUSERS ARE TO BE THE SAME SIZE AS GRILLE NECK UNLESS NOTED OTHERWISE.

11. ALL SLOT DIFFUSERS TO HAVE 2-WAY AIR FLOW PATTERNS & ALL 24"x24" DIFFUSERS TO HAVE 4-WAY AIR FLOW PATTERNS UNLESS INDICATED OTHERWISE ON DRAWINGS.

12. VERIFY LOCATION OF ALL THERMOSTAT AND FAN SWITCH LOCATIONS WITH THE ARCHITECT. MOUNT BOTTOM OF ALL THERMOSTATS 3' 4" ABOVE FINISHED FLOOR UNLESS NOTED OTHERWISE. SPACES WITH CO2 SENSORS SHALL MOUNT THE CO2 SENSOR ABOVE THE THERMOSTAT.

13. CONDENSATE LINES ARE TO BE TRAPPED AND SLOPED 1/8 " PER FOOT IN HORIZONTAL RUNS, AND TERMINATE ABOVE A DRAIN OR RECEPTOR.

14 .COORDINATE VOLTAGE AND PHASE OF ALL MECHANICAL EQUIPMENT WITH ELECTRICAL CONTRACTOR BEFORE SUBMITTING SHOP DRAWINGS OR ORDERING EQUIPMENT.

15. COORDINATE LOCATION & PROVIDE ALL ACCESS DOORS OR PANELS FOR VALVES, DAMPERS, OR ANY OTHER EQUIPMENT REQUIRING SERVICE ACCESS.

16. ALL ELECTRICAL DISCONNECT SWITCHES FOR MECHANICAL EQUIPMENT ARE TO BE PROVIDED AND INSTALLED BY DIVISION 23. THIS INFORMATION SHALL BE INDICATED ON SHOP DRAWINGS.

17. ON SQUARE & RECTANGULAR DUCTWORK, ALL MITERED ELBOWS AND BULL HEAD TEES ARE TO BE CONSTRUCTED WITH SINGLE-THICKNESS VANES (1.5" VANE SPACING) WITH A FITTING LOSS COEFFICIENT OF 0.11 OR LESS.

18. REFER TO ARCHITECTURAL PLANS AND REFLECTED CEILING PLANS TO COORDINATE ACTUAL LOCATIONS OF MECHANICAL EQUIPMENT WITH LAYOUT OF WALLS, PARTITIONS AND LOCATIONS OF CEILING MOUNTED DEVICES.

19. FOLLOW MANUFACTURER'S RECOMMENDATIONS AND WRITTEN INSTRUCTIONS FOR THE INSTALLATION OF ALL EQUIPMENT, MATERIALS AND ASSEMBLIES INDICATED ON THESE CONTRACT DOCUMENTS. SHOULD CONFLICTS ARISE BETWEEN THESE DOCUMENTS, CODE REQUIREMENTS AND MANUFACTURER'S INSTRUCTIONS, THE MORE STRINGENT REQUIREMENT ARE TO GOVERN.

20. COORDINATE WORK WITH THAT OF ALL OTHER TRADES TO ELIMINATE INTERFERENCE'S. EXAMINE IN ADVANCE THE LOCATION OF ELECTRICAL SYSTEMS, DUCTS, PIPING, STRUCTURES, CONDUITS AND OTHER EQUIPMENT AND COMPONENTS TO BE INSTALLED AND PROPERLY COORDINATE THE INSTALLATION OF MECHANICAL WORK TO AVOID INTERFERENCE'S BEFORE FABRICATING AND INSTALLING WORK. DETERMINE ALL DIMENSIONS BY ACTUAL FIELD CONDITIONS, MEASUREMENTS FROM MANUFACTURER'S CERTIFIED PRINTS AND COORDINATION WITH OTHER TRADES AND TO MODIFY, OFFSET OR OTHERWISE ACCOMMODATE ALL EQUIPMENT TO THE STRUCTURE, UTILITIES AND OTHER EQUIPMENT.

21. SUPPORT AND FASTEN ALL DUCTWORK, EQUIPMENT, ETC. SECURELY IN PLACE. SPACE, SECURE AND ADJUST HANGERS AND DUCTS, WITHOUT DEFLECTION OR SAG. CHAIN, STRAP, PERFORATED STRAP, WIRE HANGERS, OR WOOD PLUGS ARE PROHIBITED.

22. ITEMS SPECIFIED HEREIN BY MANUFACTURER AND MODEL NUMBER ARE TO BE CONSIDERED THE MINIMUM QUALITY ACCEPTABLE FOR THE SPECIFIED APPLICATION AND ESTABLISH A STANDARD OF REQUIRED FUNCTION, DIMENSION, APPEARANCE, SERVICEABILITY, AVAILABILITY OF SPARE PARTS AND QUALITY TO BE MET BY ANY PROPOSED SUBSTITUTION. FOR SUBSTITUTIONS, IT IS TO BE THE RESPONSIBILITY OF THE CONTRACTOR TO PROVIDE SUFFICIENT INFORMATION TO ESTABLISH "OR EQUAL" STATUS, IN THE DESIGN ENGINEER'S OPINION AND TO COORDINATE INSTALLATION OF THE AVAILABLE SPACE. INCREASED COSTS TO THE PROJECT ASSOCIATED WITH CONTRACTOR SUBSTITUTIONS SHALL BE THE RESPONSIBILITY OF THE CONTRACTOR.

23. MAKE ALL NECESSARY TESTS, TRIAL OPERATIONS, ETC. REQUIRED TO PROVE THAT ALL SYSTEMS ARE IN COMPLETE SERVICEABLE CONDITION AND WILL FUNCTION AS INTENDED. ALL COSTS OF TEST SHALL BE BORNE BY THIS CONTRACTOR. SHOULD TEST REVEAL ANY DEFECTIVE MATERIAL OR WORKMANSHIP, SUCH WORK SHALL BE REPLACED AND TESTS REPEATED. ALL CORRECTIONS SHALL BE MADE USING NEW MATERIALS.

24. FURNISH ALL NECESSARY ASSISTANCE AS DIRECTED BY THE OWNER WHICH MAY BE REQUIRED TO PROPERLY INSTRUCT THE OWNER IN THE OPERATION OF ALL EQUIPMENT. THIS SHALL INCLUDE PERSONAL INSTRUCTION COVERING ROUTINE MAINTENANCE AND OPERATION OF EQUIPMENT.

25. OPERATING AND MAINTENANCE MANUALS FOR ALL EQUIPMENT SHALL INCLUDE BUT ARE NOT LIMITED TO THE FOLLOWING:INCLUDING NECESSARY CUT SHEETS, CHARTS, WRITTEN INSTRUCTIONS, WIRING DIAGRAMS, FINAL AS-BUILT DRAWINGS WITH BALANCED AIR FLOWS INDICATED ETC. THESE MAINTENANCE INSTRUCTIONS SHALL BE BOUND IN SUITABLE HARD BACK RING BIDDERS, PROPERLY INDEXED, AND DELIVERED TO THE OWNER AND ARCHITECT.

26. SUBMITTALS SHALL COMPLY WITH THE REQUIREMENTS OF SPECIFICATION SECTION 013300. SUBMITTAL'S SHALL INCLUDE BUT ARE NOT LIMITED TO THE FOLLOWING:

PRODUCT DATA-
PERFORMANCE DATA AT DESIGN CONDITIONS, PUMP CURVES, FAN CURVES, WEIGHT, MATERIALS OF CONSTRUCTION, GAUGES, OPTIONS AND ACCESSORIES.

SHOP DRAWINGS-
DIMENSIONS, WEIGHT DISTRIBUTION, REQUIRED CLEARANCES, METHOD OF ASSEMBLY, LOCATION SIZES AND UTILITY REQUIREMENTS OF ALL CONNECTIONS.

WIRING DIAGRAMS-
ELECTRICAL POWER REQUIREMENTS AND ASSOCIATED ELECTRICAL LOADS, LADDER DIAGRAMS INDICATING CONTROL LOGIC, DIFFERENTIATE BETWEEN FACTORY AND FIELD WIRING.

27. MAINTAIN AN ACCURATE SET OF RECORD DRAWINGS ON-SITE AT ALL TIMES DURING CONSTRUCTION WHICH SHALL BE AVAILABLE FOR EXAMINATION BY THE OWNER'S REPRESENTATIVE UPON REQUEST. PROVIDE THE OWNER WITH A COMPLETE MARKED-UP SET OF THE CONTRACT DRAWINGS AT PROJECT COMPLETION.

28. CORRECT ANY DEFECTS IN WORKMANSHIP AND/OR MATERIAL WHICH OCCUR DURING THE FIRST YEAR OF OPERATION. CERTIFICATE WILL COMMENCE ON THE DATE OF ACCEPTANCE OF WORK BY OWNER. SUBMIT WRITTEN CERTIFICATE WITH MAINTENANCE DATA. THE CONTRACTOR SHALL PROVIDE A WRITTEN MANUFACTURER'S WARRANTY ON ALL PARTS AND LABOR FOR A PERIOD OF 1 YEAR FROM THE DATE OF SUBSTANTIAL COMPLETION. WHERE INDICATED, PROVIDE EXTENDED WARRANTIES FOR PERIODS INDICATED.

29. ALL EQUIPMENT FURNISHED SHALL BE UL APPROVED AND SHALL BE LABELED OR LISTED BY UL.

30. REESTABLISH THE INTEGRITY OF ALL RATED ASSEMBLIES IN WHICH HIS WORK REQUIRES ALTERATION OR MODIFICATION.

31. FRAME AND SEAL ALL DUCT PENETRATIONS THROUGH WALLS AND FLOORS AND ROOF.

32. MATERIAL SHALL BE NEW AND MADE BY AN APPROVED MANUFACTURER. PIPING SHALL BE INSTALLED SO THAT IT CAN BE COMPLETELY DRAINED. EQUIPMENT AND MATERIALS SHALL BE INSTALLED, ERECTED OR APPLIED WITH THE BEST ENGINEERING OR CONSTRUCTION PRACTICE. MANUFACTURER'S INSTALLATION INSTRUCTIONS SHALL BE OBSERVED, AS WELL AS ANY SPECIFIC INSTRUCTIONS GIVEN BY THE OWNER. ALL SUBSTANDARD WORK INSTALLED BY THIS CONTRACTOR SHALL BE REPLACED BY THIS CONTRACTOR AT NO ADDITIONAL EXPENSE TO THE OWNER. IF THIS CONTRACTOR DAMAGES EXISTING WORK, HE SHALL PAY THE COST OF REPLACEMENT OF THE DAMAGED WORK AT NO ADDITIONAL EXPENSE TO THE OWNER.

33. CLEANING AGENTS SHALL BE COMPATIBLE WITH THE SYSTEM BEING CLEANED. PRIOR TO ERECTION, INSPECT AND CLEAN AS REQUIRED TO REMOVE SAND, DIRT AND SCALE. PRIOR TO FLUSHING SYSTEM, CONTROL VALVES, RUPTURE DISCS, ETC. THAT MAY BE DAMAGED BY CLEANING SHALL BE REMOVED AND REPLACED WITH SPOOL PIECES, PLUGS, ETC. REMOVED ITEMS SHALL BE CLEANED SEPARATELY. NEW PIPE SHALL BE VALVED OFF FROM EXISTING, THEN FILLED AS REQUIRED. ALLOW SYSTEM TO BE FILLED COMPLETELY. THEN DRAIN COMPLETELY. CONTRACTOR SHALL INSTALL DRAINS AS REQUIRED TO ENSURE COMPLETE DRAINAGE OF SYSTEM. ALL DAMAGE OR DISCOLORATION OF EQUIPMENT OR THE BUILDING DUE TO FAILURE TO CLEAN UP THOROUGHLY OR FLUSH OUT PIPING PROPERLY SHALL BE CORRECTED WITHOUT ADDITIONAL COST TO THE OWNER. DOMESTIC WATER LINES SHALL BE DISINFECTED IN ACCORDANCE WITH THE INTERNATIONAL PLUMBING CODE.

34. SHUT-DOWN OF EXISTING SERVICES WHICH AFFECTS THE OPERATION WITHIN THE FACILITY REQUIRED TO ACCOMMODATE CONSTRUCTION ACTIVITIES DESCRIBED HEREIN, SHALL BE SCHEDULED WITH THE OWNER'S REPRESENTATIVE AND APPROVED IN WRITING. ALL SERVICES SHALL REMAIN OPERATIONAL DURING NORMAL BUSINESS HOURS UNLESS SPECIFICALLY APPROVED OTHERWISE.

35. PIPING INSTALLATIONS SHALL BE PER CURRENT MODERN INDUSTRY METHODS. PROVIDE PIPE SLEEVE LARGE ENOUGH FOR PIPE AND INSULATION WHERE PIPE PASSES THROUGH FLOORS OR WALLS. PIPE PASSING THROUGH FIRE WALLS SHALL BE PACKED WITH A LISTED FIRE PENETRATION SYSTEM. INSTALL EQUIPMENT LEVEL AND PLUMB, PARALLEL AND PERPENDICULAR TO OTHER BUILDING SYSTEMS AND COMPONENTS IN EXPOSED INTERIOR SPACES, EXCEPT WHERE OTHERWISE INDICATED.

36. CONTRACTOR IS RESPONSIBLE FOR ANY CUTTING AND PATCHING REQUIRED WHICH IS INCIDENTAL TO THE INSTALLATION OF HIS WORK. CUT, CHANNEL, CHASE AND DRILL FLOORS, WALLS, PARTITIONS, CEILINGS, AND OTHER SURFACES NECESSARY FOR PIPING INSTALLATIONS AFTER COORDINATING w/ OTHER TRADES. PERFORM CUTTING BY SKILLED MECHANICS OF THE TRADES INVOLVED. REPAIR CUT SURFACES USING MATERIALS MATCHING SPECIFIED MATERIALS AND METHODS REQUIRED FOR SURFACE. REFER TO STRUCTURAL DRAWINGS FOR DETAILS ON CONCRETE SLAB OPENINGS.

37. REFER TO ARCHITECTURAL PLANS TO VERIFY RATINGS (FIRE, FIRE/SMOKE, SMOKE) OF ALL WALLS AND FLOORS BEING PENETRATED.

38. COORDINATE ALL VOLTAGES, PHASES AND CAPACITIES WITH ELECTRICAL PLANS

39. THE INSTALLATION OF DUCT MOUNTED SMOKE DETECTORS THAT ARE NOT PART OF A LISTED SMOKE DAMPER OR FIRE SMOKE DAMPER ARE TO BE FURNISHED BY THE FIRE ALARM CONTRACTOR AND INSTALLED BY THE MECHANICAL CONTRACTOR. THESE SHALL BE WIRED TO THE FIE ALARM SYSTEM BY THE FIRE ALARM CONTRACTOR. TO DETERMINE IF SMOKE DETECTORS ARE REQUIRED, REFER TO THE ELECTRICAL FIRE ALARM PLANS.

THE INSTALLATION OF DUCT MOUNTED SMOKE DETECTORS THAT ARE PART OF A LISTED SMOKE DAMPER OR FIRE SMOKE DAMPER ARE TO BE FURNISHED AND INSTALLED BY THE MECHANICAL CONTRACTOR. THESE SHALL BE CONNECTED TO THE FIRE ALARM SYSTEM VIA ADDRESSABLE INPUT MODULES AND CONNECTED TO THE AUXILIARY CONTACTS FURNISHED WITH THE DAMPER ASSEMBLY. TO DETERMINE IF SMOKE DETECTORS ARE REQUIRED, REFER TO THE ELECTRICAL FIRE ALARM PLANS.

40. ACCESSORIES FOR EQUIPMENT THAT ARE LISTED ON SCHEDULE DRAWINGS ARE TO BE PROVIDED BY THE CONTRACTOR. THE ACCESSORIES ARE TO BE FURNISHED AND INSTALLED AS A COMPLETED OPERATING SYSTEM.

41. PROVIDE DUCT LINER FOR THE FIRST 25' DOWNSTREAM OF EACH AIR HANDLING UNIT AND FIRST 5' DOWNSTREAM OF EACH TERMINAL UNIT (SINGLE DUCT AND FAN POWERED).

42. SEE STRUCTURAL PLANS FOR LINTEL REQUIREMENTS FOR PENETRATIONS THROUGH WALLS.

43. WHERE BMS IS PRESENT OR BEING PROVIDED, SPACES SERVED BY DUCTED AND DUCTLESS SPLIT SYSTEMS THAT DO NOT HAVE BACNET CONTROLS SHALL BE PROVIDED WITH WALL MOUNTED BACNET SENSOR TO MONITOR/ALARM TEMPERATURE OF SPACE.

44. SLEEVE AND SLEEVE SEALS ARE REQUIRED FOR MECHANICAL PIPING PENETRATIONS THROUGH EXTERIOR CONCRETE WALLS ABOVE GRADE, EXTERIOR CONCRETE WALLS BELOW GRADE, CONCRETE SLABS ON GRADE, CONCRETE SLABS ABOVE GRADE AND INTERIOR PARTITIONS. REFER TO PROJECT SPECIFICATIONS.

45. CONTRACTOR SHALL PROVIDE 1/4-INCH SCALE PROJECT SPECIFIC COORDINATION DRAWINGS. COORDINATION DRAWINGS AND PLANS AND OTHER DETAILS SHALL BE DRAWN TO SCALE, ON WHICH THE FOLLOWING ITEMS ARE SHOWN AND COORDINATED WITH EACH OTHER, USING INPUT FROM INSTALLERS OF THE ITEMS INVOLVED INCLUDING BUT NOT LIMITED TO: MECHANICAL EQUIPMENT, DUCTWORK, INSULATION, ALL PIPING, ELECTRICAL DISCONNECTS, ETC. COORDINATION DRAWINGS SHALL INCLUDE ALL MANUFACTURERS REQUIRED CLEARANCES AS WELL AS CODE REQUIRED CLEARANCES.

46. WHERE BI-POLAR IONIZATION IS BEING USED, THE CONTRACTOR IS TO PROVIDE AN INDEPENDENT THIRD PARTY INSPECTION OF ALL BI-POLAR IONIZATION UNITS LOCATED IN AIR HANDLING SYSTEMS. THIS INSPECTION TO BE SCHEDULED FOR ONE YEAR AFTER SUBSTANTIAL PROJECT COMPLETION. PROVIDE A COMPLETE REPORT OF FINDINGS TO THE OWNER AND ENGINEER OF RECORD.

ssoe®

S&W

PROFESSIONAL SEALS:

SOUTH CAROLINA SSOE, INC No. 746 CERTIFICATE OF AUTHORIZATION

SOUTH CAROLINA LICENSED PROFESSIONAL ENGINEER 8/6/21 NO. 25453 WESLEY G. BROWN

CONSULTANTS:

SUBMITTAL/REVISION SCHEDULE:

NO.	DATE	DESCRIPTION
	08.06.2021	CONSTRUCTION DOCUMENTS

■ APPROVED FOR CONSTRUCTION
□ NOT APPROVED FOR CONSTRUCTION

CLIENT INFORMATION:

SOUTH CAROLINA EDUCATION LOTTERY

South Carolina Education Lottery®

CLIENT PROJECT #:	20048.00
SCEL PROJECT #:	Y20-N001-CB

PROJECT INFORMATION:

4TH FLOOR UPFIT

1333 MAIN STREET
COLUMBIA, SC 29201

SSOE/SW PROJECT #:	021-00531-00
SSOE/SW MANAGER:	WESLEY BROWN

ssoe® | STEVENS & WILKINSON
1501 Main Street, Suite 730
Columbia, SC 29201
T. (803) 765-0320

THIS DRAWING IS THE PROPERTY OF SSOE | STEVENS & WILKINSON. UNAUTHORIZED USE OF ANY KIND, INCLUDING USE ON OTHER PROJECTS, IS PROHIBITED.
© SSOE, INC. 2021

HVAC GENERAL

M0.01

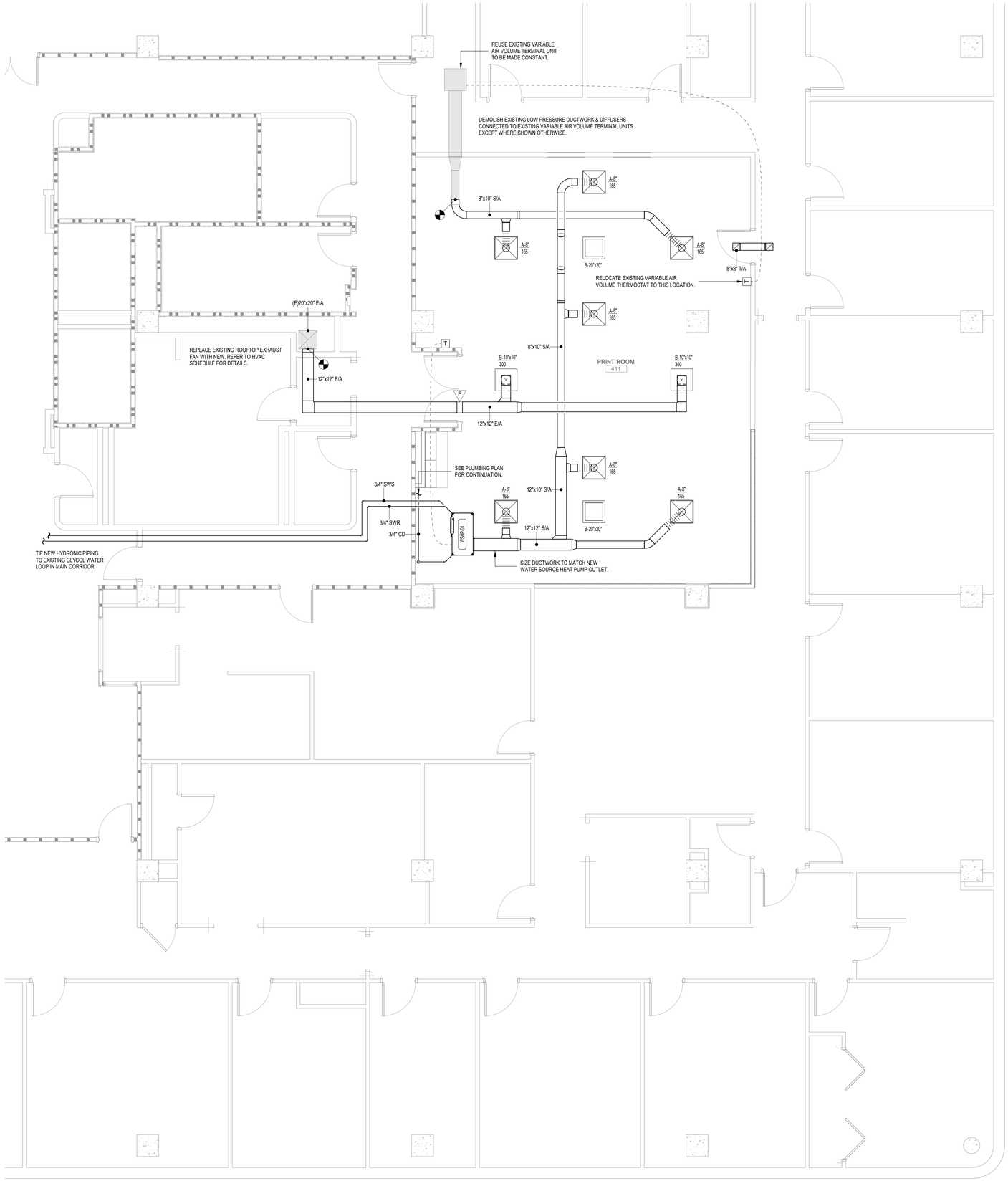

1 LEVEL 4 HVAC PLAN
1/4" = 1'-0"
0 2 4 8

TRUE NORTH
PROJECT NORTH

C:\Autodesk\Revit\2004800 - Mech - SC Education Lottery Upfit - Adjusted Scope - V19.2_cwilkes@ssoe.com.rvt :FILE PATH
10/20/2021 3:21:25 PM :PRINT DATE

PROFESSIONAL SEALS:

SOUTH CAROLINA CERTIFICATE OF AUTHORIZATION SSOE, INC No. 746

SOUTH CAROLINA PROFESSIONAL ENGINEER NO. 25453 WESLEY G. BROWN 5/6/21

CONSULTANTS:

SUBMITTAL/REVISION SCHEDULE:

NO.	DATE	DESCRIPTION
	08.06.2021	CONSTRUCTION DOCUMENTS

■ APPROVED FOR CONSTRUCTION
□ NOT APPROVED FOR CONSTRUCTION

CLIENT INFORMATION:

SOUTH CAROLINA EDUCATION LOTTERY

CLIENT PROJECT #:	20048.00
SCEL PROJECT #:	Y20-N001-CB

PROJECT INFORMATION:

4TH FLOOR UPFIT

1333 MAIN STREET
COLUMBIA, SC 29201

SSOE/SW PROJECT #:	021-00531-00
SSOE/SW MANAGER:	WESLEY BROWN

SSOE | STEVENS & WILKINSON
1501 Main Street, Suite 730
Columbia, SC 29201
T. (803) 765-0320

THIS DRAWING IS THE PROPERTY OF SSOE | STEVENS & WILKINSON. UNAUTHORIZED USE OF AMP AND INCLUDING USE ON OTHER PROJECTS, IS PROHIBITED.
© SSOE, INC. 2021

LEVEL 4 HVAC PLAN

M1.41

NOTES:
1. REFER TO HVAC FLOOR PLANS FOR DUCT SIZES
2. REFER TO SCHEDULES FOR GRILLES, REGISTERS, DIFFUSERS AND TERMINAL SIZES AND TYPES
3. PROVIDE A MANUAL TYPE BALANCING DAMPER FOR EACH SUPPLY OUTLET AND RETURN INLET
4. ALL DUCT RUNOUTS TO DIFFUSERS SHALL BE THE SAME SIZE AS DIFFUSER NECK SIZE, UNLESS OTHERWISE NOTED
5. FLEX DUCT WILL NOT BE ALLOWED ON RETURN OR EXHAUST DUCTWORK SYSTEMS
6. PROVIDE 12" AIR CUSHION AT THE END OF EACH SUPPLY MAIN AND BRANCH DUCT
7. INDIVIDUAL BRANCH BALANCING DAMPERS NOT REQUIRED FOR SUPPLY OR EXHAUST REGISTERS

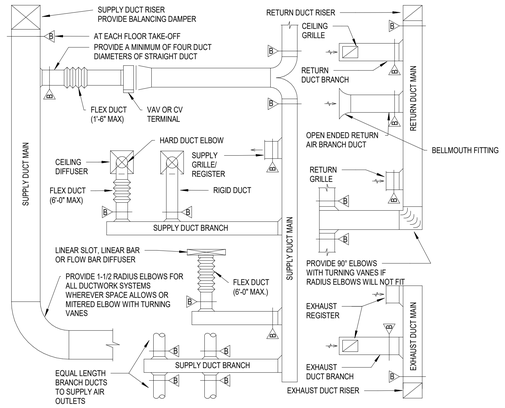

1 DUCTWORK INSTALLATION DIAGRAM
NOT TO SCALE

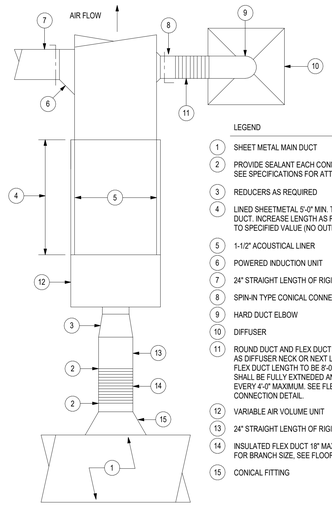

LEGEND

1. SHEET METAL MAIN DUCT
2. PROVIDE SEALANT EACH CONNECTION POINT. SEE SPECIFICATIONS FOR ATTACHMENTS .
3. REDUCERS AS REQUIRED
4. LINED SHEETMETAL 5'-0" MIN. THRU ELLS OR STRAIGHT DUCT. INCREASE LENGTH AS REQ'D. TO REDUCE NOISE TO SPECIFIED VALUE (NO OUTLETS IN THIS SECTION)
5. 1-1/2" ACOUSTICAL LINER
6. POWERED INDUCTION UNIT
7. 24" STRAIGHT LENGTH OF RIGID S/M DUCT
8. SPIN-IN TYPE CONICAL CONNECTION WITH MVD
9. HARD DUCT ELBOW
10. DIFFUSER
11. ROUND DUCT AND FLEX DUCT SAME SIZE AS DIFFUSER NECK OR NEXT LARGER SIZE. FLEX DUCT LENGTH TO BE 8'-0" MAX. DUCT SHALL BE FULLY EXTNEDED AND SUPPORTED EVERY 4'-0" MAXIMUM. SEE FLEXIBLE DUCT CONNECTION DETAIL.
12. VARIABLE AIR VOLUME UNIT
13. 24" STRAIGHT LENGTH OF RIGID S/M DUCT
14. INSULATED FLEX DUCT 18" MAX. LENGTH FOR BRANCH SIZE. SEE FLOOR PLAN.
15. CONICAL FITTING

2 VAV TERMINAL UNIT & DIFFUSER CONNECTION
NOT TO SCALE

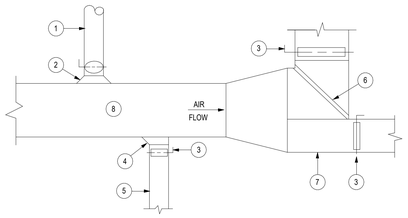

LEGEND

1. ROUND BRANCH DUCT
2. CONICAL SPIN IN (NO SCOOP)
3. MANUAL DAMPER, ALL BRANCHES
4. 45° THROAT
5. RECTANGULAR BRANCH DUCT
6. TURNING VANES, SEE SPECIFICATIONS
7. TRUNK DUCTWORK

3 TYPICAL DUCTWORK BRANCH TAKEOFF
NOT TO SCALE

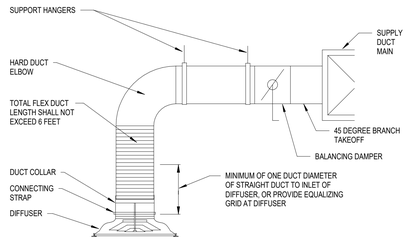

4 DIFFUSER FLEXIBLE DUCT CONNECTION
NOT TO SCALE

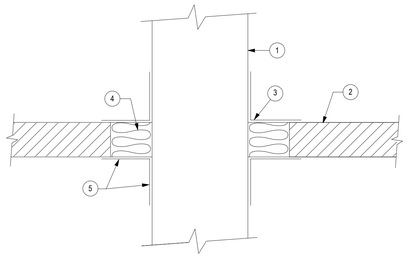

NOTES:

1. DUCT THROUGH FLOORS REQUIRE CONCRETE CURB NOT SHOWN.
2. FIRE WALL OR FLOOR PENETRATION. SEE SPECIFICATIONS FOR FIRE STOPPING AND ACOUSTICAL SEALANT.

LEGEND

1. DUCT
2. WALL, FLOOR, PARTITION, ETC.
3. SHEETMETAL MOUNTING ANGLE ALL AROUND
4. VOID SHALL BE PACKED ALL AROUND WITH MINERAL WOOL BATT
5. SEAL EACH MOUNTING ANGLE ALL AROUND WITH NON-HARDENING SEALANT

5 DUCT THROUGH STRUCTURE
NOT TO SCALE

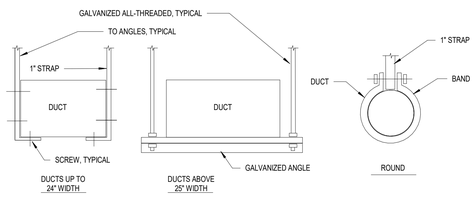

6 DUCTWORK HANGERS
NOT TO SCALE

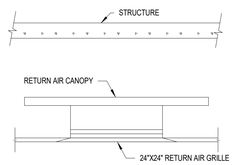

7 PLENUM RETURN AIR GRILLE CANOPY
NOT TO SCALE

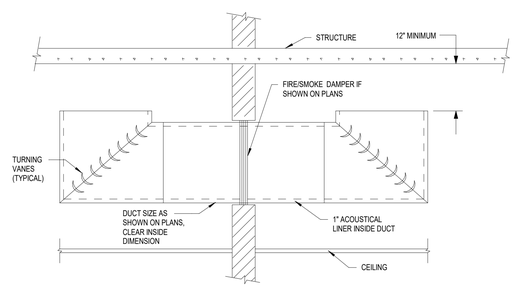

8 PLENUM AIR TRANSFER DUCT
NOT TO SCALE

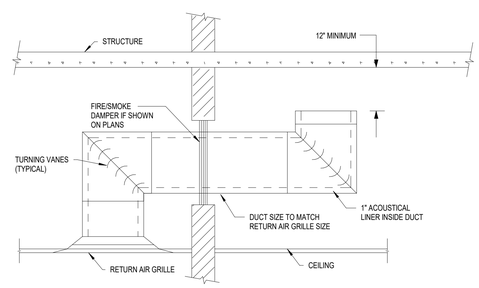

9 PLENUM TRANSFER DUCT WITH RETURN AIR GRILLE
NOT TO SCALE

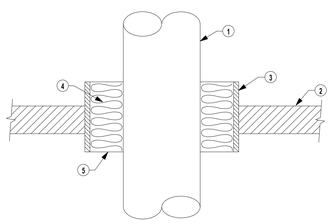

NOTES:

1. PIPES THRU FLOORS REQUIRE CONCRETE CURB NOT SHOWN.
2. FIRE WALL OR FLOOR PENETRATION. SEE SPECIFICATION FOR FIRE STOPPING AND ACOUSTICAL SEALANT.

LEGEND

1. PIPE
2. WALL, FLOOR, PARTITION, ETC.
3. STEEL PIPE SLEEVE
4. VOID SHALL BE PACKED ALL AROUND WITH MINERAL WOOL BATT
5. SEAL EACH MINERAL WOOL SURFACE WITH NON-HARDENING SEALANT MINIMUM 1" DEPTH

10 PIPE THROUGH STRUCTURE
NOT TO SCALE

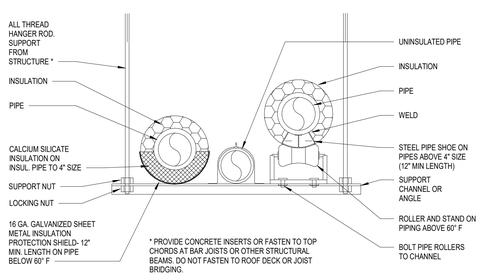

* PROVIDE CONCRETE INSERTS OR FASTEN TO TOP CHORDS AT BAR JOISTS OR OTHER STRUCTURAL BEAMS. DO NOT FASTEN TO ROOF DECK OR JOIST BRIDGING.

11 TRAPEZE PIPE HANGER
NOT TO SCALE

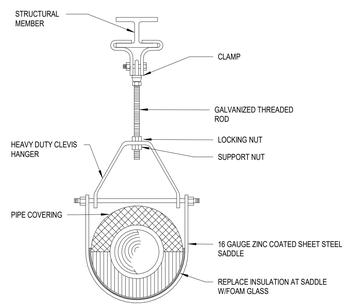

SIZE HANGER AND CLAMP TO ADEQUATELY SUPPORT LOAD (REFER TO MANUFACTURER'S GUIDELINES AND SPECIFICATIONS.)

12 PIPE HANGER
NOT TO SCALE

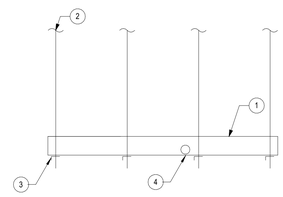

LEGEND

1. DRAIN PAN, 1-1/2" DEEP 18 GAUGE GALVANIZED SHEETMETAL WITH WELDED CORNERS AND SEAMS. SIZED TO COVER AND EXTEND 3" BEYOND THE AREA BELOW UNIT FAN COIL SECTION. PIPING CONNECTIONS AND VALVES.
2. PAN SUPPORTS, SUPPORT INDEPENDENTLY FROM EQUIPMENT.
3. REINFORCING ANGLES, TYP.
4. 3/4" AUXILLARY DRAIN LINE, EXTEND TO NEAREST FLOOR OR HUB DRAIN.

13 DRAIN PAN
NOT TO SCALE

FOR POSITIVE PRESSURE
L= H + J + PIPE DIA. WHERE:
H= 1/2 INCH (MINIMUM)
J= 1/2 INCH PLUS THE UNIT POSITIVE STATIC PRESSURE AT COIL DISCHARGE (LOADED FILTERS)
FOR NEGATIVE PRESSURE
L= H + J + PIPE DIA. WHERE:
H= 1 INCH FOR EACH INCH OF NEGATIVE PRESSURE PLUS 1 INCH.
J= 1/2 H

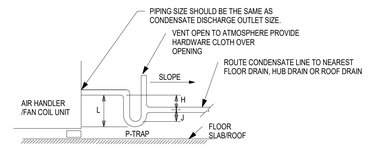

14 CONDENSATE DRAIN PIPING
NOT TO SCALE

ssoe®

S&W

PROFESSIONAL SEALS:

SOUTH CAROLINA CERTIFICATE OF AUTHORIZATION SSOE, INC No. 746

SOUTH CAROLINA PROFESSIONAL ENGINEER NO. 25453 WESLEY G. BROWN 8/6/21

CONSULTANTS:

SUBMITTAL/REVISION SCHEDULE:

NO.	DATE	DESCRIPTION
	08.06.2021	CONSTRUCTION DOCUMENTS

■ APPROVED FOR CONSTRUCTION
□ NOT APPROVED FOR CONSTRUCTION

CLIENT INFORMATION:

SOUTH CAROLINA EDUCATION LOTTERY

South Carolina Education Lottery®

CLIENT PROJECT #:	20048.00
SCEL PROJECT #:	Y20-N001-CB

PROJECT INFORMATION:

4TH FLOOR UPFIT

1333 MAIN STREET
COLUMBIA, SC 29201

SSOE/SW PROJECT #:	021-00531-00
SSOE/SW MANAGER:	WESLEY BROWN

SSOE | STEVENS & WILKINSON
1501 Main Street, Suite 730
Columbia, SC 29201
T. (803) 765-0320

THIS DRAWING IS THE PROPERTY OF SSOE | STEVENS & WILKINSON. UNAUTHORIZED USE OF ANY KIND, INCLUDING USE ON OTHER PROJECTS, IS PROHIBITED.
© SSOE, INC. 2021

HVAC DETAILS

M5.01

C:\Autodesk\Revit\2004800 - Mech - SC Education Lottery Upfit - Adjusted Scope - V19.2_cwilkes@ssoe.com.rvt :FILE PATH
10/20/2021 3:21:27 PM :PRINT DATE

WATER SOURCE HEAT PUMPS

UNIT TAG	MANUFACTURER	MODEL	FAN CHARACTERISTICS			COIL PERFORMANCE					UNIT EFFICIENCY		VOLTAGE / PHASE	NOTES
			AIRFLOW	EXTERNAL STATIC PRESSURE	MOTOR HORSEPOWER	NOMINAL CAPACITY	FLUID FLOW RATE	NET COOLING CAPACITY	NET SENSIBLE CAPACITY	NET HEATING CAPACITY	EER	COP		
			CFM	IN WG	HP	TON	GPM	MBH	MBH	MBH				
WSHP-01	TRANE	DXHF0244	836	0.50	0.33	2.0	3.6	25.1	19.1	31.7	17.7	5.4	460 / 3	1-9

NOTES:
1. PROVIDE WITH SINGLE POINT POWER ELECTRICAL CONNECTION.
2. PROVIDE WITH TWO-STAGE HEATING & COOLING.
3. PROVIDE WITH 2 INCH MERV 8 FILTER.
4. PROVIDE WITH FUSED DISCONNECT SWITCH OR CIRCUIT BREAKER SIZED FOR MAXIMUM OVERCURRENT PROTECTION.
5. PROVIDE WITH FLEXIBLE CONNECTION FOR SUPPLY AIR DUCTWORK.
6. PROVIDE WITH AUXILARY DRAIN PAN & OVERFLOW SWITCH. SET OVERFLOW SWITCH TO SHUT DOWN UNIT AT WATER LEVEL BELOW UNIT.
7. PROVIDE WITH INSULATION FOR HYDRONIC PIPING.
8. PROVIDE WITH HOSE KIT & ASSOCIATED PUMP.
9. PROVIDE WITH 24 VOLT INDEPENDENT CONTROLS.

EXHAUST FANS

UNIT TAG	MANUFACTURER	MODEL	AIRFLOW	TOTAL EXTERNAL STATIC PRESSURE	OPERATING POWER	MOTOR HORSEPOWER	DRIVE TYPE	SONES	VOLTAGE / PHASE	NOTES
			CFM	IN WG	BHP	HP				
EF-10	GREENHECK	GB-200	4000	1.0	1.44	1 1/2	BELT	15.2	460 / 3	1-2

NOTES:
1. PROVIDE WITH MEANS OF DISCONNECT.
2. PROVIDE WITH BACKDRAFT DAMPER.

GRILLES / REGISTERS / DIFFUSERS

SYMBOL	MANUFACTURER	MODEL	MOUNTING	TYPE	FRAME SIZE / TYPE	NECK	FINISH	USE	MATERIAL	NOTES
A	PRICE	SPO	PER ARCHITECTURAL CEILING TYPE	SQUARE PLAQUE DIFFUSER	24"X24"	ROUND	WHITE	SUPPLY	STEEL	1-3
B	PRICE	PDDR	PER ARCHITECTURAL CEILING TYPE	PERFORATED GRILLE	24"X24"	SEE PLAN	WHITE	RETURN / EXHAUST / TRANSFER	STEEL	1-2

NOTES:
1. PROVIDE WITH SQUARE TO ROUND NECK ADAPTER AS NECESSARY.
2. PROVIDE WITH FRAME COMPATIBLE FOR CEILING SYSTEM AS SHOWN ON ARCHITECTURAL REFLECTED CEILING PLAN.
3. PROVIDE WITH MANUFACTURER INSULATED BACKPAN.

PROFESSIONAL SEALS:

SOUTH CAROLINA CERTIFICATE OF AUTHORIZATION SSOE, INC No. 746

SOUTH CAROLINA PROFESSIONAL ENGINEER NO. 25453 WESLEY G. BROWN 5/6/21

CONSULTANTS:

SUBMITTAL/REVISION SCHEDULE:

NO.	DATE	DESCRIPTION
	08.06.2021	CONSTRUCTION DOCUMENTS

■ APPROVED FOR CONSTRUCTION
□ NOT APPROVED FOR CONSTRUCTION

CLIENT INFORMATION:

SOUTH CAROLINA EDUCATION LOTTERY

CLIENT PROJECT #:	20048.00
SCEL PROJECT #:	Y20-N001-CB

PROJECT INFORMATION:

4TH FLOOR UPFIT

1333 MAIN STREET
COLUMBIA, SC 29201

SSOE/SW PROJECT #:	021-00531-00
SSOE/SW MANAGER:	WESLEY BROWN

SSOE | STEVENS & WILKINSON
1501 Main Street, Suite 730
Columbia, SC 29201
T. (803) 765-0320

THIS DRAWING IS THE PROPERTY OF SSOE | STEVENS & WILKINSON. UNAUTHORIZED USE OF ANY KIND, INCLUDING USE ON OTHER PROJECTS, IS PROHIBITED.
© SSOE, INC. 2021

HVAC SCHEDULES

M6.01

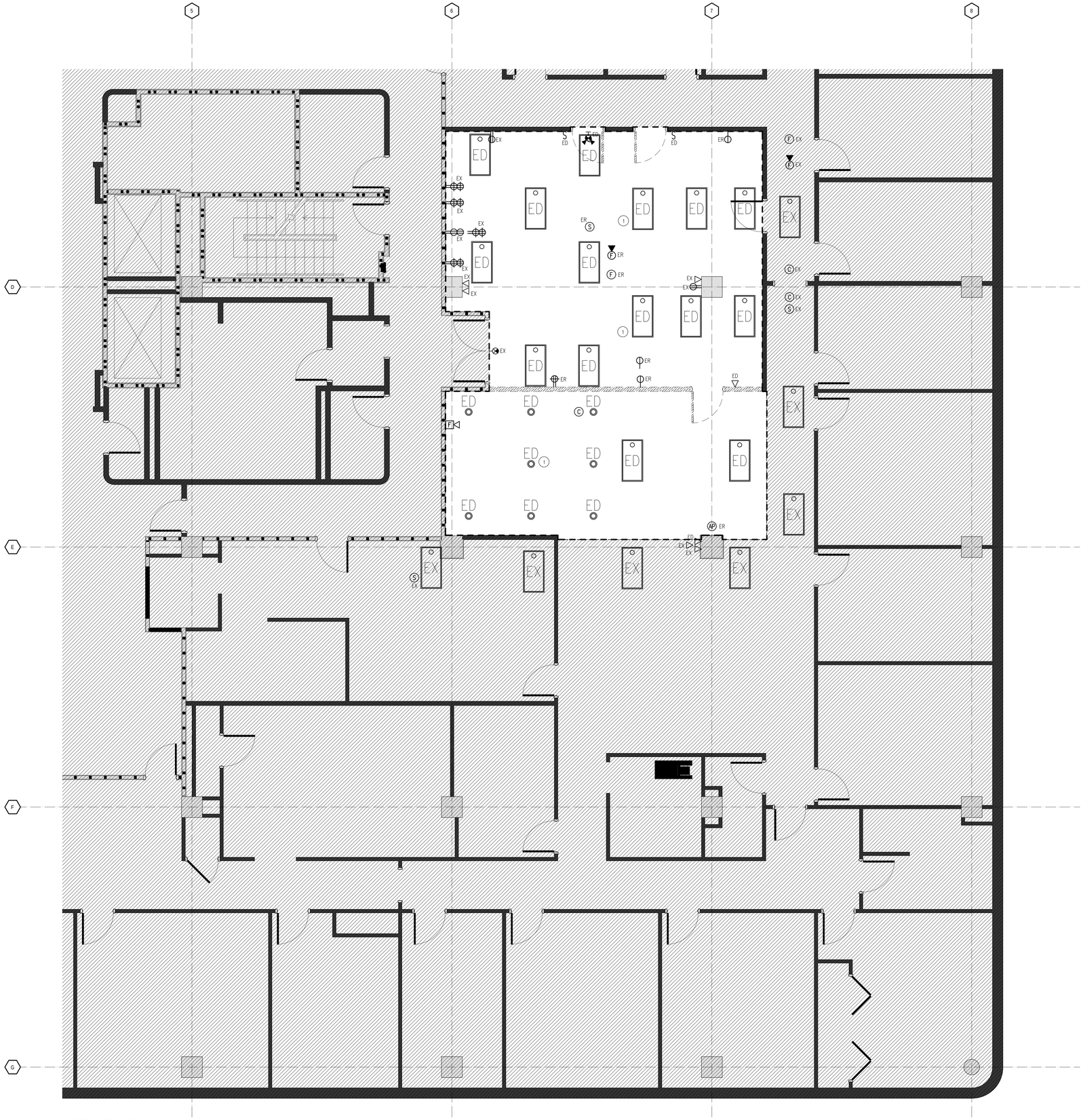

1 ELECTRICAL DEMOLITION
LEVEL 4 FLOOR PLAN
1/4" = 1'-0"

DEMOLITION GENERAL NOTES

A. THE PURPOSE AND INTENT OF ALL DEMOLITION SHEETS IS TO SHOW THE ELECTRICAL CONTRACTOR, DEVICES REQUIRED TO BE REMOVED OR TO REMAIN FOR SUCCESSFUL COMPLETION OF THE DEMOLITION REQUIREMENTS, BUT IS IN NO WAY LIMITED TO THE DEVICES SHOWN. ALL BIDDERS ARE REQUIRED TO MAKE AN ON-SITE VISIT AND INSPECT EXISTING PANELS, DEVICES, ABOVE CEILING INSPECTIONS AND CIRCUIT REQUIREMENTS BEFORE FINAL BID DATE. COORDINATE ANY POWER DOWN TIMES. ANY ADDITIONAL WORK REQUIRED OR CLARIFICATIONS TO THE WORK SHOWN THAT COULD HAVE BEEN REASONABLY VERIFIED BY THE SURVEY SHALL BE THE RESPONSIBILITY OF THE CONTRACTOR.

B. MECHANICALLY AND ELECTRICALLY SECURE ALL ELECTRICAL CONDUIT AND CONDUCTORS WHICH ARE ABANDONED. ABANDONED WIRING SHALL BE REMOVED BACK TO THE OVERCURRENT DEVICE WHICH PROTECTS IT. ABANDONED CONDUIT SHALL BE REMOVED BACK TO THE POINT OF CONCEALMENT. EXISTING ELECTRICAL OUTLETS NOT SHOWN AS BEING ABANDONED OR REMOVED SHALL BE RECONNECTED AS REQUIRED. ALL ELECTRICAL DEVICES TO REMAIN SHALL BE INSPECTED, CLEANED AND REPAIRED OR REPLACED AS NECESSARY.

C. REROUTE AND EXTEND CIRCUITS TO EXISTING DEVICES, AS REQUIRED TO MAINTAIN CONTINUITY OF POWER AND GROUNDING. RECONNECT CIRCUITS TO LOADS IN OTHER AREAS OF THE BUILDING OR SITE WHICH ARE AFFECTED BY DEMOLITION WORK.

D. PERFORM ALL CUTTING AND DRILLING REQUIRED. PATCH ALL HOLES, PAINT AND OTHERWISE REPAIR ALL DAMAGES TO THE BUILDING STRUCTURE AND SURFACES WHICH OCCUR AS A RESULT OF THIS PROJECT. REPAIRS SHALL RESTORE THE STRUCTURE TO THE SAME CONDITION EXISTING PRIOR TO BEGINNING WORK.

E. ANY DAMAGE TO EXISTING CONDITIONS CAUSED BY DEMOLITION AND/OR NEW WORK SHALL BE REPAIRED AS DETAILED, BY THE CONTRACTOR RESPONSIBLE FOR THE DAMAGE.

F. ANY NEW OR EXISTING PIPING, PASSING THROUGH A NEW OR EXISTING WALL CARRYING A FIRE RATING SHALL BE SEALED TIGHT TO THE WALL WITH A UL APPROVED METHOD. ALL DEMOLITION SHALL BE PERFORMED TO PREVENT THE ARBITRARY DESTRUCTION OR INTERRUPTION OF CONCEALED UTILITIES WHICH ARE INTENDED TO REMAIN IN USE AND THE ROUTING OF WHICH CAN NOT BE PREDETERMINED UNTIL DEMOLITION IS STARTED. ALL SUCH DISCOVERIES OF UTILITIES WHICH ARE IN A DIFFERENT LOCATION FROM THAT INDICATED, CHANGE DIRECTION FROM FLOOR-TO-FLOOR, ETC. OR ARE UNIDENTIFIED, SHALL BE REPORTED TO THE ARCHITECT BEFORE REMOVAL OR DISTURBANCE.

G. DISCONNECT, DEMOLISH, AND REMOVE WORK INDICATED OR SPECIFIED.

H. WHERE CONDUIT, WIRE, OR ELECTRICAL DEVICES TO REMAIN ARE DAMAGED OR DISTURBED, REMOVE DAMAGED PORTIONS AND INSTALL NEW PRODUCTS OF EQUAL CAPACITY AND QUALITY.

I. REMOVE, STORE, CLEAN, REINSTALL, RECONNECT, AND MAKE OPERATIONAL EQUIPMENT INDICATED FOR RELOCATION.

DEMOLITION PLAN LEGEND

- AREA NOT INCLUDED IN PROJECT SCOPE.
- EXISTING CONSTRUCTION TO BE REMOVED
- EXISTING CONSTRUCTION TO REMAIN

DEMOLITION PLAN KEY NOTES:

1. EXISTING LIGHTING FIXTURES TO BE DEMOED AS INDICATED AND RETURNED TO THE OWNER. EXISTING NORMAL AND EMERGENCY LIGHTING CIRCUITS TO BE REUSED FOR NEW RENOVATION. MAINTAIN INTEGRITY OF EXISTING LIGHTING CIRCUITS TO REMAIN. TYPICAL FOR LIGHT FIXTURES WITH THE SUBSCRIPT "ED".
2. EXISTING LIGHTING FIXTURES TO BE RELOCATED AS INDICATED. SEE RENOVATION LIGHTING PLAN FOR NEW LOCATION. EXISTING LIGHTING CIRCUIT TO BE EXTENDED TO NEW LOCATION AS REQUIRED, 0.75"C., 2#12, #12 GND. TYPICAL FOR LIGHT FIXTURES WITH SUBSCRIPT "ER".
3. EXISTING LIGHTING FIXTURES TO REMAIN. TYPICAL FOR LIGHT FIXTURES WITH SUBSCRIPT "EX".
4. EXISTING POWER RECEPTACLES TO BE DEMOED AS INDICATED. EXISTING RECEPTACLE CIRCUIT TO REMAIN AND BE REUSED FOR NEW RENOVATION. MAINTAIN INTEGRITY OF EXISTING RECEPTACLE CIRCUITS TO REMAIN. TYPICAL FOR RECEPTACLES WITH SUBSCRIPT "ED".
5. EXISTING POWER RECEPTACLES TO BE RELOCATED AS INDICATED. SEE RENOVATION POWER AND COMMUNICATIONS PLAN FOR NEW LOCATION. EXISTING RECEPTACLE CIRCUIT TO BE EXTENDED TO NEW LOCATION AS REQUIRED, 0.75"C., 2#12, #12 GND. TYPICAL FOR RECEPTACLES WITH SUBSCRIPT "ER".
6. EXISTING POWER RECEPTACLES TO REMAIN. TYPICAL FOR RECEPTACLES WITH SUBSCRIPT "EX".
7. EXISTING CEILING TO BE REMOVED AND REPLACED WITH NEW CEILING FOR RENOVATION. ALL EXISTING CEILING MOUNTED DEVICES (FIRE ALARM SYSTEM DEVICES, PAGING SYSTEM SPEAKERS, SECURITY ALARM CAMERAS, ETC.) TO BE PROTECTED IN PLACE FOR REINSTALLATION IN NEW CEILING. EXTEND SYSTEM CIRCUITS TO NEW LOCATION AS REQUIRED. TYPICAL FOR DEVICES WITH SUBSCRIPT "EX".

ssoe®

S&W

PROFESSIONAL SEALS:

SOUTH CAROLINA SSOE, INC No. 746 CERTIFICATE OF AUTHORIZATION

SOUTH CAROLINA PROFESSIONAL ENGINEER No. 16536 BRIAN K. BRAHIM 8/06/21

SUBMITTAL/REVISION SCHEDULE:

NO.	DATE	DESCRIPTION
	8.06.2021	CONSTRUCTION DOCUMENTS

■ APPROVED FOR CONSTRUCTION
□ NOT APPROVED FOR CONSTRUCTION

CLIENT INFORMATION:

SOUTH CAROLINA EDUCATION LOTTERY

South Carolina Education Lottery®

CLIENT PROJECT #:	20048.00
JHA PROJECT #:	Y20-N001-C8

PROJECT INFORMATION:

4TH FLOOR UPFIT

1333 MAIN STREET, COLUMBIA, SOUTH CAROLINA

SSOE/SW PROJECT #:	021-00531-00
SSOE/SW MANAGER:	BILL FLEMING

SSOE | STEVENS & WILKINSON
1501 Main Street, Suite 730
Columbia, SC 29201
T. (803) 765-0320

THIS DRAWING IS THE PROPERTY OF SSOE | STEVENS & WILKINSON. UNAUTHORIZED USE OF ANY KIND, INCLUDING USE ON OTHER PROJECTS, IS PROHIBITED.

© SSOE, INC. 2021

ELECTRICAL DEMOLITION
LEVEL 4 FLOOR PLAN

ED1.41

GENERAL ELECTRICAL NOTES

1. DRAWINGS SHOWING ELECTRICAL WORK ARE DIAGRAMMATIC. REFER TO ARCHITECTURAL AND STRUCTURAL DRAWINGS FOR GUIDANCE AS TO DIMENSIONS, CEILING HEIGHTS, DOOR SWINGS AND FINISHES.
2. COORDINATE ELECTRICAL WORK WITH OTHER DISCIPLINES. REFER TO MECHANICAL AND PLUMBING DRAWINGS FOR LOCATIONS OF EQUIPMENT, PIPES AND DUCTWORK.
3. INSTALL THE ELECTRICAL SYSTEMS SO AS NOT TO INTERFERE WITH OTHER SYSTEMS. PROVIDE ADDITIONAL STEEL SUPPORTS FOR MOTOR CONTROLLERS, FIXTURES, RACEWAYS, CABINETS, BOXES, AND THE LIKE WHERE THE BUILDING, EQUIPMENT OR STRUCTURE IS NOT SUITABLE FOR MOUNTING SAME DIRECTLY THEREON.
4. "PROVIDE" USED IN THE SPECIFICATIONS AND DRAWINGS SHALL MEAN "TO FURNISH, INSTALL, CONNECT AND PLACE IN SERVICE COMPLETELY IN THE SPECIFIED OR APPROVED MANNER THE ITEM DESCRIBED."
5. ELECTRICAL WORK EMBEDDED IN CONCRETE OR OTHERWISE PERMANENTLY CONCEALED SHALL NOT BE COVERED UNTIL INSPECTED BY THE OWNER'S REPRESENTATIVE.
6. ALL PENETRATIONS THROUGH FIRE RESISTANT WALLS AND OTHER SUCH RATED ASSEMBLIES SHALL BE FIRESTOPPED TO MAINTAIN ITS RATING.
7. GROUNDING EQUIPMENT CONDUCTORS SHALL BE PROVIDED FOR ALL BRANCH CIRCUITS AND FEEDERS.
8. PROVIDE EXPANSION JOINT FITTINGS ON ALL CONDUITS THAT CROSS EXPANSION JOINTS OR CONDUITS THAT PENETRATE WALLS WITH SEISMIC BRACING. SEE ARCHITECTURAL DRAWINGS.
9. COORDINATE WITH ARCHITECT AND OWNER'S CRITERIA OUTLET DEVICE COVERPLATE MATERIAL AND FINISH AND DEVICE COLOR FOR THE APPLIED VOLTAGE AND SYSTEM.
10. PROVIDE POWER, CONNECTIONS AND DISCONNECTING MEANS TO ALL HVAC AND PLUMBING EQUIPMENT WHETHER IT IS INDICATED ON THE DIVISION 26 DOCUMENTS OR NOT. THIS SHALL INCLUDE BUT IS NOT LIMITED TO, DUCT DETECTORS, SMOKE AND FIRE/SMOKE DAMPERS, AUTOMATIC FLUSH VALVES, AUTOMATIC SINK AND URINAL CUT OFF VALVES. COORDINATE REQUIREMENTS, QUANTITIES AND LOCATIONS WITH DIVISIONS 22 & 23 FOR A COMPLETE INSTALLATION. IF QUANTITIES SHOWN ON DIVISION 26 DOCUMENTS ARE DIFFERENT THAN THOSE SHOWN ON DIVISION 22 & 23 DOCUMENTS THEN DIVISION 22 & 23 DOCUMENTS SHALL GOVERN.
11. BRANCH CIRCUIT CONDUCTORS SHALL BE ADJUSTED TO COMPENSATE FOR VOLTAGE DROP PER VOLTAGE DROP TABLE.
12. REFER TO "TYPICAL MOUNTING AND ALIGNMENT CRITERIA" DETAIL FOR OUTLET DEVICE MOUNTING HEIGHT AND LOCATIONS.
13. IN NEW WALLS, ALL WALL MOUNTED DEVICES SHALL BE FULLY RECESSED. IN EXISTING WALLS, SURFACE MOUNTED RACEWAY MAY BE USED FOR WALL MOUNTED DEVICES.
14. CONSTRUCTION WILL BE COMPLETED IN PHASES. SEE ARCHITECTURAL PHASING PLAN AND SPECIFICATIONS FOR REQUIREMENTS.

GENERAL ELECTRICAL DEMOLITION NOTES

1. DEMOLITION, AS SHOWN OR NOTED ON THE ARCHITECT'S PLANS IS BASED ON EXISTING DRAWINGS AND LIMITED FIELD INVESTIGATION. REFER TO ARCHITECT'S DEMOLITION PLANS FOR AREAS OF DEMOLITION.
2. THE CONTRACTOR SHALL REMOVE THE EXISTING ELECTRICAL WORK NECESSARY TO PROVIDE THE INTENDED ARRANGEMENT OF WALLS AND CELINGS, AND SHALL RECONNECT ALL CIRCUITS INTERRUPTED BY THIS DEMOLITION WHERE THOSE CIRCUITS ARE UTILIZED BEYOND THE DEMOLITION, WHETHER SUCH CIRCUITS ARE INDICATED OR NOT.
3. COORDINATE DEMOLITION WORK SHOWN ON THE ARCHITECT'S DRAWINGS. REFER TO THE ARCHITECTS AND MECHANICAL PLANS IF PRESENT FOR AREAS AND EQUIPMENT TO BE DEMOLISHED.
4. WHERE AN ELECTRICAL DEVICE THAT IS TO BE REMOVED IS AN "END OF LINE" OR A SINGLE DEVICE, THE CONDUCTORS SHALL BE DISCONNECTED AT THE NEXT UPSTREAM DEVICE TO REMAIN OR AT ITS RELATED PANELBOARD. ALL NON-FUNCTIONAL CONDUCTORS INCLUDING POWER AND TELECOMMUNICATION CABLES SHALL BE REMOVED.
5. DEMOLITION: ACCURACY OF ORIGINAL PLANS HAS NOT BEEN VERIFIED. THE CONTRACTORS SHALL MAINTAIN CIRCUIT CONTINUITY OF ALL EXISTING FIXTURES AND DEVICES THAT ARE TO REMAIN.
6. DISCONNECTED ITEMS THAT ARE TO REMAIN SHALL BE RECONNECTED TO THEIR RESPECTIVE PANELBOARDS AND SHALL BE TESTED FOR PROPER FUNCTIONALITY AT THE COMPLETION OF THE DEMOLITION WORK. REMOVE, STORE, CLEAN, REINSTALL, RECONNECT, AND MAKE OPERATIONAL EQUIPMENT INDICATED FOR RELOCATION.
7. EXISTING CIRCUITS, IF INDICATED, ARE DIAGRAMMATIC ONLY. VERIFY EXACT CONDUIT LOCATION AND ROUTING OF EXISTING CONDUIT RUNS AND NUMBER OF CONDUCTORS. AND PROVIDE ADDITIONAL CONDUITS / CONDUCTORS AS NECESSARY TO ACCOMPLISH THE DESIGN INTENT.
8. CIRCUIT BREAKERS ADDED TO THE EXISTING PANELBOARDS SHALL MATCH THE EXISTING BREAKER TYPE, MANUFACTURER AND AIC RATING. PROVIDE NEW TYPED, UPDATED DIRECTORIES IN THE EXISTING PANELBOARDS TO REFLECT CHANGES MADE BY THIS RENOVATION.
9. ALL ADDITIONS TO SYSTEMS SHALL MATCH THE MANUFACTURER'S EXISTING SYSTEMS PRESENTLY INSTALLED IN THE FACILITY UNLESS OTHERWISE NOTED.
10. EXISTING SYSTEMS SHALL REMAIN UNLESS NOTED FOR REMOVAL OR RELOCATION. ALL SYSTEMS SHALL BE CHECKED TO ENSURE THEY ARE IN PROPER WORKING ORDER BEFORE ANY DEMOLITION IS STARTED. SYSTEMS NOT FOUND TO BE IN SATISFACTORY WORKING CONDITION SHALL BE REPORTED TO THE OWNER IN WRITING PRIOR TO THE START OF ANY DEMOLITION ALL SYSTEMS SHALL BE CHECKED TO ENSURE THAT THEY ARE WORKING PROPERLY AFTER THE DEMOLITION WORK IS FINISHED AND AFTER THE NEW ELECTRICAL INSTALLATION IS COMPLETE.
11. PERFORM ALL CUTTING AND DRILLING REQUIRED. PATCH ALL HOLES, PAINT AND OTHERWISE REPAIR ALL DAMAGES TO THE BUILDING STRUCTURE AND SURFACES WHICH OCCUR AS A RESULT OF THIS PROJECT. REPAIRS SHALL RESTORE THE STRUCTURE TO THE SAME CONDITION EXISTING PRIOR TO BEGINNING WORK.
12. ANY DAMAGE TO EXISTING CONDITIONS CAUSED BY DEMOLITION AND/OR NEW WORK SHALL BE REPAIRED AS DETAILED BY THE CONTRACTOR RESPONSIBLE FOR THE DAMAGE.
13. THE PURPOSE AND INTENT OF ALL DEMOLITION SHEETS IS TO SHOW THE ELECTRICAL CONTRACTOR, DEVICES REQUIRED TO BE REMOVED OR TO REMAIN FOR SUCCESSFUL COMPLETION OF THE DEMOLITION REQUIREMENTS, BUT IS IN NO WAY LIMITED TO THE DEVICES ALL BIDDERS ARE REQUIRED TO MAKE AN ON-SITE VISIT AND INSPECT EXISTING PANELS, DEVICES, ABOVE CEILING INSPECTIONS AND CIRCUIT REQUIREMENTS BEFORE FINAL BID COORDINATE ANY POWER DOWN TIMES. ANY ADDITIONAL WORK REQUIRED OR CLARIFICATIONS TO THE WORK SHOWN THAT COULD HAVE BEEN REASONABLY VERIFIED BY THE SURVEY SHALL BE THE RESPONSIBILITY OF THE CONTRACTOR.

ELECTRICAL DEMOLITION LEGEND

ED	EXISTING CONDUIT AND WIRE TO BE DEMOLISHED.
EX	EXISTING CONDUIT AND WIRE TO REMAIN.
EA	EXISTING CONDUIT TO BE ABANDONED, WIRE TO BE REMOVED.
EX	EXISTING DEVICE TO REMAIN.
ENL	EXISTING DEVICE NEW LOCATION.
ER	EXISTING DEVICE TO BE RELOCATED.
EN	EXISTING DEVICE TO BE REPLACED WITH NEW DEVICE.
ED	EXISTING DEVICE TO BE DEMOLISHED.

NOTES:
1. ELECTRICAL DEVICES NOT SCHEDULED TO BE REMOVED, ABANDONED, OR RELOCATED SHALL REMAIN. CONTRACTOR SHALL FIELD VERIFY EXISTING CONDITIONS.

ELECTRICAL SYMBOL SCHEDULE

GLA-1,3,5	CIRCUIT HOMERUN TO PANELBOARD SHOWN LABELED WITH PANELBOARD DESIGNATION AND CIRCUIT NUMBER. UNLESS OTHERWISE NOTED, CONDUIT SHALL BE MINIMUM 3/4" WITH #12 WIRING FOR THE NUMBER OF CIRCUITS INDICATED. BOND THE EQUIPMENT GROUNDING CONDUCTOR TO EVERY PULL BOX AND TO EVERY JUNCTION BOX THROUGH WHICH IT PASSES.
— — — — — —	RACEWAY CONCEALED IN WALLS, CEILINGS, BELOW SLAB, CHASES OR OTHER BUILDING ELEMENTS.

RECEPTACLES SYMBOL SCHEDULE

	RECEPTACLE SUBSCRIPTS SUBSCRIPT "+72" DENOTES MOUNTING HEIGHT, (IE 72" AFF).
	DUPLEX RECEPTACLE, FLUSH MOUNTED. 18" AFF.
	DUPLEX RECEPTACLE, FLUSH MOUNTED 6" ABOVE COUNTERTOP BACKSPLASH OR 42" AFF IF NO COUNTER UNLESS OTHERWISE NOTED.
	GFCI DUPLEX RECEPTACLE, FLUSH MOUNTED. 18" AFF UNLESS OTHERWISE NOTED.
	EMERGENCY POWER DUPLEX RECEPTACLE, FLUSH MOUNTED. 18" AFF.
	GFCI DUPLEX RECEPTACLE, FLUSH MOUNTED 6" ABOVE COUNTERTOP BACKSPLASH OR 42" AFF IF NO COUNTER UNLESS OTHERWISE NOTED. SUBSCRIPT "DF" DENOTES DEADFRONT GFCI DEVICE (PASS & SEYMOOUR 2085 SERIES OR EQUAL)
	DOUBLE DUPLEX RECEPTACLE, FLUSH MOUNTED. 18" AFF.
	DOUBLE DUPLEX RECEPTACLE, FLUSH MOUNTED 6" ABOVE COUNTERTOP BACKSPLASH OR 42" AFF IF NO COUNTER UNLESS OTHERWISE NOTED.

COMMUNICATIONS SYMBOL SCHEDULE

	TELE-COMMUNICATIONS WALL OUTLET, FLUSH MOUNTED 18" AFF. PROVIDE 1-1/4"C FROM EACH OUTLET BOX STUBBED TO ACCESSIBLE CEILING SPACE UNLESS OTHERWISE NOTED. EACH OUTLET BOX SHALL BE 4"x4"x2-5/8" WITH 1GPR.
	TELE-COMMUNICATIONS WALL OUTLET, FLUSH MOUNTED 6" ABOVE COUNTERTOP BACKSPLASH OR 42"AFF UNLESS OTHERWISE NOTED. PROVIDE 1-1/4"C FROM EACH OUTLET BOX STUBBED TO ACCESSIBLE CEILING SPACE UNLESS OTHERWISE NOTED. EACH OUTLET BOX SHALL BE 4"x4"x2-5/8" WITH 1GPR.
AP	TELE-COMMUNICATIONS WIRELESS ACCESS POINT, CEILING MOUNTED. EACH OUTLET BOX SHALL BE 4"x4"x2-5/8" WITH 1GPR.
S	PAGING SYSTEM SPEAKER FLUSH CEILING MOUNTED, FURNISHED BY OWNER. PROVIDE BACKBOX WITH 0.75"C. RUN TO NEAREST EXISTING PAGING SYSTEM SPEAKER.

LIGHT FIXTURE SYMBOL SCHEDULE

AA	LIGHTING FIXTURE. UPPERCASE LETTER INDICATES FIXTURE TYPE. SEE LIGHT FIXTURE SCHEDULE FOR DESCRIPTION. LOWERCASE LETTER INDICATES LIGHTING CONTROL ZONE. SUBSCRIPT N DENOTES THE FIXTURE TO BE WIRED UNSWITCHED. HALF-SHADED FIXTURE INDICATES FIXTURE SHALL BE CONNECTED TO EMERGENCY LIFE SAFETY LIGHTING BRANCH CIRCUIT.
AA	WALL MOUNTED LIGHT FIXTURE. UPPERCASE LETTER INDICATES FIXTURE TYPE. SEE LIGHT FIXTURE SCHEDULE FOR DESCRIPTION. LOWERCASE LETTER INDICATES LIGHTING CONTROL ZONE. SUBSCRIPT N DENOTES THE FIXTURE TO BE WIRED UNSWITCHED. HALF-SHADED FIXTURE INDICATES FIXTURE SHALL BE CONNECTED TO EMERGENCY LIFE SAFETY LIGHTING BRANCH CIRCUIT.

SWITCHES/LIGHTING CONTROLS SYMBOL SCHEDULE

S_b	TOGGLE SWITCH, SPST ["b" DENOTES FIXTURE CONTROLLED (TYPICAL FOR ALL SWITCHES AND DIMMERS)].
S_M	TOGGLE SWITCH SERVING SMALL MECHANICAL LOADS. COORDINATE VOLTAGE AND SWITCH TYPE WITH MECHANICAL LOAD SERVED.
S_{Da}	DIGITAL WALL DIMMER. HUBBELL NXSW-ORLO, WATTSTOPPER #LMDM SERIES. "a" DENOTES FIXTURE CONTROLLED. ROUTE 3/4"C. WITH WIRE PER MANUFACTURER TO ROOM CONTROLLER.
	DIGITAL OCCUPANCY/VACANCY SENSOR. CEILING MOUNTED. DUAL TECHNOLOGY SENSOR. CONNECT TO ROOM CONTROLLER. DUAL TECHNOLOGY HUBBELL NXOS-OMDT2, WATT STOPPER #LMDC-100

SECTION 26000 – ELECTRICAL SPECIFICATIONS

GENERAL:

THE ELECTRICAL CONTRACTOR SHALL PROVIDE ALL WORK, EQUIPMENT, SERVICES, LABOR, AND MATERIALS FOR THE INSTALLATION OF COMPLETE AND FUNCTIONAL ELECTRICAL SYSTEMS AS SPECIFIED, SHOWN, OR IMPLIED HEREIN AND ON THE ASSOCIATED DRAWINGS. THE DRAWINGS ARE DIAGRAMMATIC AND ARE NOT INTENDED TO INCLUDE EVERY DETAIL OF CONSTRUCTION, MATERIALS, AND EQUIPMENT. TAKE FINISH DIMENSIONS AT THE JOB SITE IN PREFERENCE TO SCALING DIMENSIONS.

REVIEW THE CONSTRUCTION DOCUMENTS OF ALL TRADES AND COORDINATE WORK WITH THE OTHER TRADES AS NECESSARY TO AVOID CONFLICTS AND INTERFERENCE. THE CONTRACTOR (HENCE FORTH MEANING THE ELECTRICAL CONTRACTOR) SHALL VISIT THE SITE OF PROPOSED CONSTRUCTION AND SHALL THOROUGHLY FAMILIARIZE HIMSELF WITH ALL EXISTING FIELD CONDITIONS AND VERIFY ALL ASPECTS OF THE PROPOSED WORK AS DESCRIBED OR IMPLIED BY THE CONTRACT DOCUMENTS. THE CONTRACTOR SHALL NOT BE COMPENSATED OR REIMBURSED FOR WORK NOT NECESSARILY SHOWN ON THE CONTRACT DOCUMENTS THAT COULD HAVE REASONABLY BEEN VERIFIED BY A SITE VISIT.

ALL WORK AND MATERIALS SHALL BE IN COMPLIANCE WITH APPLICABLE NATIONAL, STATE, AND LOCAL CODES. COMPLIANCE WITH THE LATEST EDITIONS OF THE NATIONAL ELECTRICAL CODE (NEC) AND OCCUPATIONAL SAFETY AND HEALTH ADMINISTRATION (OSHA) REQUIREMENTS SHALL SERVE AS THE ABSOLUTE MINIMUM STANDARDS. THE REGULATIONS OF THE LOCAL UTILITY SHALL GOVERN SERVICE CONNECTIONS AND METERING PROVISIONS. THE CONTRACTOR SHALL OBTAIN AND PAY FOR ANY AND ALL REQUIRED, PERMITS, INSPECTIONS, CERTIFICATES OF INSPECTIONS AND APPROVAL, AND THE LIKE, AND DELIVER SUCH CERTIFICATES TO THE ARCHITECT. THE ARCHITECT SHALL BE NOTIFIED OF ALL INSPECTION REQUESTS AT THE SAME TIME AS THE INSPECTION AUTHORITY.

LOCATIONS INDICATED FOR OUTLETS EQUIPMENT, ETC., ARE APPROXIMATE AND SHALL BE VERIFIED BY INSTRUCTION ON THE DRAWINGS OR CONSULTATION WITH THE OWNER. ALL ELECTRICAL EQUIPMENT SHALL BE INSTALLED SO THAT ALL CODE REQUIRED AND MANUFACTURED RECOMMENDED SERVICE CLEARANCES ARE MAINTAINED. THE CONTRACTOR SHALL BE RESPONSIBLE FOR ALL CUTTING AND PATCHING NECESSARY FOR THE PROPER INSTALLATION OF HIS WORK. HE SHALL BE RESPONSIBLE FOR ANY DAMAGE DONE BY HIMSELF OR HIS WORKMEN AND SHALL BE RESPONSIBLE FOR REPAIR OF SUCH DAMAGE.

ALL MATERIALS SHALL BE NEW AND SHALL BE LISTED AND LABELED BY THE UNDERWRITER'S LABORATORIES (UL), FOR THE USE INTENDED. PROVIDE NEMA 1 ENCLOSURES FOR ELECTRICAL APPARATUS INSTALLED IN INTERIOR LOCATIONS AND NEMA 3R OR WEATHERPROOF ENCLOSURES FOR ELECTRICAL APPARATUS INSTALLED IN EXTERIOR LOCATIONS OR LOCATIONS OTHERWISE SUBJECT TO WEATHER OR MOISTURE.

SHOP DRAWINGS AND CATALOG DATA SHALL BE SUBMITTED IN SIX COPIES. SUBMIT SHOP DRAWINGS AND CATALOG DATA FOR PANELBOARDS AND ALL SPECIAL SYSTEMS. SUBMIT BATTERY CALCULATIONS FOR ALL FIRE ALARM SYSTEM MODIFICATIONS. SUBMIT CATALOG DATA ONLY FOR DISCONNECT SWITCHES, STARTERS, LIGHT FIXTURES, WIRES AND CABLES, RACEWAYS, AND WIRING DEVICES. ALL APPROVALS FOR SUBSTITUTIONS MUST BE OBTAINED BY THE CONTRACTOR TEN CALENDAR DAYS PRIOR TO BID DATE.

A COMPLETE TEST OF ALL EQUIPMENT FURNISHED, INSTALLED, OR PROVIDED UNDER THIS CONTRACT SHALL BE PROVIDED BY THE CONTRACTOR. TESTING SHALL BE DONE IN ACCORDANCE WITH ALL LOCAL, STATE, AND NATIONAL CODES. THE CONTRACTOR SHALL WARRANT ALL MATERIALS, EQUIPMENT, AND WORKMANSHIP SHOWN OR IMPLIED BY THESE DOCUMENTS TO BE FREE OF DEFECTS FOR A PERIOD OF ONE YEAR FROM THE DATE OF FINAL ACCEPTANCE. IF WITHIN ONE YEAR OF THE DATE OF FINAL ACCEPTANCE ANY WORKMANSHIP, MATERIALS OR EQUIPMENT IS FOUND TO BE FAULTY OR DEFECTIVE THE CONTRACTOR SHALL CORRECT IT PROMPTLY AT NO COST TO THE OWNER. THE CONTRACTOR SHALL OBTAIN A SIGNED AND NOTARIZED INSPECTION CERTIFICATE OF HIS WORK FROM THE LOCAL BUILDING INSPECTOR AND PRESENT IT TO THE ARCHITECT BEFORE WORK WILL BE APPROVED FOR FINAL PAYMENT.

DEMOLITION:

THE DEMOLITION PLANS AND/OR REFERENCES ARE INTENDED TO SHOW THE GENERAL SCOPE OF WORK INVOLVED AND DOES NOT INCLUDE ALL DEVICES, LIGHT FIXTURES AND EQUIPMENT OR COMPLETE DETAILS OF THE WORK INVOLVED. THE CONTRACTOR, BASED ON HIS EXPERIENCE, SHALL INCLUDE IN THE ESTIMATE FOR THE WORK A REASONABLE AMOUNT OF RECONNECTION, REINSTALLATION, AND DEMOLITION WHICH MAY NOT BE REFLECTED BY THE PLANS OR IN THE SPECIFICATIONS.

MOST OF THE EXISTING DEVICES, LIGHT FIXTURES AND EQUIPMENT THAT HAVE BEEN IDENTIFIED FROM THE PROJECT'S AS-BUILT DRAWINGS AND/OR FROM THE A/E FIELD INVESTIGATION ARE SHOWN USING STANDARD SYMBOLS ON THE DEMOLITION PLAN. DISCONNECT AND REMOVE ALL EXISTING DEVICES, LIGHT FIXTURES AND EQUIPMENT SHOWN ON THE DEMOLITION PLAN AS REQUIRED UNLESS SPECIFICALLY NOTED OTHERWISE.

EQUIPMENT, FIXTURES OR DEVICES WHICH ARE TO REMAIN SHALL BE SHOWN DASHED ON THE RESPECTIVE POWER, LIGHTING OR OTHER APPLICABLE PLAN IN ADDITION TO THE DEMOLITION PLAN. SOME ITEMS WHICH ARE SHOWN TO BE REMOVED WILL BE RELOCATED AND REUSED. THOSE ITEMS WILL BE SHOWN DASHED ON THE RESPECTIVE POWER, LIGHTING OR OTHER APPLICABLE PLAN AND DESIGNATED AS RELOCATED.

MECHANICALLY AND ELECTRICALLY SECURE ALL ELECTRICAL CONDUIT AND CONDUCTORS WHICH ARE ABANDONED. ABANDONED WIRING SHALL BE REMOVED BACK TO THE OVER CURRENT DEVICE WHICH PROTECTS IT. ABANDONED CONDUIT SHALL BE REMOVED BACK TO THE POINT OF CONCEALMENT. EXISTING ELECTRICAL OUTLETS NOT SHOWN AS BEING ABANDONED OR REMOVED SHALL BE RECONNECTED AS REQUIRED. ALL ELECTRICAL DEVICES TO BE REMAIN SHALL INSPECTED, CLEANED AND REPAIRED OR REPLACED AS NECESSARY. MODIFY CIRCUITS TO EXISTING DEVICES, LIGHT FIXTURES AND EQUIPMENT SHOWN TO REMAIN IN ORDER TO MAINTAIN CONTINUITY OF POWER AND GROUNDING. RECONNECT CIRCUITS TO LOADS IN OTHER AREAS OF THE BUILDING OR SITE WHICH ARE AFFECTED BY DEMOLITION WORK.

PROVIDE NEW REVISED, TYPED PANELBOARD DIRECTORIES FOR EXISTING PANELBOARDS TO REFLECT NEW CIRCUIT CONDITIONS AS A RESULT OF CONSTRUCTION AND DEMOLITION. REPLACE ALL EXISTING DEVICES AND THE ASSOCIATED COVER PLATES WITH NEW DEVICES AND COVER PLATES TO MATCH THAT USED FOR RENOVATED AREAS AND NEW CONSTRUCTION. ALSO, WHERE NEW FINISHES ARE PLACED ON OR OVER EXISTING FINISHES EXTEND OUTLET BOXES TO ACCOMMODATE THE NEW FINISHES. EXISTING CONDUIT AND CONDUCTORS MANY BE REUSED WHERE THEY ARE OF THE TYPE SPECIFIED, MEET THE REQUIREMENTS OF NEW CIRCUITS, AND REMAIN IN GOOD CONDITION.

GROUNDING:

GROUNDING SHALL BE DONE IN ACCORDANCE WITH THE APPLICABLE SECTIONS OF THE NATIONAL ELECTRICAL CODE AND DETAILS SHOWN ON THE PLANS. GROUNDING FOR CIRCUITS SERVING LIGHTING, OUTLETS, OR EQUIPMENT IN PATIENT CARE AREAS SHALL COMPLY WITH NEC ARTICLE 517 AND SHALL INCLUDE A GREEN COPPER GROUNDING CONDUCTOR (#12 AWG MINIMUM) CONNECTED TO THE GROUNDING BAR IN THE SERVING PANELBOARD.

CONDUIT: CONDUIT SHALL BE REPUBLIC OR EQUAL.

CONDUIT SHALL BE MINIMUM 3/4-INCH SIZE AND ZINC-COATED ELECTRICAL METALLIC TUBING (EMT) EXCEPT IN WET, DAMP WASHDOWN AREAS (INCLUDING KITCHENS) WHERE GALVANIZED RIGID STEEL CONDUIT (GRS) OR INTERMEDIATE METAL CONDUIT (IMC) SHALL BE USED. EMT SHALL CONFORM TO UL 1242, NEC 342 AND ANSI C80.3; GRS SHALL BE SCHEDULE 40 STEEL WITH SURFACES PROTECTED BY METALLIC ZINC COATING AND SHALL CONFORM TO ANSI C80.1.

EMT FITTINGS SHALL BE GALVANIZED, STEEL COMPRESSION TYPE. EMT CONNECTORS SHALL HAVE INSULATED THROATS WHICH ARE AN INTEGRAL PART OF THE CONNECTOR. USE OF INSULATING SLEEVES IS NOT PERMITTED. GRS OR IMC CONDUIT ENTERING A BOX OR ENCLOSURE SHALL BE TERMINATED WITH A BUSHING. INSTALL BOND BUSHINGS WHERE REQUIRED BY THE NEC. FLEXIBLE CONDUIT CONNECTORS SHALL BE T&B NYLON INSULATED "TITE-BITE". INSTALL FLEXIBLE METAL CONDUIT FOR ALL FINAL CONNECTIONS TO MOTORS, TRANSFORMERS, AND TO OTHER EQUIPMENT, DEVICES AND APPLIANCES WHERE SUBJECT TO VIBRATION. USE LIQUID-TIGHT FLEXIBLE METAL CONDUIT IN KITCHENS, OUTDOORS AND ANY OTHER LOCATIONS SUBJECT TO MOISTURE.

SECURE CONDUITS WITH STRAPS AND CLAMPS MANUFACTURED FOR THE PURPOSE. TIE WIRE AND TIE WRAPS ARE NOT ALLOWED TO SUPPORT OR SECURE CONDUITS. ACCEPT IN AREAS SPECIFICALLY INDICATED ON THE PLANS CONDUIT SHALL BE RUN CONCEALED. CONDUITS SHALL BE RUN PARALLEL OR PERPENDICULAR TO STRUCTURAL ELEMENTS AND SHALL BE RUN IN GROUPS. WHERE RUN AT THE ROOF OR CEILING, GROUPINGS SHALL BE SINGLE DEPTH AND RUN TIGHT AGAINST THE STRUCTURE. FOR MULTIPLE DEPTH GROUPINGS AND OTHER SITUATIONS, A TRAPEZE ARRANGEMENT USING THREADED RODS OF SUFFICIENT SUPPORTING STRENGTH WILL PERMITTED. ALL CONDUITS SHALL BE KEPT A MINIMUM OF 6-INCHES AWAY FROM PARALLEL RUNS OF STEAM OR HOT WATER PIPES AND FLUES. PROVIDE APPROVED SEALS FOR ALL WORK INSTALLED IN HAZARDOUS AREAS AS REQUIRED BY NEC.

PROVIDE ACCESS DOORS IN WALLS AND CEILINGS FOR ACCESS TO PULL BOXES ACCESSORIES, ETC., UNDER THE ELECTRICAL CONTRACT. DOORS SHALL BE SIZED AS REQUIRED (MINIMUM 16-INCHES X 16-INCHES) WITH A FINISH TO MATCH THAT OF THE SURFACE IN WHICH IT IS INSTALLED.

PROVIDE A MINIMUM 100 POUND TEST, NYLON PULL CORD IN ALL EMPTY CONDUITS. CONDUIT PENETRATIONS THROUGH FIRE-RATED WALLS OR FLOOR SLABS SHALL BE SEALED WITH IMPERVIOUS, NON-COMBUSTIBLE MATERIALS IN SUCH A MANNER THAT THE ORIGINAL FIRE RATING IS RESTORED. CONDUIT PENETRATING BLOCK WALLS SHALL BE SLEEVED AND THEN SEALED. ALSO SEAL ALL WALL AND FLOOR PENETRATIONS LEFT ONCE CONDUIT TO BE DEMOLISHED HAS BEEN REMOVED. ALL PENETRATIONS SHALL BE SEALED USING UL LISTED METHODS.

OUTLET BOXES SHALL BE STANDARD GALVANIZED SHEET STEEL WITH STAMPED KNOCKOUTS EXCEPT THAT CAST TYPE BOXES SHALL BE USED IN INTERIOR WET LOCATIONS (INCLUDING KITCHENS), ON THE EXTERIOR OF THE BUILDING, AND FOR EXPOSED WORK IN UNFINISHED AREAS. COVERS FOR CAST BOXES IN WET AND EXTERIOR LOCATIONS SHALL BE GASKETED. MULTI-GANG BOXES SHALL BE OF SINGLE PIECE CONSTRUCTION. PULL BOXES SHALL BE CONSTRUCTED OF THE CODE GAUGE GALVANIZED SHEET METAL AND HAVE CONTINUOUS WELDED SEAMS. PULL BOXES SHALL COMPLY WITH NEC ARTICLE 370.

WIRING: POWER WIRING SHALL BE HI-TECH, ROME, SOUTHWIRE, TRIANGLE OR APPROVED EQUAL.

CONDUCTORS SHALL BE COPPER, THW, OR THHN/THWN, SOLID FOR CONDUCTORS SMALLER THAN #10 AWG AND STRANDED FOR LARGER SIZE CONDUCTORS. POWER FEEDERS ORIGINATING FROM THE DISTRIBUTION SECTION OF MAIN SWITCHGEAR SHALL BE TYPE XHHW OR THHN. ALL 120/208 VOLT ALTERNATING CURRENT (VAC) CONDUCTOR SHALL BE COLOR-CODED BLACK, RED, BLUE, WHITE AND GREEN FOR PHASES A, B, C, NEUTRAL, AND GROUND RESPECTIVELY. ALL 277/480 VOLT ALTERNATING CURRENT (VAC) CONDUCTORS SHALL BE COLOR-CODED BROWN, ORANGE, YELLOW, GRAY AND GREEN FOR PHASES A, B, C, NEUTRAL, AND GROUND RESPECTIVELY. LOW VOLTAGE CONDUCTORS SHALL BE SOLID OR STRANDED AS REQUIRED BY THE EQUIPMENT/SYSTEM MANUFACTURER.

ALL CONDUCTORS AND CABLES SHALL BE INSTALLED IN RACEWAYS EXCEPT AS FURTHER SPECIFIED HEREIN OR ON THE DRAWINGS. CONDUCTOR SIZES INDICATED ON CIRCUIT HOMERUNS OR IN PANELBOARD SCHEDULES SHALL BE INSTALLED OVER THE ENTIRE LENGTH OF THE CIRCUIT UNLESS NOTED OTHERWISE ON THE DRAWINGS. IT SHALL NOT BE PERMISSIBLE TO COMBINE CIRCUIT HOMERUNS INTO A SINGLE RACEWAY UNLESS SPECIFICALLY SHOWN ON PLANS AND NO MORE THAN THREE PHASE CONDUCTORS IS PERMITTED TO BE INSTALLED IN A SINGLE RACEWAY. ONLY ONE CIRCUIT PER CONDUIT SHALL BE ALLOWED FOR ISOLATION CIRCUITS. ISOLATION CIRCUITS SHALL BE RUN IN A MANNER TO PROVIDE THE SHORTEST DISTANCE.

VOLTAGE DROP SHALL NOT EXCEED: 3% MAXIMUM ON BRANCH CIRCUITS AND 2% MAXIMUM OF FEEDERS.

ELECTRICAL CONDUCTORS SHALL BE TESTED FOR CONTINUITY AND GROUNDS BEFORE BEING ENERGIZED. ALL FAULTY CONDUCTORS SHALL BE REPLACED. CONNECT ALL EQUIPMENT REQUIRING ELECTRICAL CONNECTIONS EXCEPT CONTROL CONDUCTORS FOR EQUIPMENT NOT PROVIDED UNDER DIVISION 26. CONTROL CONDUCTOR CONNECTIONS NOT PROVIDED UNDER DIVISION 26 SHALL BE DONE BY THE RESPECTIVE CONTRACTOR IN ACCORDANCE WITH THE SPECIFICATIONS. MAKE ALL FINAL POWER CONNECTIONS TO EACH RESPECTIVE LOAD TO ACHIEVE FULL ENERGIZATION OF THE LOAD. THIS SHALL INCLUDE WIRING THROUGH ANY INTEGRAL DISCONNECT DEVICE AND/OR CONTROL CABINET FURNISHED AS PART OF THE RESPECTIVE EQUIPMENT. COORDINATE THE POWER AND CONNECTION REQUIREMENTS FOR EQUIPMENT FURNISHED BY CONTRACTORS OF OTHER DIVISIONS. VERIFY THAT THE CIRCUITRY SHOWN FOR EACH LOAD MATCHES THE LOAD'S ACTUAL REQUIREMENTS SHOWN ON THE NAMEPLATE DATA OR MANUFACTURER'S PUBLISHED CRITERIA. INFORM THE ARCHITECT IF ADJUSTMENTS TO CONDUIT, WIRING, FUSE SIZES, ETC., ARE NEEDED TO MEET THE LOADS ACTUAL REQUIREMENTS. CHANGES TO EQUIPMENT DUE TO AN APPROVED SUBSTITUTION OR OTHERWISE NECESSARY TO SUIT A MANUFACTURERS NEEDS SHALL INCLUDE THE COST BY THE MANUFACTURER FOR MAKING ELECTRICAL CHANGES.

THE CONDUIT OF THE ELECTRICAL SYSTEM AND ALL ELECTRICAL EQUIPMENT SHALL BE GROUNDED. PROVIDE AN EQUIPMENT GROUNDING CONDUCTOR WITH EVERY CIRCUIT AND IN EVERY CONDUIT. THE CONDUIT SYSTEM AND NEUTRAL (GROUNDED CONDUCTOR) SHALL BE BONDED TOGETHER ONLY AT THE SERVICE ENTRANCE EQUIPMENT. GROUNDING AT THE SERVICE ENTRANCE SHALL BE IN ACCORDANCE WITH NEC ARTICLE 250. NO CONDUIT SHALL CONTAIN MORE THAN THREE PHASE CONDUCTORS.

DEVICES: WIRING DEVICES SHALL BE HUBBELL, PASS & SEYMOUR OR ARROW-HART.

ALL WIRING DEVICES SHALL BE SPECIFICATION GRADE. ALL WIRING DEVICES SHALL BE HOSPITAL GRADE IN PATIENT CARE AREAS. THE COLOR SHALL BE SELECTED BY THE ARCHITECT, FROM THE MANUFACTURER'S STANDARD COLORS DURING SHOP DRAWING REVIEW. COLORS SHALL INCLUDE BROWN, IVORY, GRAY AND WHITE AS A MINIMUM. ALL DEVICES CONNECTED TO THE EMERGENCY POWER SYSTEM SHALL BE RED. DEVICE PLATES FOR FLUSH MOUNTED DEVICES SHALL BE STANDARD SIZE, NYLON OR LEXAN TYPES EQUAL TO HUBBELL'S "N" SERIES. PROVIDE OVERSIZE PLATES FOR DEVICES INSTALLED IN CONCRETE BLOCK, BRICK OR STONE CONSTRUCTION.

RECEPTACLES, PLUGS, AND PLUG CONNECTORS SHALL BE HEAVY-DUTY, COMMERCIAL GRADE. THE BODY SHALL BE CONSTRUCTED OF THERMOPLASTIC (NYLON, LEXAN) MATERIAL. RECEPTACLES SHALL BE NON-INTERCHANGEABLE TYPES OF STANDARD NEMA CONFIGURATION AS INDICATED ON THE DRAWINGS. COMPLY WITH THE RESPECTIVE ANSI C73 SERIES STANDARD FOR THE NEMA CONFIGURATION USED. RECEPTACLES SHALL BE UL LISTED AND LABELED AND SHALL CONFORM TO NEMA STANDARD NO. WDI-101968. ALL DEVICES SHALL BE LABELED PER PALMETTO HEALTH RICHLAND ENGINEERING STANDARDS.

DUPLEX RECEPTACLES SHALL BE OF THE GROUNDING, POWER INDICATING TYPE, ARRANGED FOR BACK AND SIDE WIRING WITH SPRING-BACKED LINE TERMINALS AND SEPARATE SINGLE OR DOUBLE GROUNDING TERMINALS. DUPLEX RECEPTACLES SHALL BE RATED FOR 20 AMP 125 VOLT OPERATION AND THE FACE CONFIGURATION SHALL CONFORM TO NEMA STANDARD NO. WDI.101968. A SEPARATE GROUNDING SCREW TERMINAL SHALL BE PROVIDED WITH A DIRECT CONNECTION MADE TO A GREEN INSULATED EQUIPMENT GROUNDING CONDUCTOR WHICH IS PART OF THE EQUIPMENT GROUNDING SYSTEM. SELF GROUNDING OR AUTOMATIC GROUNDING TYPE RECEPTACLES ARE NOT ACCEPTABLE.

GROUND FAULT CIRCUIT INTERRUPTING DUPLEX RECEPTACLES SHALL BE SELF-CONTAINED, NEMA 5-20R, HEAVY DUTY, COMMERCIAL GRADE WITH FEED-THRU FEATURE TO PROTECT DOWNSTREAM DEVICES ON THE SAME CIRCUIT. SURGE SUPPRESSOR RECEPTACLES SHALL BE PERMANENTLY CONNECTED. FLUSH MOUNTED TYPE AND PROVIDE PROTECTION OF NOT LESS THAN 80 JOULES IN ALL THREE MODES: HOT TO NEUTRAL, NEUTRAL TO GROUND, AND HOT TO GROUND. EACH MODE SHALL UTILIZE A SEPARATE MOV TO ACCOMPLISH PROTECTION AND AN INTEGRAL INDICATING LIGHT SHALL BE INCLUDED IN EACH DEVICE.

THE FACE OF RECEPTACLES CONNECTED TO EMERGENCY BRANCH CIRCUITS SHALL BE RED IN COLOR.

SWITCHES PROVIDED FOR CONTROLLING LIGHT FIXTURES SHALL BE THERMOPLASTIC, HEAVY DUTY, SPECIFICATION GRADE. SWITCHES SHALL BE ARRANGED FOR BACK AND SIDE WIRING AND SHALL HAVE A GROUNDING TERMINAL. SWITCHES SHALL BE VIRTUALLY SILENT OPERATING, NONINTERCHANGEABLE, FLUSH MOUNTED TYPES WHICH SHALL COMPLY WITH NEMA WD-1. LIGHT SWITCHES CONTROLLING LIGHT FIXTURES ON EMERGENCY POWER SHALL HAVE HANDLES WHICH ARE ILLUMINATED IN THE "OFF" POSITION. SWITCHES SHALL BE UL LISTED AND LABELED FOR OPERATION AT THE VOLTAGE AND AMPERAGES NECESSARY FOR THE USE INDICATED. NO 120 VOLT OR 277 VOLT SWITCH SHALL BE RATED LESS THAN 20 AMPERES.

POWER EQUIPMENT: POWER EQUIPMENT SHALL BE SQUARE D OR GENERAL ELECTRIC

LIGHTING EQUIPMENT:

PROVIDE LIGHTING FIXTURES AS SCHEDULED ON THE DRAWINGS OF SIZES, TYPES AND RATINGS INDICATED; COMPLETE WITH BUT NOT NECESSARILY LIMITED TO, HOUSING, LAMPS, LAMP HOLDERS, REFLECTORS, BALLASTS, STARTERS, WIRING, MOUNTING HARDWARE, POLES, AND POLE BASES. CATALOG NUMBERS ARE FOR GENERAL IDENTIFICATION OF FIXTURES ONLY. IT IS THE RESPONSIBILITY OF THE CONTRACTOR TO PROVIDE COMPLETE CATALOG NUMBERS AND TO PROVIDE ALL ACCESSORIES FOR A COMPLETE INSTALLATION AS IMPLIED BY THE ACCOMPANYING DESCRIPTION OF THE LIGHT FIXTURE, THE DEMONSTRATED USE ON THE DRAWINGS, AND THE SPECIFICATIONS CONTAINED HEREIN. ALL LIGHTING FIXTURES SHALL BE UL LABELED. THE LABEL SHALL BE PERMANENTLY ATTACHED TO THE FIXTURE FRAME, HOUSING OR OTHER NON-RENEWABLE COMPONENT. PROVIDE FIXTURES AND/OR FIXTURE OUTLET BOXES WITH HANGERS TO PROPERLY SUPPORT FIXTURE WEIGHT. FASTEN LIGHT FIXTURES AND LIGHT FIXTURE SUPPORTS SECURELY TO BUILDING STRUCTURAL MEMBERS. IT IS NOT PERMISSIBLE TO RELY ON SUSPENDED CEILINGS AS THE SOLE MEANS OF SUPPORT FOR LIGHT FIXTURES. REFER TO ARCHITECTURAL CEILING PLANS FOR CEILING TYPE AND PROVIDE LIGHT FIXTURES WHICH ARE COMPATIBLE WITH THE SURFACE OR CEILING IN OR ON WHICH IT WILL BE INSTALLED. DO NOT DEPEND ON CATALOG NUMBERS FOR SUCH INFORMATION. VOLTAGES OF ALL LIGHT FIXTURES SHALL BE DETERMINED BY THE CIRCUIT TO WHICH EACH FIXTURE IS CONNECTED. SEE LIGHTING FIXTURE SCHEDULE FOR ADDITIONAL REQUIREMENTS.

FIRE ALARM SYSTEM: SPECIAL SYSTEMS CABLES (FIRE ALARM) SHALL BE BELDEN, ALPHA OR CONSOLIDATED.

MODIFY THE EXISTING FIRE ALARM SYSTEM TO ACCOMMODATE THE ADDITION, DELETION, AND RELOCATION OF FIRE ALARM DEVICES. NEW DEVICES SHALL MATCH EXISTING DEVICES IN THIS AREA OF THE FACILITY. THE FIRE ALARM SYSTEM INSTALLATION SHALL MEET ALL NFPA 72 & NFPA 101 REQUIREMENTS. THE COMPLETE INSTALLATION AND SYSTEM TESTING SHALL BE UNDER THE SUPERVISION OF A FACTORY TRAINED AND AUTHORIZED REPRESENTATIVE OF THE EQUIPMENT MANUFACTURER. NEW NOTIFICATION DEVICES SHALL BE TIED INTO EXISTING NOTIFICATION APPLIANCE CIRCUITS THAT WERE FEEDING AREA PRIOR TO DEMOLITION. NEW DETECTION DEVICES SHALL BE TIED INTO EXISTING INITIATING DEVICE CIRCUITS THAT WERE FEEDING AREA PRIOR TO DEMOLITION. TEST ALL NEW DEVICES IN ACCORDANCE WITH NFPA 72 REQUIREMENTS AND PROVIDE A CERTIFICATE OF COMPLETION TO THE OWNER.

TELECOMMUNICATIONS SYSTEMS: PROVIDE A SYSTEM OF EMPTY CONDUITS AND SYSTEM OUTLET BOXES TO ACCOMMODATE INSTALLATION OF THE OWNER'S TELECOMMUNICATIONS SYSTEM. THE RACEWAY SYSTEM SHALL COMPLY WITH EIA/TIA 568 & 569 STANDARDS.

OTHER REQUIREMENTS:

TESTING: THE CONTRACTOR SHALL TEST ALL 'LIFE SAFETY' EQUIPMENT AND SYSTEMS FOR PROPER FUNCTION AND OPERATION. THE CONTRACTOR SHALL PROVIDE WRITTEN CONFIRMATION OF THE TEST TO THE ENGINEER STATING THE TEST PERFORMED, THE RESULTS OF THE TEST, AND THE DATE OF THE TEST. 'LIFE SAFETY' EQUIPMENT AND SYSTEMS ARE SPECIFIED IN NFPA 101.

FIRE ALARM SYMBOL SCHEDULE

NOTE: ALL FIRE ALARM SYSTEM CONDUIT SHALL BE ¾" MINIMUM UNLESS OTHERWISE NOTED.

S	SMOKE DETECTOR.
F	FIRE ALARM SPEAKER/STROBE. WALL MOUNTED.
F	FIRE ALARM STROBE ONLY. WALL MOUNTED.
F	FIRE ALARM SPEAKER/STROBE. CEILING MOUNTED.
F	FIRE ALARM STROBE ONLY. CEILING MOUNTED.
F	FIRE ALARM SPEAKER ONLY. CEILING MOUNTED.

INTERIOR LIGHT FIXTURE SCHEDULE

FIXTURE TYPE	DESCRIPTION	MANUFACTURER	LAMPS	CONTROLS	REMARKS	WATTS
A4	2' x 4', LED DIRECT-INDIRECT TROFFER, PAINTED AFTER FABRICATION CODE GUAGE STEEL HOUSING. ELECTRONIC 0-10V DIMMING LED DRIVER. 4000K CCT. UNV VOLT.	WILLIAMS #LT24-L82-8-40-AF-DIM-UNV SERIES COLUMBIA #LCAT-24-VL-ED SERIES OR APPROVED EQUAL PHILIPS, LITHONIA	LED 8200 LUMENS	SWITCH OR SWITCH VIA OCC SENSOR	HALF SHADING INIDICATES FIXTURE CONNECTED TO EMERGENCY GENERATOR	38 PER 4'
	EXIT SIGN UNIVERSAL MOUNTING WITH FIELD SELECTABLE CHEVRON ARROWS; PROVIDE NUMBER OF FACES (SINGLE/DUAL) AS INDICATED ON PLAN SHEETS. RED LETTERS. MATCH EXISTING EXIT SIGNS. UL 924 LISTED, UNIVERSAL VOLTAGE.	MATCH EXISTING EXIT SIGNS	LED INCLUDED	UNSWITCHED	EXIT SIGN	

GENERAL NOTES:

1. THE CONTRACTOR SHALL COMPLY WITH NFPA 70 – THE NATIONAL ELECTRICAL CODE. ANY DISCREPANCIES BETWEEN THE PLANS AND NEC SHALL BE BROUGHT TO THE ATTENTION OF THE ENGINEER PRIOR TO INSTALLATION OF EQUIPMENT.
2. THE CONTRACTOR SHALL MAINTAIN A COMPLETE SET OF PLANS AND SPECIFICATIONS ON SITE DURING CONSTRUCTION. ALL WORK SHALL BE CAREFULLY COORDINATED WITH THE PLANS/SPECIFICATIONS AND WITH ALL OTHER TRADES. ANY CONFLICTS SHALL BE RESOLVED PRIOR TO THE INSTALLATION OF ANY WORK.
3. THE CONTRACTOR SHALL MAINTAIN A COMPLETE SET OF SHOP DRAWINGS ON SITE DURING CONSTRUCTION.
4. THE CONTRACTOR SHALL CAREFULLY COORDINATE THE EXACT MOUNTING HEIGHT AND LOCATION OF ALL WALL MOUNTED DEVICES WITH ARCHITECTURAL INTERIOR ELEVATIONS, MILLWORK DETAILS, AND EQUIPMENT VENDOR SHOP DRAWINGS PRIOR TO ROUGH-IN.
5. THE CONTRACTOR IS CAUTIONED THAT OWNER REQUIREMENTS MAY REQUIRE SCHEDULING OF CERTAIN PORTIONS OF WORK AFTER NORMAL BUSINESS HOURS AND ON WEEKENDS. THE OWNER SHALL APPROVE THE WORK SCHEDULE PRIOR TO COMMENCING WORK. THE CONTRACTOR SHALL INCLUDE IN BID FOR SUCH AFTER HOURS WORK.
6. THE CONTRACTOR SHALL NOT INTERRUPT POWER FROM ANY PANEL OR LOAD WITHOUT THE WRITTEN PERMISSION OF THE OWNER. ALL REQUIRED POWER INTERRUPTIONS SHALL BE SCHEDULES WITH THE OWNER AT LEAST ONE WEEK IN ADVANCE. REQUESTS FOR INTERRUPTIONS SHALL BE MADE IN WRITING, STATING DATE, TIME, AND ESTIMATED DURATION OF INTERRUPTION. SCHEDULE AND PERFORMANCE OF WORK SHALL MINIMIZE THE NUMBER AND DURATION OF POWER INTERRUPTIONS.
7. THE CONTRACTOR SHALL PROVIDE HORIZONTAL SEPARATION BETWEEN ALL BACK TO BACK RECESSED WALL MOUNTED DEVICES.
8. ACCESSIBLE CEILING SPACE SHALL BE LAY-IN CEILING AREAS, NOT GYPSUM (HARD) CEILING TYPE AREAS.

ABBREVIATIONS:

A OR AMP	AMPERES
C	CONDUIT
GF	GROUND FAULT CIRCUIT INTERRUPTER
J OR JB	JUNCTION BOX
KVA	KILOVOLT-AMPERES
KW	KILOWATTS
NEC	NATIONAL ELECTRICAL CODE
NTS	NOT TO SCALE
P	POLES OR PHASE
SPEC	SPECIFICATIONS
TYP	TYPICAL
V	VOLTS
WP	WEATHERPROOF

SSOE
S&W

PROFESSIONAL SEALS:

SOUTH CAROLINA CERTIFICATE OF AUTHORIZATION SSOE, INC No. 746

SOUTH CAROLINA PROFESSIONAL ENGINEER No. 16536 BRIAN K. BRANHAM 8/06/21

SUBMITTAL/REVISION SCHEDULE:

NO.	DATE	DESCRIPTION
	8.06.2021	CONSTRUCTION DOCUMENTS

■ APPROVED FOR CONSTRUCTION
□ NOT APPROVED FOR CONSTRUCTION

CLIENT INFORMATION:

SOUTH CAROLINA EDUCATION LOTTERY

CLIENT PROJECT #: 20048.00
JHA PROJECT #: Y20-N001-CB

PROJECT INFORMATION:

4TH FLOOR UPFIT

1333 MAIN STREET, COLUMBIA, SOUTH CAROLINA

SSOE/SW PROJECT #: 021-00531-00
SSOE/SW MANAGER: BILL FLEMING

SSOE | STEVENS & WILKINSON
1501 Main Street, Suite 730
Columbia, SC 29201
T. (803) 765-0320

THIS DRAWING IS THE PROPERTY OF SSOE | STEVENS & WILKINSON. UNAUTHORIZED USE OF ANY KIND, INCLUDING USE ON OTHER PROJECTS, IS PROHIBITED.
© SSOE, INC. 2021

ELECTRICAL SCHEDULES

E0.01

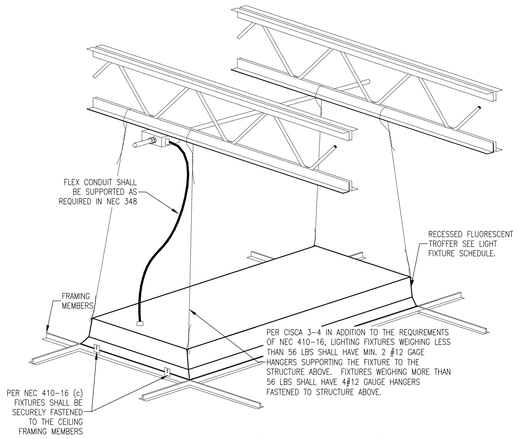

WHERE FIXTURES ARE HUNG IN A FIRE RATED CEILING, THE CEILING CONTRACTOR SHALL PROVIDE FIRE PROTECTION AS SHOWN IN UL FIRE RESISTANCE BOOK AS DESIGN NOTE P230 OR P510.

1 RECESSED LAY-IN FIXTURE DETAIL

SCALE: NTS

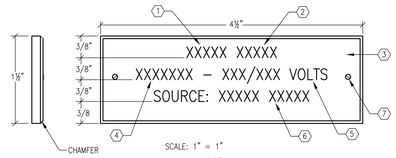

SCALE: 1" = 1"

ALL TEXT SHALL BE 3/16" IN HEIGHT

LABELS SHALL BE APPLIED TO ALL PANELS, DISCONNECTS SWBD'S, TRANSFORMERS AND BUS DUCTS.

LABEL NOTES:

1. TYPE OF EQUIPMENT WHERE X'S ARE INDICATED. POSSIBLE CHOICES ARE:
   "PANEL" "DISC"
   "XFMR" "SWBD"
2. EQUIPMENT NAME (EX. ELC1)
3. COLOR: (FACE/BACKGROUND)
   (BLK/WH) – NORMAL POWER
   (RED/WH) – ALL EMERGENCY POWER
4. SUPPLY SOURCE WHERE X'S ARE INDICATED. POSSIBLE CHOICES ARE:
   "NORMAL"
   "EMERGENCY"
5. INSERT VOLTAGE WHERE X'S ARE INDICATED. POSSIBLE CHOICES ARE:
   "277/480V" "480"
   "120/208V" "208"
6. INSERT SUPPLYING PANEL DESIGNATION WHERE X'S ARE INDICATED. (EX. PANEL 1PP1, XFMR 1T1). WHEN THIS EQUIPMENT IS SERVED DIRECTLY FROM A TRANSFORMER, THE PANEL SERVING THE TRANSFORMER SHALL ALSO BE LISTED.
7. SECURE SCREWS TO PANELBOARD COVER WITH #4-40 STAINLESS STEEL COUNTERSINK SCREWS WITH MATCHING NUTS AND LOCKWASHERS.

2 TYPICAL PANELBOARD LABEL DETAIL

SCALE: NTS

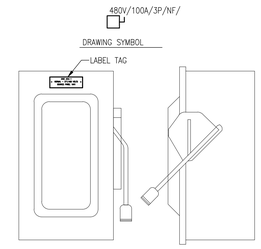

ALL SWITCHES SHALL BE HEAVY DUTY TYPE, FED. SPEC. W-S-865, U.L. 98, NEMA KSI-1975; 240V OR 600V TO SUIT CIRCUIT VOLTAGE. ALL SWITCHES FUSIBLE UNLESS NOTED ON DRAWINGS. PROVIDE FUSES TO SUIT LOAD. ENCLOSURES NEMA 3R OUTDOORS AND IN WET LOCATIONS. NEMA 1 ELSEWHERE UNLESS NOTED ON DRAWINGS.

QUICK MAKE – QUICK BREAK OPERATION.

OPERATING HANDLE LOCKABLE IN OPEN OR CLOSED POSITION.

COVER INTERLOCK AND INDICATOR HANDLE

3 DISCONNECT SWITCH DETAIL

SCALE: NTS

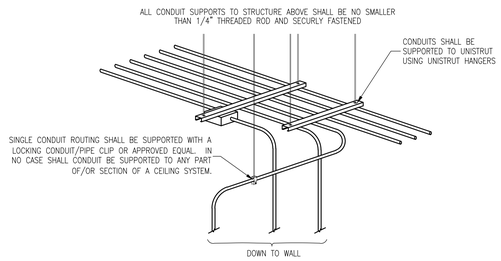

ALL CONDUIT ROUTING AND SUPPORTING SHALL COMPLY WITH SPECS, NEC 110-12 AND 340 THRU 362, WITH NO EXCEPTIONS. IF CONDUITS CAN NOT BE SUPPORTED FROM THE BUILDING STRUCTURE: CONDUIT ROUTING WITH THREE OR MORE CONDUITS GROUPED TOGETHER SHALL BE SUPPORTED FROM MINIMUM 3/4" UNISTRUT WITH A MINIMUM OF 2 SUPPORTING 1/4" ALL THREAD RODS FROM THE STRUCTURE ABOVE.

4 CONDUIT HANGING FOR MULTI/SINGLE ROUTING

SCALE: NTS

ALL WALL MOUNTED DEVICES SHALL BE COORDINATED WITH ARCHITECTURAL INTERIOR ELEVATIONS AND DETAILS. THE ARCHITECT SHALL DETERMINE FINAL PLACEMENT OF ALL DEVICES. REFER TO ARCHITECTURAL ELEVATION PLANS.

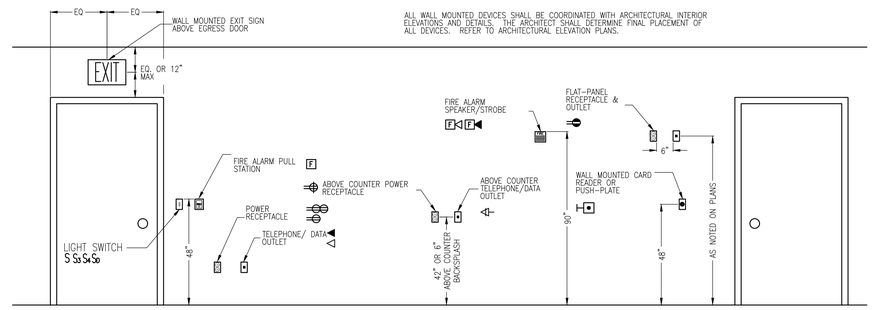

5 TYPICAL ELECTRICAL BACKBOX LAYOUT

SCALE: NTS

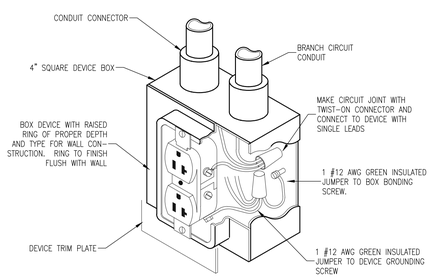

6 TYPICAL DUPLEX RECEPTACLE INSTALLATION

SCALE: NTS

SSOE

S&W

PROFESSIONAL SEALS:

SOUTH CAROLINA SSOE, INC. No. 746 CERTIFICATE OF AUTHORIZATION

SOUTH CAROLINA No. 16536 BRIAN K. BRAHAM 8/06/2

SUBMITTAL/REVISION SCHEDULE:

NO.	DATE	DESCRIPTION
	8.06.2021	CONSTRUCTION DOCUMENTS

■ APPROVED FOR CONSTRUCTION
□ NOT APPROVED FOR CONSTRUCTION

CLIENT INFORMATION:

SOUTH CAROLINA EDUCATION LOTTERY

South Carolina Education Lottery®

CLIENT PROJECT #:	20048.00
JHA PROJECT #:	Y20-N001-CB

PROJECT INFORMATION:

4TH FLOOR UPFIT

1333 MAIN STREET, COLUMBIA, SOUTH CAROLINA

SSOE/SW PROJECT #:	021-00531-00
SSOE/SW MANAGER:	BILL FLEMING

SSOE | STEVENS & WILKINSON
1501 Main Street, Suite 730
Columbia, SC 29201
T. (803) 765-0320

THIS DRAWING IS THE PROPERTY OF SSOE | STEVENS & WILKINSON. UNAUTHORIZED USE OF ANY KIND, INCLUDING USE ON OTHER PROJECTS, IS PROHIBITED.
© SSOE, INC. 2021.

ELECTRICAL DETAILS

E0.02

1 LIGHTING
LEVEL 4 FLOOR PLAN
1/4" = 1'-0"

GENERAL NOTES (THIS DRAWING ONLY):

A. ALL 120/208V CIRCUITS SHALL BE ROUTED TO PANEL DESIGNATED WITH 2#12, 1#12 GND, 3/4"C. WITH A 20A/1P BKR MINIMUM, UNLESS OTHERWISE REQUIRED. PROVIDE PHASE CONDUCTORS AS REQUIRED FOR NUMBER OF HOMERUNS INDICATED. MULTI-CIRCUIT HOMERUNS MAY SHARE NEUTRALS PROVIDED THEY MEET REQUIREMENTS OF NEC 210.4(B).

B. COORDINATE EXACT LOCATION OF LIGHT FIXTURES WITH ARCHITECTURAL REFLECTED CEILING PLANS.

C. COORDINATE EXACT LOCATION OF ALL WALL MOUNTED DEVICES WITH ARCHITECTURAL ELEVATION PLANS AND CEILING MOUNTED DEVICES WITH ARCHITECTURAL REFLECTED CEILING PLANS.

D. ALL EXIT SIGNS SHALL BE TYPE "X1" UNLESS OTHERWISE NOTED. ALL COMBO EXIT SIGNS SHALL BE TYPE "X2" UNLESS OTHERWISE NOTED. ALL EMERGENCY WALLPACKS SHALL BE TYPE "Y1" UNLESS OTHERWISE NOTED. ALL EXIT SIGNS AND EMERGENCY WALLPACKS SHALL BE CONNECTED UNSWITCHED TO THE LIGHTING BRANCH CIRCUIT IN EACH SPACE.

E. COORDINATE EXACT LIGHTING CONTROL EQUIPMENT CONNECTIONS REQUIRED WITH LIGHTING CONTROL EQUIPMENT SUPPLIER AND APPROVED LIGHTING CONTROLS EQUIPMENT SHOP DRAWINGS.

LIGHTING FLOOR PLAN KEY NOTES:

1. PROVIDE NEW LIGHT FIXTURES AS SHOWN. CONNECT NEW NORMAL LIGHTING TO EXISTING LIGHTING CIRCUIT ABANDONED DURING DEMOLITION. EXTEND EXISTING CIRCUIT TO NEW LIGHT FIXTURES AS REQUIRED. 3/4"C., 2 #12, #12 GND.
2. PROVIDE NEW LIGHT FIXTURES AS SHOWN. CONNECT NEW EMERGENCY LIGHTING TO EXISTING EMERGENCY LIGHTING CIRCUIT ABANDONED DURING DEMOLITION. EXTEND EXISTING CIRCUIT TO NEW LIGHT FIXTURES AS REQUIRED. 3/4"C., 2 #12, #12 GND.

SSOE

S&W

PROFESSIONAL SEALS:

SOUTH CAROLINA
SSOE, INC
No. 746
CERTIFICATE OF AUTHORIZATION

SOUTH CAROLINA
BRIAN K. BRAMHAM
No. 16536
8/06/21

SUBMITTAL/REVISION SCHEDULE:

NO.	DATE	DESCRIPTION
	8.06.2021	CONSTRUCTION DOCUMENTS

■ APPROVED FOR CONSTRUCTION
☐ NOT APPROVED FOR CONSTRUCTION

CLIENT INFORMATION:

SOUTH CAROLINA EDUCATION LOTTERY

South Carolina Education Lottery®

CLIENT PROJECT #:	20048.00
JHA PROJECT #:	Y20-N001-CB

PROJECT INFORMATION:

4TH FLOOR UPFIT

1333 MAIN STREET, COLUMBIA, SOUTH CAROLINA

SSOE/SW PROJECT #:	021-00531-00
SSOE/SW MANAGER:	BILL FLEMING

SSOE | STEVENS & WILKINSON
1501 Main Street, Suite 730
Columbia, SC 29201
T: (803) 765-0320

THIS DRAWING IS THE PROPERTY OF SSOE | STEVENS & WILKINSON. UNAUTHORIZED USE OF ANY KIND, INCLUDING USE ON OTHER PROJECTS, IS PROHIBITED.
© SSOE, INC. 2021.

LIGHTING
LEVEL 4 FLOOR PLAN

E1.41

1 POWER & COMMUNICATIONS
LEVEL 4 FLOOR PLAN
1/4" = 1'-0"

GENERAL NOTES (THIS DRAWING ONLY):

A. ALL 120/208V CIRCUITS SHALL BE ROUTED TO PANEL DESIGNATED WITH 2#12, 1#12 GND, 3/4"C. WITH A 20A/1P BKR MINIMUM, UNLESS OTHERWISE REQUIRED. PROVIDE PHASE CONDUCTORS AS REQUIRED FOR NUMBER OF HOMERUNS INDICATED. MULTI-CIRCUIT HOMERUNS MAY SHARE NEUTRALS PROVIDED THEY MEET REQUIREMENTS OF NEC 210.4(B).

B. COORDINATE EXACT LOCATION OF ALL WALL MOUNTED DEVICES WITH ARCHITECTURAL ELEVATION PLANS AND CEILING MOUNTED DEVICES WITH ARCHITECTURAL REFLECTED CEILING PLANS.

C. COORDINATE EXACT EQUIPMENT POWER CONNECTIONS REQUIRED WITH EQUIPMENT SUPPLIER AND APPROVED EQUIPMENT SHOP DRAWINGS.

D. ALL RECEPTACLES IN SPECIAL EDUCATION CLASSROOMS AND ASSOCIATED SPACES SHALL BE TAMPER-PROOF TYPE.

E. VERIFY THE EXACT LOCATION OF ALL FLOORBOXES WITH A DIMENSIONED PLAN FROM THE ARCHITECT PRIOR TO ROUGH-IN.

POWER & COMMUNICATIONS FLOOR PLAN KEY NOTES:

1. RELOCATE EXISTING POWER RECEPTACLE FOR SMALL CUTTER AS SHOWN. EXTEND EXISTING CIRCUIT AS REQUIRED. 0.75"C., 2 #12, #12 GND.
2. RELOCATE EXISTING POWER RECEPTACLE FOR LARGE FORMAT PRINTER AS SHOWN. EXTEND EXISTING CIRCUIT AS REQUIRED. 0.75"C., 2 #12, #12 GND.
3. RELOCATE EXISTING POWER RECEPTACLE FOR SERVICE TO LARGE CUTTER AS SHOWN. EXTEND EXISTING CIRCUIT AS REQUIRED. 0.75"C., 2 #12, #12 GND.
4. EXISTING PAGING SYSTEM SPEAKER TO BE RELOCATED TO NEW CEILING AS SHOWN. EXTEND EXISTING PAGING SYSTEM CIRCUIT AS REQUIRED. 0.75"C., WITH CABLE PER MANUFACT.
5. EXISTING FIRE ALARM STROBE NOTIFICATION APPLIANCE TO BE RELOCATED TO NEW CEILING AS SHOWN. EXTEND EXISTING FIRE ALARM NAC CIRCUIT AS REQUIRED. 0.75"C., WITH CABLE PER MANUFACT.
6. EXISTING FIRE ALARM VOICE EVACUTATION SPEAKER NOTIFICATION APPLIANCE TO BE RELOCATED TO NEW CEILING AS SHOWN. EXTEND EXISTING FIRE ALARM VOICE EVAC SPEAKER CIRCUIT AS REQUIRED. 0.75"C., WITH CABLE PER MANUFACT.
7. PROVIDE NEW PAGING SYSTEM SPEAKER AS SHOWN. EXTEND EXISTING PAGING SYSTEM CIRCUIT TO NEW SPEAKER AS REQUIRED. 0.75"C., WITH CABLE PER MANUFACT.
8. PROVIDE NEW FIRE ALARM STROBE NOTIFICATION APPLIANCE AS SHOWN. EXTEND EXISTING FIRE ALARM NAC CIRCUIT TO NEW DEVICE AS REQUIRED. 0.75"C., WITH CABLE PER MANUFACT.
9. PROVIDE NEW FIRE ALARM VOICE EVACUTATION SPEAKER NOTIFICATION APPLIANCE AS SHOWN. EXTEND EXISTING FIRE ALARM VOICE EVAC SPEAKER CIRCUIT TO NEW SPEAKER AS REQUIRED. 0.75"C., WITH CABLE PER MANUFACT.
10. PROVIDE POWER TO NEW WATER SOURCE HEAT PUMP WSHP-01 AS SHOWN. PROVIDE NEW 20/3 BREAKER IN EXISTING PANEL LMP (LOTTERY MECHANICAL PANEL) AND CONNECT USING 0.75"C., 3 #12, #12 GND.
11. PROVIDE POWER TO NEW EXHAUST FAN LOCATED ON ROOF LEVEL AS SHOWN. REUSE EXISTING EXHASUST FAN CIRCUIT FROM EXISTING MOTOR CONTROL CENTER LOCATED ON ROOF LEVEL. EXTEND EXISTING CIRCUIT AS REQUIRED. 0.75"C., 3 #12, #12 GND.

PROFESSIONAL SEALS:

SOUTH CAROLINA CERTIFICATE OF AUTHORIZATION SSOE, INC No. 746

SOUTH CAROLINA PROFESSIONAL ENGINEER No. 16536 BRIAN K. BRAHAM Date 8/06/21

SUBMITTAL/REVISION SCHEDULE:

NO.	DATE	DESCRIPTION
	8.06.2021	CONSTRUCTION DOCUMENTS

■ APPROVED FOR CONSTRUCTION
☐ NOT APPROVED FOR CONSTRUCTION

CLIENT INFORMATION:

SOUTH CAROLINA EDUCATION LOTTERY

CLIENT PROJECT #:	20048.00
JHA PROJECT #:	Y20-N001-CB

PROJECT INFORMATION:

4TH FLOOR UPFIT

1333 MAIN STREET, COLUMBIA, SOUTH CAROLINA

SSOE/SW PROJECT #:	021-00531-00
SSOE/SW MANAGER:	BILL FLEMING

SSOE | STEVENS & WILKINSON
1501 Main Street, Suite 730
Columbia, SC 29201
T. (803) 765-0320

THIS DRAWING IS THE PROPERTY OF SSOE (STEVENS & WILKINSON). UNAUTHORIZED USE OF ANY KIND, INCLUDING USE ON OTHER PROJECTS, IS PROHIBITED.
© SSOE, INC. 2021

POWER & COMMUNICATIONS
LEVEL 4 FLOOR PLAN

E2.41

1 LEVEL 4 DEMOLITION PLAN
1/4" = 1'-0"

DEMOLITION LEGEND

B01	KEYNOTE - SEE KEYNOTE LEGEND
	AREA OF "NO WORK"
	AREA OF DEMOLITION AS DESCRIBED
	CONSTRUCTION TO BE DEMOLISHED (PLAN) [SEE KEYNOTES FOR MORE DETAIL]
	EXISTING EXTERIOR CONSTRUCTION (PLAN)
	EXISTING INTERIOR NON-RATED CONSTRUCTION
	EXISTING INTERIOR 1 HOUR CONSTRUCTION
	EXISTING INTERIOR 2 HOUR CONSTRUCTION

DEMOLITION KEYNOTE LEGEND

KEYNOTE #	DESCRIPTION
SLABS & FLOOR FINISHES	
A02	REMOVE EXISTING CARPET AND RUBBER BASE COMPLETE. PREPARE FLOOR TO RECEIVE NEW FINISHES AS SPECIFIED.
A03	REMOVE EXISTING VCT AND RUBBER BASE COMPLETE. PREPARE FLOOR TO RECEIVE NEW FINISHES AS SPECIFIED.
WALLS & WALL FINISHES	
B01	REMOVE WALL COMPLETELY. CAP ANY UTILITIES AS REQUIRED - SEE PLUMBING AND ELECTRICAL DRAWINGS FOR MORE INFORMATION. PREPARE ADJACENT WALL AND FLOOR SURFACES TO RECEIVE NEW FINISHES AS SPECIFIED.
B07	PREPARE WALL TO RECIEVE NEW FINISHES. SEE FINISH LEGEND AND SCHEDULES.
DOORS & FRAMES	
D01	REMOVE DOOR AND HOLLOW FRAME COMPLETELY PREPARE ADJACENT SURFACES TO RECEIVE FINISHES AS SPECIFIED AND INFILL OPENING TO MATCH ADJACENT SURFACES.
EQUIPMENT, CASEWORK & FURNITURE	
F16	PROTECT EXISTING WALL MOUNTED DEVICES TO REMAIN (INTERCOM, CLOCK, ETC.) REMOVE PROTECTION AND CLEAN UPON COMPLETION. ENSURE ITEM OPERATES AS REQUIRED.

GENERAL DEMOLITION NOTES

A. CONTRACTOR SHALL IMMEDIATELY NOTIFY THE ARCHITECT OF ANY DISCREPANCIES WITHIN THE CONSTRUCTION DOCUMENTS OR ANY FIELD CONDITIONS WHICH DIFFER FROM THOSE DESCRIBED WITHIN THE DOCUMENTS.
B. ALL REQUIRED DEMOLITION IS INCLUDED IN THE GENERAL CONTRACT. DEMOLITION CONSISTS OF THE REMOVAL OF ANY EXISTING ELEMENT WHICH INTERFERES WITH THE COMPLETION OF NEW CONSTRUCTION OR TEMPORARY EGRESS MEASURES.
C. DEBRIS RESULTING FROM DEMOLITION SHALL BE REMOVED FROM THE CONSTRUCTION SITE ON A DAILY BASIS.
D. ALL SURFACES DISTURBED BY DEMOLITION, CUTTING OR PATCHING SHALL BE LEFT WITH A "CLEAN CUT" TO FACILITATE THE MATCHING OF EXISTING SURFACES WITH ADJACENT NEW CONSTRUCTION.
E. ANY DAMAGE TO EXISTING CONDITIONS CAUSED BY DEMOLITION AND/OR NEW WORK SHALL BE REPAIRED AS DETAILED, BY THE CONTRACTOR RESPONSIBLE FOR THE DAMAGE.
F. THE CONTRACTOR SHALL INSTALL TEMPORARY BARRIERS AS REQUIRED TO PREVENT THE SPREAD OF DUST AND FUMES TO AREAS NOT INCLUDED IN THE WORK.
G. THE CONTRACTOR SHALL MAINTAIN EMERGENCY EGRESS OF OCCUPANTS OF ADJACENT BUILDINGS AND TENANTS AT ALL TIMES.
H. THE CONTRACTOR SHALL COORDINATE WITH THE OWNER AND OBTAIN APPROVALS FOR ANY ACTIVITIES WHICH INVOLVE ANY UTILITY INTERRUPTIONS OR EXCESSIVE NOISE.
I. THE CONTRACTOR SHALL PROTECT ADJACENT EXISTING ROOF SURFACES FROM DAMAGE BY DEMOLITION AND CONSTRUCTION ACTIVITIES. ANY REPAIR ANY DAMAGE THAT OCCURS.
J. DO NOT STORE ANY MATERIALS ON ADJACENT ROOFS, AND LIMIT FOOT TRAFFIC TO THE EXTENT POSSIBLE.
K. DIMENSIONS SHOWN ON EXISTING PLANS ARE SHOWN AS A REFERENCE AND SHALL BE CONSIDERED +/- 8" EXACT DIMENSIONS ARE REQUIRED. FIELD MEASUREMENTS SHALL BE TAKEN BY THE CONTRACTOR.
L. ANY DUCT WORK SHOWN PASSING THROUGH A NEW OR EXISTING WALL CARRYING A FIRE RATING SHALL BE EQUIPPED WITH APPROPRIATE FIRE RATED DAMPERS AT THE POINT OF INTERSECTION WITH THE WALL.
M. ANY NEW OR EXISTING PIPING CONDUIT OR WIRING PASSING THROUGH A NEW OR EXISTING WALL CARRYING A FIRE RATING SHALL BE SEALED TIGHT TO THE WALL WITH A UL APPROVED METHOD.
N. ALL PEELING PAINT SHALL BE SCRAPED FROM EXISTING WALLS AND WALLS SHALL BE CLEANED PRIOR TO REPAINTING.
O. WHEN EXISTING PAINTED SURFACES ARE PATCHED IN VISIBLE AREAS, THE ENTIRE SURFACE OR WALL SHALL BE PAINTED TO ACHIEVE A UNIFORM APPEARANCE.
P. ALL HOLES IN MASONRY WALLS, EXISTING OR MADE BY THE REMOVAL OF ANY FIXTURES OR EQUIPMENT, SHALL BE PATCHED WITH MASONRY TO MATCH EXISTING. INSTALL NEW MASONRY FLUSH WITH EXISTING ON BOTH SIDES.
Q. REMOVE ALL WALL BRACKETS, PLASTIC SHIELDS, HOOKS, CLIPS, NAILS, TAPE AND SCREWS ON EXISTING WALLS IN PREPARATION FOR SMOOTH CLEAN SURFACE (TYPICAL AT SPACES WHERE NEW FINISH IS SCHEDULED).
R. ALL DEMOLITION SHALL BE PERFORMED TO PREVENT THE ARBITRARY DESTRUCTION OR INTERRUPTION OF CONCEALED UTILITIES WHICH ARE INTENDED TO REMAIN IN USE AND THE ROUTING OF WHICH CAN NOT BE PRE-DETERMINED UNTIL DEMOLITION IS STARTED. ALL SUCH DISCOVERIES OF UTILITIES WHICH ARE IN A DIFFERENT LOCATION FROM THAT INDICATED, CHANGE DIRECTION FROM FLOOR-TO-FLOOR, ETC. OR ARE UNIDENTIFIED, SHALL BE REPORTED TO THE ARCHITECT BEFORE REMOVAL OR DISTURBANCE.
S. REMOVE ALL WALL MOUNTED ACCESSORIES IN AREAS OF DEMOLITION AND RENOVATION. PATCH/REPAIR WALLS TO MAKE SMOOTH AND PREPARE FOR NEW WALL FINISH. REINSTALL ANY REUSED/RELOCATED WALL ACCESSORIES PER MANUFACTURER'S INSTRUCTIONS.
T. SEE MECHANICAL AND ELECTRICAL DRAWINGS FOR MORE INFORMATION ON DEMOLITION AND CONSTRUCTION TO REMAIN.
U. AT AREAS WHERE NEW SYSTEMS ARE INSTALLED ABOVE EXISTING ACOUSTICAL LAY-IN CEILINGS, REMOVE THE CEILING TILES AND STORE IN A LOCATION AS DIRECTED BY THE OWNER. REINSTALL THE TILE UPON COMPLETION OF THE SYSTEMS WORK. PROTECT TILES FROM DAMAGE, DIRT OR STAINING. REPLACE ANY TILE WHICH DOES GET DAMAGED, DIRTY OR STAINED WITH NEW TILES MATCHING THE TYPE OF THE ADJACENT EXISTING TILES.
V. REFER TO SPECIFICATIONS FOR ADDITIONAL REQUIREMENTS. WHERE GENERAL DEMOLITION NOTES DO NOT AGREE WITH SPECIFICATIONS, REFER DISCREPANCY TO ARCHITECT FOR RESOLUTION.
W. EXISTING ELEVATIONS AND LOCATIONS TO BE JOINED SHALL BE VERIFIED BY THE CONTRACTOR BEFORE CONSTRUCTION. SHOULD THEY DIFFER FROM THOSE SHOWN ON THE DRAWINGS, THE CONTRACTOR SHALL NOTIFY THE ARCHITECT SO THAT MODIFICATIONS CAN BE MADE BEFORE PROCEEDING WITH THE WORK.

TRUE NORTH
PROJECT NORTH

ssoe®
S&W

PROFESSIONAL SEALS:

SOUTH CAROLINA
SSOE, INC
No. 746
CERTIFICATE OF AUTHORIZATION

STATE OF SOUTH CAROLINA
WILLIAM J. FLEMING
Columbia, SC
No. 3402
REGISTERED ARCHITECT
8-6-2021

SUBMITTAL/REVISION SCHEDULE:

NO.	DATE	DESCRIPTION
	8.06.2021	CONSTRUCTION DOCUMENTS

■ APPROVED FOR CONSTRUCTION
□ NOT APPROVED FOR CONSTRUCTION

CLIENT INFORMATION:

SOUTH CAROLINA EDUCATION LOTTERY

South Carolina Education Lottery®

CLIENT PROJECT #:	20048.00
SCEL PROJECT #:	Y20-N001-CB

PROJECT INFORMATION:

4TH FLOOR UPFIT

1333 MAIN STREET, COLUMBIA, SOUTH CAROLINA

SSOE/SW PROJECT #:	021-00531-00
SSOE/SW MANAGER:	BILL FLEMING

SSOE | STEVENS & WILKINSON
1501 Main Street, Suite 730
Columbia, SC 29201
T. (803) 765-0320

THIS DRAWING IS THE PROPERTY OF SSOE | STEVENS & WILKINSON. UNAUTHORIZED USE OF ANY KIND, INCLUDING USE ON OTHER PROJECTS, IS PROHIBITED.
© SSOE, INC. 2021

LEVEL 4 DEMOLITION PLAN

AD1.41

C:\Autodesk\Revit\2004800 - Arch - SC Education Lottery Upfit - Adjusted Scope - V19.2_lbajarias@ssoe.com.rvt :FILE PATH
10/20/2021 3:08:42 PM :PRINT DATE

1 LEVEL 4 DEMOLITION RCP
1/4" = 1'-0"

DEMOLITION LEGEND

B01	KEYNOTE - SEE KEYNOTE LEGEND
	AREA OF "NO WORK"
	AREA OF DEMOLITION AS DESCRIBED
	CONSTRUCTION TO BE DEMOLISHED (PLAN) [SEE KEYNOTES FOR MORE DETAIL]
	EXISTING EXTERIOR CONSTRUCTION (PLAN)
	EXISTING INTERIOR NON-RATED CONSTRUCTION
	EXISTING INTERIOR 1 HOUR CONSTRUCTION
	EXISTING INTERIOR 2 HOUR CONSTRUCTION

DEMOLITION KEYNOTE LEGEND

KEYNOTE #	DESCRIPTION
CEILINGS & CEILING MOUNTED EQUIPMENT	
E01	REMOVE EXISTING GYPSUM BOARD CEILING COMPLETE INCLUDING ALL LIGHTS AND DIFFUSERS. PROTECT ANY SPRAY FIRE PROOFING ENCOUNTERED. PREPARE ADJACENT SURFACES TO REMAIN TO RECEIVE NEW FINISHES AS SPECIFIED. SEE MECHANICAL AND ELECTRICAL DRAWINGS FOR MORE INFORMATION.
CEILINGS & CEILING MOUNTED EQUIPMENT	
E02	REMOVE EXISTING ACOUSTICAL CEILING AND GRID SYSTEM COMPLETE, INCLUDING ALL LIGHTS AND DIFFUSERS. PROTECT ANY SPRAY FIRE PROOFING ENCOUNTERED. PREPARE ADJACENT SURFACES TO REMAIN TO RECEIVE NEW FINISHES AS SPECIFIED. SEE MECHANICAL AND ELECTRICAL DRAWINGS FOR MORE INFORMATION.
CEILINGS & CEILING MOUNTED EQUIPMENT	
E03	REMOVE EXISTING LIGHT FIXTURES COMPLETELY. SEE ELECTRICAL DRAWINGS FOR MORE INFORMATION.

GENERAL DEMOLITION NOTES

A. CONTRACTOR SHALL IMMEDIATELY NOTIFY THE ARCHITECT OF ANY DISCREPANCIES WITHIN THE CONSTRUCTION DOCUMENTS OR ANY FIELD CONDITIONS WHICH DIFFER FROM THOSE DESCRIBED WITHIN THE DOCUMENTS.
B. ALL REQUIRED DEMOLITION IS INCLUDED IN THE GENERAL CONTRACT. DEMOLITION CONSISTS OF THE REMOVAL OF ANY EXISTING ELEMENT WHICH INTERFERES WITH THE COMPLETION OF NEW CONSTRUCTION OR TEMPORARY EGRESS MEASURES.
C. DEBRIS RESULTING FROM DEMOLITION SHALL BE REMOVED FROM THE CONSTRUCTION SITE ON A DAILY BASIS.
D. ALL SURFACES DISTURBED BY DEMOLITION, CUTTING OR PATCHING SHALL BE LEFT WITH A "CLEAN CUT" TO FACILITATE THE MATCHING OF EXISTING SURFACES WITH ADJACENT NEW CONSTRUCTION.
E. ANY DAMAGE TO EXISTING CONDITIONS CAUSED BY DEMOLITION AND/OR NEW WORK SHALL BE REPAIRED AS DETAILED, BY THE CONTRACTOR RESPONSIBLE FOR THE DAMAGE.
F. THE CONTRACTOR SHALL INSTALL TEMPORARY BARRIERS AS REQUIRED TO PREVENT THE SPREAD OF DUST AND FUMES TO AREAS NOT INCLUDED IN THE WORK.
G. THE CONTRACTOR SHALL MAINTAIN EMERGENCY EGRESS OF OCCUPANTS OF ADJACENT BUILDINGS AND TENANTS AT ALL TIMES.
H. THE CONTRACTOR SHALL COORDINATE WITH THE OWNER AND OBTAIN APPROVALS FOR ANY ACTIVITIES WHICH INVOLVE ANY UTILITY INTERRUPTIONS OR EXCESSIVE NOISE.
I. THE CONTRACTOR SHALL PROTECT ADJACENT EXISTING ROOF SURFACES FROM DAMAGE BY DEMOLITION AND CONSTRUCTION ACTIVITIES. ANY REPAIR ANY DAMAGE THAT OCCURS.
J. DO NOT STORE ANY MATERIALS ON ADJACENT ROOFS, AND LIMIT FOOT TRAFFIC TO THE EXTENT POSSIBLE.
K. DIMENSIONS SHOWN ON EXISTING PLANS ARE SHOWN AS A REFERENCE AND SHALL BE CONSIDERED +/- 8" EXACT DIMENSIONS ARE REQUIRED. FIELD MEASUREMENTS SHALL BE TAKEN BY THE CONTRACTOR.
L. ANY DUCT WORK SHOWN PASSING THROUGH A NEW OR EXISTING WALL CARRYING A FIRE RATING SHALL BE EQUIPPED WITH APPROPRIATE FIRE RATED DAMPERS AT THE POINT OF INTERSECTION WITH THE WALL.
M. ANY NEW OR EXISTING PIPING CONDUIT OR WIRING PASSING THROUGH A NEW OR EXISTING WALL CARRYING A FIRE RATING SHALL BE SEALED TIGHT TO THE WALL WITH A UL APPROVED METHOD.
N. ALL PEELING PAINT SHALL BE SCRAPED FROM EXISTING WALLS AND WALLS SHALL BE CLEANED PRIOR TO REPAINTING.
O. WHEN EXISTING PAINTED SURFACES ARE PATCHED IN VISIBLE AREAS, THE ENTIRE SURFACE OR WALL SHALL BE PAINTED TO ACHIEVE A UNIFORM APPEARANCE.
P. ALL HOLES IN MASONRY WALLS, EXISTING OR MADE BY THE REMOVAL OF ANY FIXTURES OR EQUIPMENT, SHALL BE PATCHED WITH MASONRY TO MATCH EXISTING. INSTALL NEW MASONRY FLUSH WITH EXISTING ON BOTH SIDES.
Q. REMOVE ALL WALL BRACKETS, PLASTIC SHIELDS, HOOKS, CLIPS, NAILS, TAPE AND SCREWS ON EXISTING WALLS IN PREPARATION FOR SMOOTH CLEAN SURFACE (TYPICAL AT SPACES WHERE NEW FINISH IS SCHEDULED).
R. ALL DEMOLITION SHALL BE PERFORMED TO PREVENT THE ARBITRARY DESTRUCTION OR INTERRUPTION OF CONCEALED UTILITIES WHICH ARE INTENDED TO REMAIN IN USE AND THE ROUTING OF WHICH CAN NOT BE PRE-DETERMINED UNTIL DEMOLITION IS STARTED. ALL SUCH DISCOVERIES OF UTILITIES WHICH ARE IN A DIFFERENT LOCATION FROM THAT INDICATED, CHANGE DIRECTION FROM FLOOR-TO-FLOOR, ETC. OR ARE UNIDENTIFIED, SHALL BE REPORTED TO THE ARCHITECT BEFORE REMOVAL OR DISTURBANCE.
S. REMOVE ALL WALL MOUNTED ACCESSORIES IN AREAS OF DEMOLITION AND RENOVATION. PATCH/REPAIR WALLS TO MAKE SMOOTH AND PREPARE FOR NEW WALL FINISH. REINSTALL ANY REUSED/RELOCATED WALL ACCESSORIES PER MANUFACTURER'S INSTRUCTIONS.
T. SEE MECHANICAL AND ELECTRICAL DRAWINGS FOR MORE INFORMATION ON DEMOLITION AND CONSTRUCTION TO REMAIN.
U. AT AREAS WHERE NEW SYSTEMS ARE INSTALLED ABOVE EXISTING ACOUSTICAL LAY-IN CEILINGS, REMOVE THE CEILING TILES AND STORE IN A LOCATION AS DIRECTED BY THE OWNER. REINSTALL THE TILE UPON COMPLETION OF THE SYSTEMS WORK. PROTECT TILES FROM DAMAGE, DIRT OR STAINING. REPLACE ANY TILE WHICH DOES GET DAMAGED, DIRTY OR STAINED WITH NEW TILES MATCHING THE TYPE OF THE ADJACENT EXISTING TILES.
V. REFER TO SPECIFICATIONS FOR ADDITIONAL REQUIREMENTS. WHERE GENERAL DEMOLITION NOTES DO NOT AGREE WITH SPECIFICATIONS, REFER DISCREPANCY TO ARCHITECT FOR RESOLUTION.
W. EXISTING ELEVATIONS AND LOCATIONS TO BE JOINED SHALL BE VERIFIED BY THE CONTRACTOR BEFORE CONSTRUCTION. SHOULD THEY DIFFER FROM THOSE SHOWN ON THE DRAWINGS, THE CONTRACTOR SHALL NOTIFY THE ARCHITECT SO THAT MODIFICATIONS CAN BE MADE BEFORE PROCEEDING WITH THE WORK.

ssoe®
S&W

PROFESSIONAL SEALS:

SOUTH CAROLINA CERTIFICATE OF AUTHORIZATION SSOE, INC No. 746

STATE OF SOUTH CAROLINA WILLIAM J. FLEMING Columbia SC No. 3452 REGISTERED ARCHITECT
8-6-2021

SUBMITTAL/REVISION SCHEDULE:

NO.	DATE	DESCRIPTION
	8.06.2021	CONSTRUCTION DOCUMENTS

■ APPROVED FOR CONSTRUCTION
□ NOT APPROVED FOR CONSTRUCTION

CLIENT INFORMATION:

SOUTH CAROLINA EDUCATION LOTTERY

South Carolina Education Lottery®

CLIENT PROJECT #:	20048.00
SCEL PROJECT #:	Y20-N001-CB

PROJECT INFORMATION:

4TH FLOOR UPFIT

1333 MAIN STREET, COLUMBIA, SOUTH CAROLINA

SSOE/SW PROJECT #:	021-00531-00
SSOE/SW MANAGER:	BILL FLEMING

SSOE | STEVENS & WILKINSON
1501 Main Street, Suite 730
Columbia, SC 29201
T. (803) 765-0320

THIS DRAWING IS THE PROPERTY OF SSOE | STEVENS & WILKINSON. UNAUTHORIZED USE OF ANY KIND, INCLUDING USE ON OTHER PROJECTS, IS PROHIBITED.
© SSOE, INC. 2021

LEVEL 4 DEMOLITION REFLECTED CEILING PLAN

AD6.41

C:\Autodesk\Revit\2004800 - Arch - SC Education Lottery Upfit - Adjusted Scope - V19.2_lbajarias@ssoe.com.rvt :FILE PATH
10/20/2021 3:08:44 PM :PRINT DATE

PARTITION TYPE IDENTIFICATION LEGEND & NOTES

PARTITION TAG LEGEND

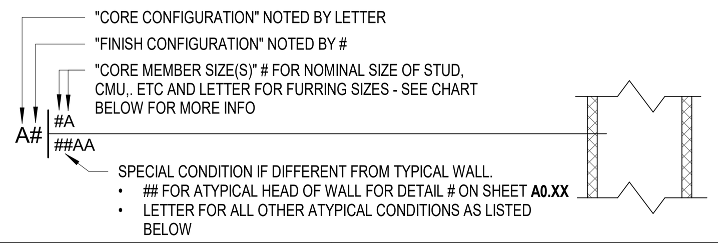

"CORE CONFIGURATION"

F FC
G MS (FINISH ONE SIDE)
M MS (FINISH TWO SIDES)
MX MS (FINISH TWO SIDES) - EXISTING

"FINISH CONFIGURATION"

1	I I + GWB (1)	or	GWB (1) + I I + GWB (1)
2	I I + GWB (2)	or	GWB (2) + I I + GWB (2)
3	I I + GWB (3)	or	GWB (3) + I I + GWB (3)
4	GWB (1) + I I + GWB (2)		
5	GWB (1) + I I + GWB (3)		
6	GWB (2) + I I + GWB (3)		
7	GWB (2) + I I + GWB (1)		
8	GWB (3) + I I + GWB (1)		
9	GWB (3) + I I + GWB (2)		

ABBREVIATIONS

I I	=	"CORE"
(#)	=	NUMBER OF LAYERS OF GWB
CIP	=	CAST-IN-PLACE CONCRETE
CMU	=	CONCRETE MASONRY UNIT
FC	=	STUD FURRING (TYPE AS SCHEDULED)
GSL	=	GYPSUM SHAFT LINER
GWB	=	GYPSUM WALLBOARD, TYPE AS SCHEDULED
HF	=	HAT-SHAPED METAL FURRING
MS	=	METAL STUD FRAMING
MF	=	METAL STUD FURRING
MSS	=	METAL SHAFTWALL STUD FRAMING
RC	=	RESILIENT CHANNEL
WS	=	WOOD STUD FRAMING
WF	=	WOOD FURRING
ZF	=	METAL Z-FURRING

PARTITION - "CORE MEMBER SIZE"

METAL STUDS	
NOMINAL	ACTUAL
1	1 5/8"
2	2 1/2"
3	3 5/8"
4	4"
6	6"
8	8"

METAL STUD FURRING (MSF)		
CALLOUT	TYPE	SIZE (DEPTH ONLY)
A	HF	7/8"
B	HF	1 1/2"
C	RC	1/2"
D	ZF	1"
E	ZF	1 1/2"
F	ZF	2"
G	ZF	2 1/2"
H	MSF	3/4"
J	MSF	1"
K	MSF	1 1/2"
L	MSF	2"

1. CAST-IN-PLACE CONCRETE "STRUCTURAL MEMBER SIZE IS DIMENSIONED AT PLANS, SEE STRUCTURAL DWGS FOR MORE INFORMATION.
2. RESILIENT CHANNEL IS 1/2" DEEP, SEE SPECIFICATIONS FOR LENGTH AND TYPE
3. FOR ALL METAL STUD FURRING, ONLY DEPTH IS NOTED. SEE SPECIFICATION FOR ALL OTHER SIZE AND GAUGE REQUIREMENTS. FURRING LEGS SHALL BE OF DIMENSION ADEQUATE TO MEET PERFORMANCE AND FASTENING REQUIREMENTS.

PARTITION - "RATING" - CALLED OUT ON LIFE SAFETY PLANS

SP	SMOKE PARTITION
SB	SMOKE BARRIER
5P	30 MINUTE FIRE PARTITION
1B	1 HOUR FIRE BARRIER
1P	1 HOUR FIRE PARTITION
1W	1 HOUR FIRE WALL
2B	2 HOUR FIRE BARRIER
2P	2 HOUR FIRE PARTITION
2W	2 HOUR FIRE WALL
3B	3 HOUR FIRE BARRIER
3P	3 HOUR FIRE PARTITION
3W	3 HOUR FIRE WALL

PARTITION - "HEAD CONDITION"

1. ALL RATED WALLS ARE TO UNDERSIDE OF DECK.
2. ALL ACOUSTICAL WALLS ARE TO UNDERSIDE OF DECK.
3. SEE PARTITION TYPE DETAILS FOR TYPICAL HEAD OF WALL CONDITION. IF HEAD OF WALL CONDITION IS ATYPICAL, NUMBER NOTED IN PARTITION TYPE TAG IN SPECIAL CONDITIONS AREA OF TAG CORRESPONDS TO DETAIL # ON HEAD OF WALL CONDITION DETAILS ON SHEET **A0.50**

PARTITION - "SPECIAL CONDITION"

FOR ALL OTHER ATYPICAL CONDITIONS, LETTER CORRESPONDS TO LIST BELOW:

A. NOT USED
B. NOT USED
C. STUD AND GWB TO 6" ABOVE HIGHEST ADJACENT CEILING.
D. NOT USED
E. EXTEND EXISTING WALL STUD & BOTH SIDES OF GWB TO UNDERSIDE OF DECK. SEAL ALONG BOTH SIDES OF TOP OF GWB TO PREVENT FUMES AND ODORS IN THE PRINT ROOM FROM INFILTRATING ADJACENT ROOMS AND CORRIDORS. SEE WALL PARTITION ON 5/A0.50 FOR DETAILS.
F. STUD AND GWB TO EXTEND TO UNDERSIDE OF CEILING. TOP OF WALL TO BE CAPPED WITH GWB. SEE HEAD DETAIL #4 ON A0.50. LIGHT GAUGE MFR.'S ENGINEER OF RECORD TO DESIGN WALL TO MEET PERFORMANCE CRITERIA AS DETAILED AT GENERAL NOTES ON A0.10. IF REQUIRED, PROVIDE STRUCTURAL STEEL TUBE POST TO PROVIDE ADDITIONAL SUPPORT FOR WALL.
G. STUD AND GWB TO EXTEND TO UNDERSIDE OF DECK. SEE HEAD DETAIL #5 ON A0.50.

GENERAL NOTES: STUD CONSTRUCTION

1. BASIS OF DESIGN: *STEEL FRAMED PARTITIONS*
DESIGN IS BASED ON GUIDELINES INCLUDED IN PRODUCT TECHNICAL INFORMATION OF THE STEEL MANUFACTURE'S ASSOCIATION LATEST EDITION OF THE SSMA PUBLICATION AND THE FOLLOWING PERFORMANCE CRITERIA:

A. LIMITING HEIGHT CRITERIA:
DEFLECTION OF **L/240** AT **5 LBS. PER SQ. FT.** CONSTANT AIR-PRESSURE LOADS

B. THICKNESS-STEEL COMPONENTS:

GAUGE	DESIGN THICKNESS
22	0.0283
20	0.0346
18	0.0451

2. MINIMUM GAUGE:
IF LIMITING HEIGHT AS SCHEDULED IN PARTITION DETAILS EXCEEDS PROJECT CONDITIONS OR IF THE SELECTED STEEL STUD MANUFACTURE'S THICKNESS OF STEEL COMPONENTS VARIES FROM THE BASIS OF DESIGN AS SET FORTH ABOVE, PROVIDE MANUFACTURE'S STANDARD THICKNESS (GAUGE) THAT MEETS OR EXCEEDS LIMITING HEIGHT PERFORMANCE CRITERIA FOR STUD DEPTH AND SPACING INDICATED.

3. DOOR JAMBS
PROVIDE DOUBLE 20 GA. STUDS AT ALL DOOR OPENINGS, EXTEND FROM FLOOR TO STRUCTURE ABOVE. TYPICAL FOR ALL DOORS IN METAL STUD WALLS.

GENERAL NOTES: FIRE RATED ASSEMBLIES

1. ALL FIRE-RATED ASSEMBLIES TO EXTEND FROM TOP OF SLAB TO UNDERSIDE OF STRUCTURE. SEAL TOP OF ASSEMBLY TO THE UNDERSIDE OF METAL DECK OR STEEL BEAM AS REQUIRED TO ACHIEVE FIRE PROTECTION RATING.
2. AT GWB/STUD FIRE RATED ASSEMBLIES, INSTALL FRAMING AND GYPSUM WALL BOARD TO OFFSET AROUND STRUCTURAL MEMBERS OR OTHER OBSTRUCTIONS TO MAINTAIN ACOUSTICAL OR FIRE RATINGS (IF ACOUSTICAL PARTITION IS ALSO FIRE-RATED). SEE DETAILS AT SHEET **A0.50**.
3. SEAL BOTTOM OF WALL TO CONCRETE SLAB TO ACHIEVE FIRE PROTECTION RATING. SEE DETAILS AT SHEET **A0.50**.
4. REFER TO SPECIFICATIONS FOR FIRE-RATED JOINT SYSTEMS FOR FIRE-RATED SEALANTS AND FIRESTOP CAULKING.
5. INSTALL FRAMING AND GWB TO OFFSET AROUND STRUCTURAL MEMBERS OR OTHER PENETRATIONS OF FIRE-RATED ASSEMBLIES TO MAINTAIN FIRE RESISTIVE RATINGS PER UL APPROVED DETAIL.

ASSEMBLY PRIORITY LEGEND

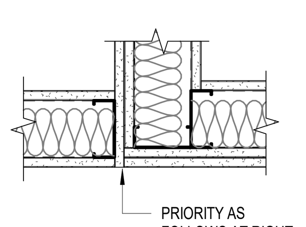

PROVIDE RATED ASSEMBLIES IN ACCORDANCE WITH UL LISTING, MFR. INSTRUCTIONS & APPROVED DETAILS INDICATING HOURS OF FIRE RESISTANCE. REFER TO LIFE SAFETY PLANS, PLANS & ENLARGED PLANS FOR PARTITION TYPES, LOCATIONS & EXTENT OF RATED WALLS.

PRIORITY OF RATED ASSEMBLIES:

• TWO HOUR FIRE & SMOKE WALL	PRIORITY 1 - HIGHEST
• TWO HOUR FIRE WALL	PRIORITY 2
• TWO HOUR SHAFT WALL	PRIORITY 3
• ONE HOUR FIRE & SMOKE WALL	PRIORITY 4
• ONE HOUR FIRE WALL	PRIORITY 5
• ONE HOUR SHAFT WALL	PRIORITY 6
• NON-RATED	PRIORITY 7 - LOWEST

GENERAL NOTES - FIRE RATED STENCIL

1. APPLY PARTITION LABELS ABOVE THE CEILING ON ALL RATED AND SMOKE TIGHT ASSEMBLIES. LABEL AS PER ASSEMBLY RATING.
2. COLOR TO BE BRIGHT RED. MINIMUM TEXT SIZE AS REQUIRED BY LOCAL AUTHORITIES HAVING JURISDICTION.
3. APPLY LABEL AT BEGINNING AND END OF EACH LENGTH OF ASSEMBLY AND APPLY LABEL INTERMITTENTLY BETWEEN END/BEGINNING AT MINIMUM SPACING OF 12'-0" O.C.
4. ARROWS TO BE CONTINUOUS AROUND ASSEMBLY.
5. FIRE/SMOKE DAMPER ACCESS AND OTHER MECHANICAL ELEMENTS SHALL BE IDENTIFIED AS PER ***IBC 2018 SECTION 717.4***. ALL OTHER IDENTIFIERS SHALL BE IN COMPLIANCE WITH THE IBC AND ALL OTHER APPLICABLE CODES AND MUNICIPALITY REQUIREMENTS.
6. REPAIR/PATCH EXISTING FIRE RATED PARTITION LABELS AS NECESSARY
7. PAINT OVER EXISTING FIRE RATED PARTITION LABELS AND ARROWS SO AS TO COMPLETELY COVER ALL INDICATION OF A FIRE RATING FOR ASSEMBLIES THAT WILL NOT RETAIN A FIRE RATING IN THE PROPOSED NEW DESIGN.

FIRE RATED STENCIL DETAIL

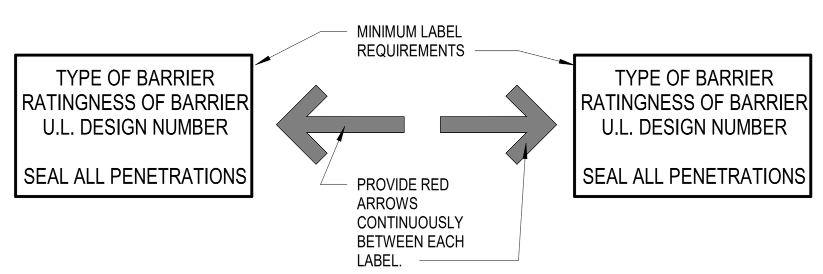

GENERAL NOTES: GYPSUM WALLBOARD

1. DO NOT INSTALL GYPSUM WALLBOARD IN DIRECT CONTACT WITH THE FLOOR. ALL GWB SHALL BE SHIMMED 1/2" ABOVE FLOOR SLAB WITH NON-POROUS SHIM. PLASTIC NON-POROUS HORSESHOE SHIMS ARE RECOMMENDED; GYPSUM WALLBOARD SHIMS ARE NOT ACCEPTABLE. PROVIDE BACKER ROD & CONTINUOUS ACOUSTICAL OR FIRE RATED SEALANT TOOLED FOR HOURGLASS SHAPE PER MFR'S RECOMMENDATIONS.
2. WHERE GYPSUM WALL BOARD EXTENDS TO THE UNDERSIDE OF STRUCTURE, STOP GYPSUM WALL BOARD 1/2" BELOW LINE OF STRUCTURE AND SEAL AS REQUIRED.
3. TYPICAL AT ALL INTERIOR PARTITIONS, GYPSUM WALLBOARD TO BE 5/8" TYPE "X" UNLESS NOTED OTHERWISE AT PARTITION TYPE MODIFIER OR AS SCHEDULED IN SPECIFICATION.
4. TYPICAL AT ALL EXTERIOR PERIMETER WALLS, INSTALL 5/8" TYPE "X" MOLD AND MOISTURE RESISTANT GYPSUM WALLBOARD.
5. STAGGER JOINTS AT INSTALLATIONS OF MULTIPLE LAYERS OF GYPSUM WALLBOARD.

GENERAL NOTES: GYPSUM WALLBOARD REVEALS

1. STANDARD, WHERE INDICATED IN THESE DOCUMENTS, PROVIDE REVEALS OF TYPE AND SIZE INDICATED AS SPECIFIED.
2. ELEVATIONS MAY NOT SHOW ALL FACES OF COLUMNS OR FACES OF EVERY WALL - G.C. SHALL ASSUME THAT ALL REVEALS WILL RETURN TO INSIDE CORNER UNLESS OTHERWISE NOTED.
3. AT ALL INTERSECTIONS OF VERTICAL AND HORIZONTAL REVEALS, PROVIDE FACTORY FABRICATED INTERSECTIONS AND CORNERS.

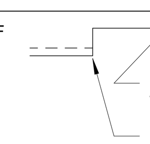

GENERAL NOTES: NON-RATED & ACOUSTICAL PARTITIONS/ASSEMBLIES

1. ALL INTERIOR PARTITIONS TO EXTEND 6" ABOVE CEILING HEIGHT UNLESS NOTED OTHERWISE BY PARTITION TYPE HEAD CONDITION SCHEDULE. SEE PLAN FOR PARTITION IDENTIFICATION.
2. ALL ACOUSTIC PARTITIONS TO EXTEND FROM TOP OF SLAB TO UNDERSIDE OF STRUCTURE. SEAL TOP AND BOTTOM TYPICAL TO THE UNDERSIDE OF METAL DECK OR STEEL BEAM AS REQUIRED TO ACHIEVE ACOUSTIC OR FIRE PROTECTION RATING. SEE DETAILS AT SHEET **A0.50**. INSTALL FRAMING AND GYPSUM WALL BOARD TO OFFSET AROUND STRUCTURAL MEMBERS OR OTHER OBSTRUCTIONS TO MAINTAIN ACOUSTICAL OR FIRE RATINGS (IF ACOUSTICAL PARTITION IS ALSO FIRE-RATED).
3. ALL INTERIOR METAL STUD PARTITIONS TO HAVE SOUND BATTS INSULATION UNLESS NOTED OTHERWISE BY PARTITION MODIFIER. AT 3 5/8" STUD CAVITIES, PROVIDE 3 1/2" SOUND BATTS. AT 6" OR 8" STUD CAVITIES PROVIDE 5 1/2" SOUND BATTS.
4. ALL PARTITIONS CONTAINING PLUMBING PIPING SHALL BE THERMALLY INSULATED WITH MINERAL WOOL.
5. THE FOLLOWING LIST OF ROOMS (IF USED) SHALL HAVE THEIR PERIMETER PARTITIONS INSULATED USING MINERAL WOOL: ELECTRICAL ROOMS, MECHANICAL ROOMS, AV EQUIPMENT ROOMS, DATA OR TELECOM ROOMS, SPRINKLER RISER ROOMS AND FIRE PUMP ROOMS.
6. WHERE NOTED, PROVIDE RESILIENT CHANNELS AT CORRIDOR SIDE OF WALL. SEE PARTITION TYPE DETAILS AND SPECIFICATIONS FOR INSTALLATION GUIDELINES.

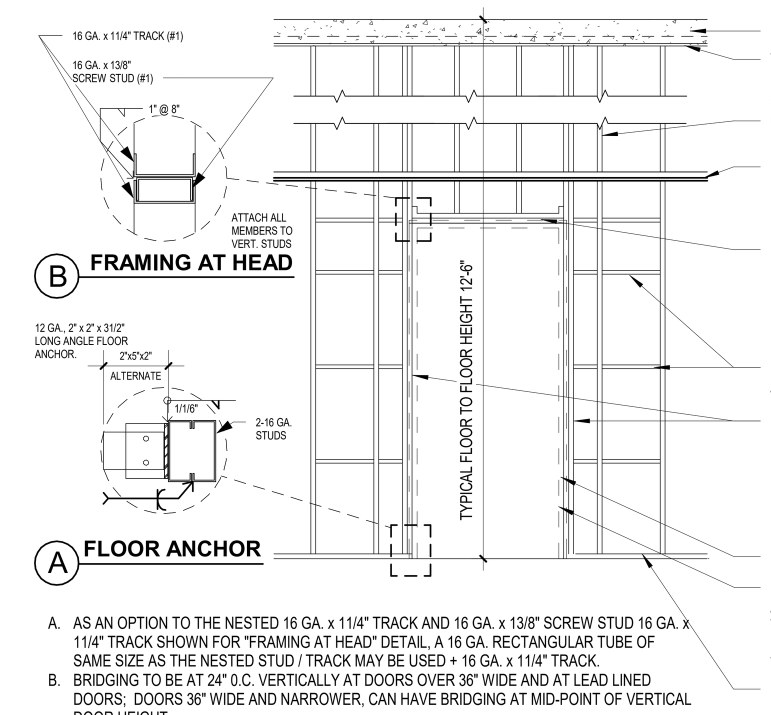

A. AS AN OPTION TO THE NESTED 16 GA. x 11/4" TRACK AND 16 GA. x 13/8" SCREW STUD 16 GA. x 11/4" TRACK SHOWN FOR "FRAMING AT HEAD" DETAIL, A 16 GA. RECTANGULAR TUBE OF SAME SIZE AS THE NESTED STUD / TRACK MAY BE USED + 16 GA. x 11/4" TRACK.
B. BRIDGING TO BE AT 24" 0.C. VERTICALLY AT DOORS OVER 36" WIDE AND AT LEAD LINED DOORS; DOORS 36" WIDE AND NARROWER, CAN HAVE BRIDGING AT MID-POINT OF VERTICAL DOOR HEIGHT.

3 GENERAL - DOOR FRAMING REINFORCING
1" = 1'-0"

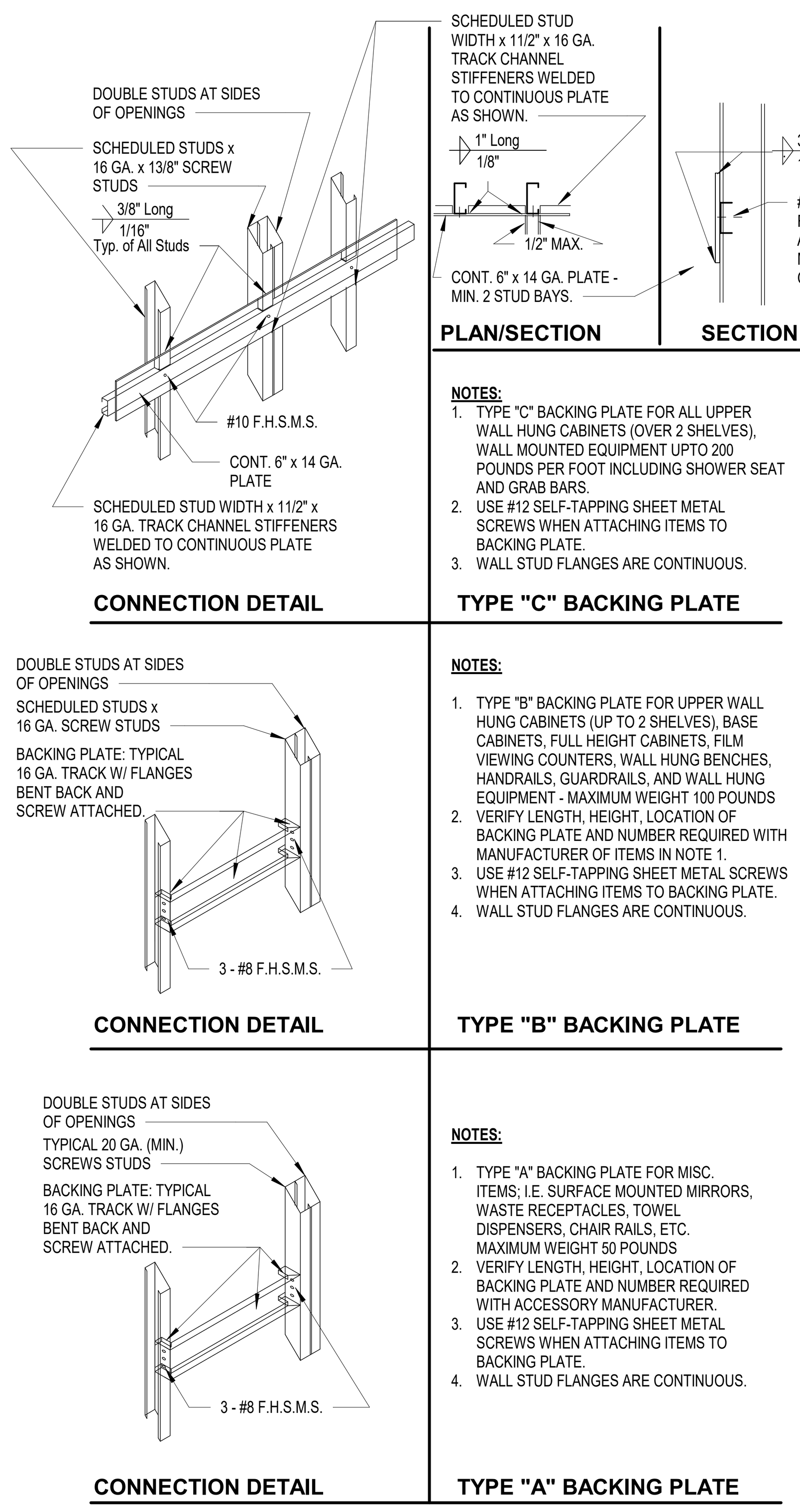

TYPE "C" BACKING PLATE

NOTES:
1. TYPE "C" BACKING PLATE FOR ALL UPPER WALL HUNG CABINETS (OVER 2 SHELVES), WALL MOUNTED EQUIPMENT UPTO 200 POUNDS PER FOOT INCLUDING SHOWER SEAT AND GRAB BARS.
2. USE #12 SELF-TAPPING SHEET METAL SCREWS WHEN ATTACHING ITEMS TO BACKING PLATE.
3. WALL STUD FLANGES ARE CONTINUOUS.

TYPE "B" BACKING PLATE

NOTES:
1. TYPE "B" BACKING PLATE FOR UPPER WALL HUNG CABINETS (UP TO 2 SHELVES), BASE CABINETS, FULL HEIGHT CABINETS, FILM VIEWING COUNTERS, WALL HUNG BENCHES, HANDRAILS, GUARDRAILS, AND WALL HUNG EQUIPMENT - MAXIMUM WEIGHT 100 POUNDS
2. VERIFY LENGTH, HEIGHT, LOCATION OF BACKING PLATE AND NUMBER REQUIRED WITH MANUFACTURER OF ITEMS IN NOTE 1.
3. USE #12 SELF-TAPPING SHEET METAL SCREWS WHEN ATTACHING ITEMS TO BACKING PLATE.
4. WALL STUD FLANGES ARE CONTINUOUS.

TYPE "A" BACKING PLATE

NOTES:
1. TYPE "A" BACKING PLATE FOR MISC. ITEMS; I.E. SURFACE MOUNTED MIRRORS, WASTE RECEPTACLES, TOWEL DISPENSERS, CHAIR RAILS, ETC. MAXIMUM WEIGHT 50 POUNDS
2. VERIFY LENGTH, HEIGHT, LOCATION OF BACKING PLATE AND NUMBER REQUIRED WITH ACCESSORY MANUFACTURER.
3. USE #12 SELF-TAPPING SHEET METAL SCREWS WHEN ATTACHING ITEMS TO BACKING PLATE.
4. WALL STUD FLANGES ARE CONTINUOUS.

6 BACKING PLATE AND CONNECTION DETAILS
1" = 1'-0"

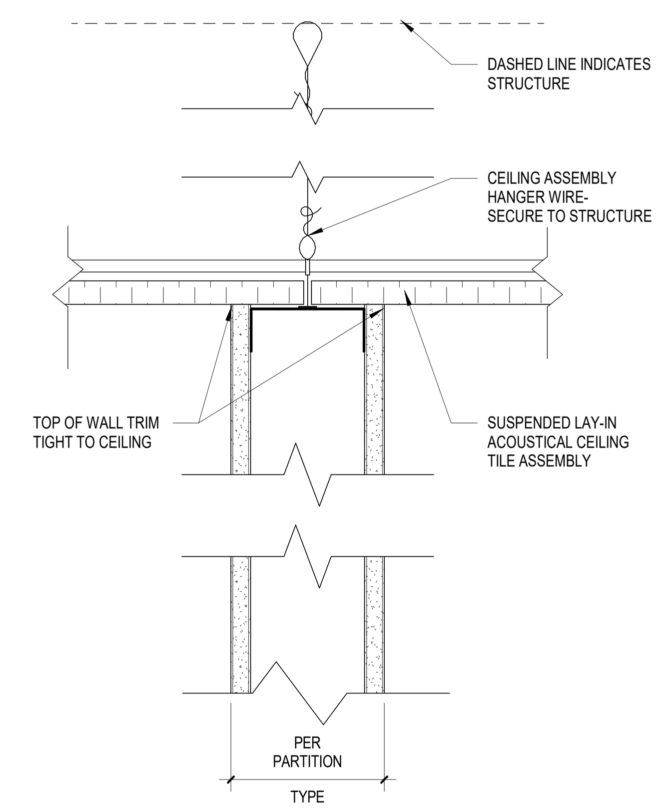

4 PARTIAL HEIGHT WALL
3" = 1'-0"

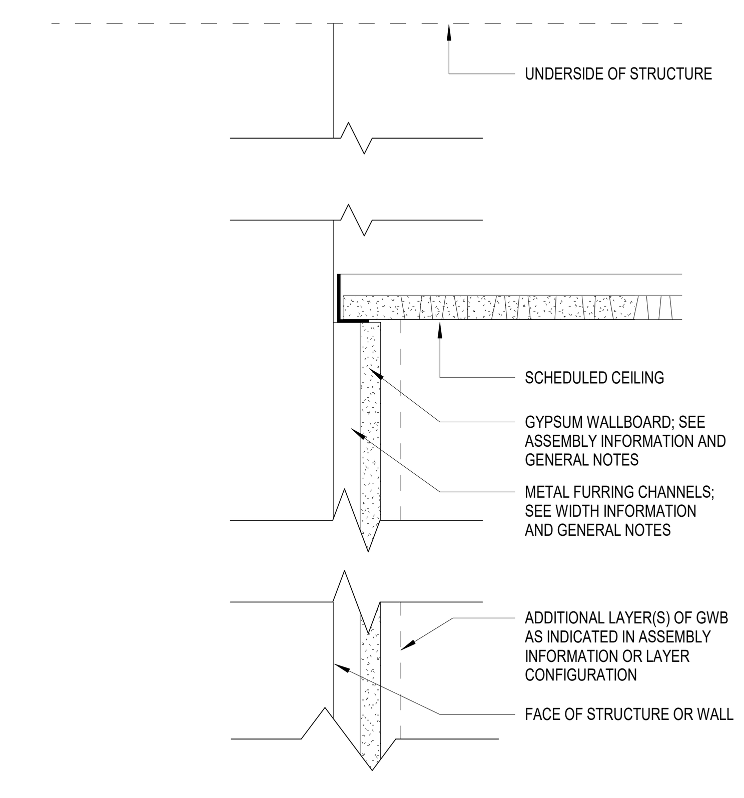

1 PARTIAL HEAD DTL - F - TO UNDERSIDE OF CEILING
3" = 1'-0"

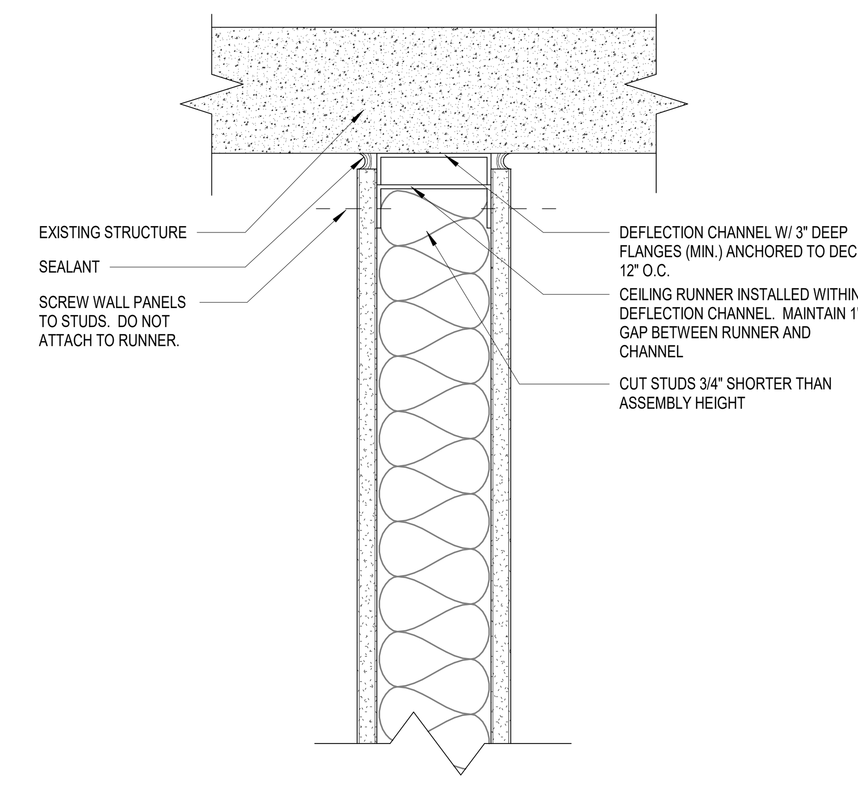

5 TOP OF WALL TO UNDERSIDE OF DECK
3" = 1'-0"

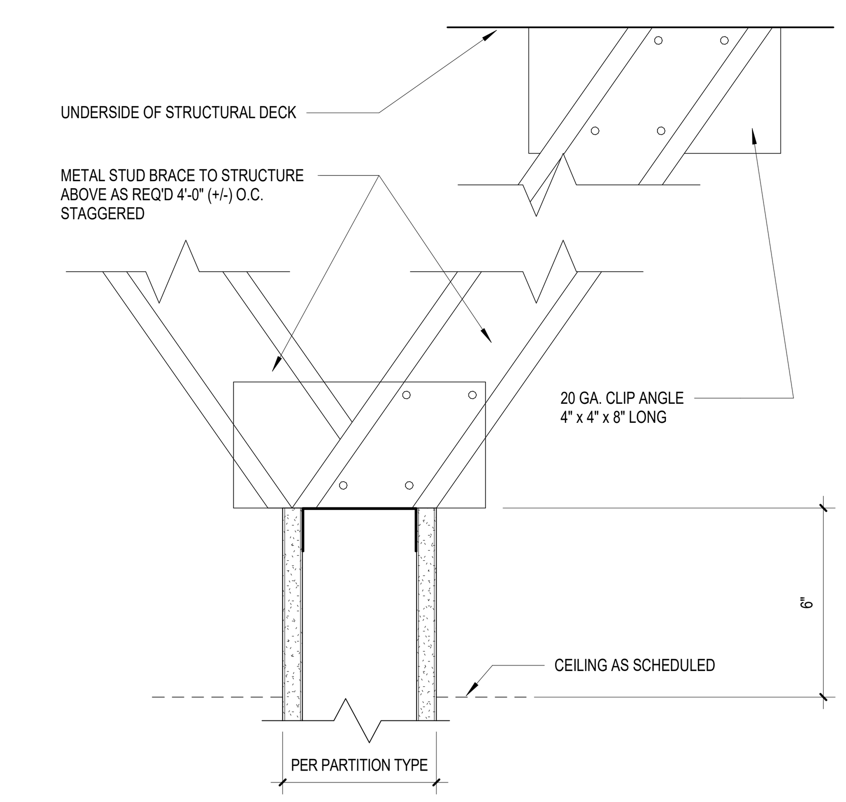

2 PARTIAL HEAD DTL - M1 - STUD/GWB TO 6" ABOVE CEILING
3" = 1'-0"

M1

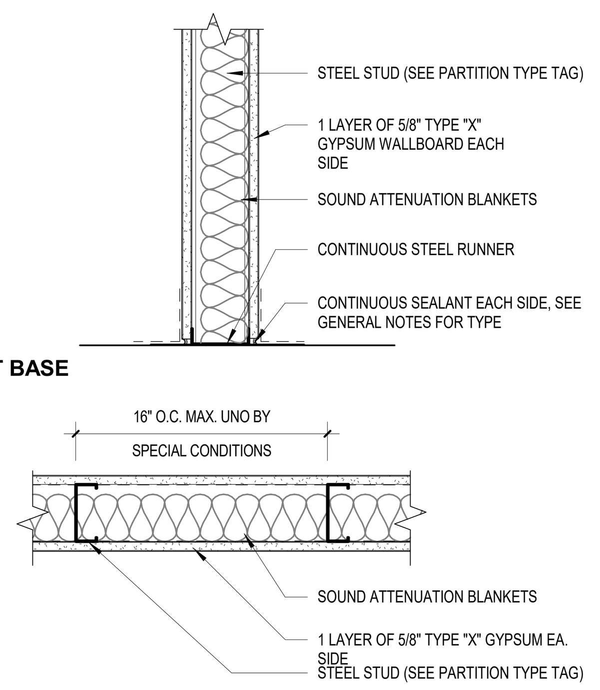

PLAN DETAIL

G1

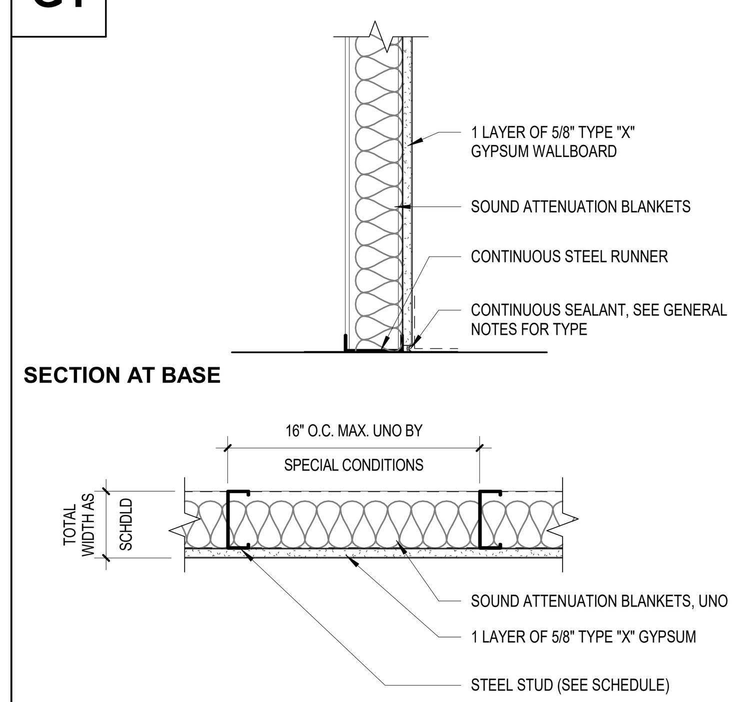

PLAN DETAIL

F1

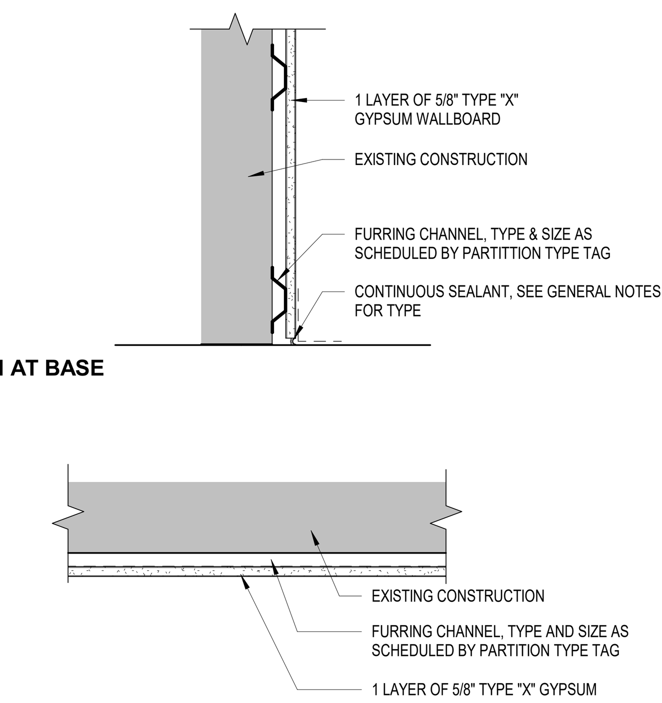

PLAN DETAIL

SSOE
S&W

PROFESSIONAL SEALS:
SOUTH CAROLINA SSOE, INC No. 746 CERTIFICATE OF AUTHORIZATION
STATE OF SOUTH CAROLINA WILLIAM J. FLEMING Columbia, SC No. 3209 REGISTERED ARCHITECT
8.6.2021

SUBMITTAL/REVISION SCHEDULE:

NO.	DATE	DESCRIPTION
	8.06.2021	CONSTRUCTION DOCUMENTS

■ APPROVED FOR CONSTRUCTION
□ NOT APPROVED FOR CONSTRUCTION

CLIENT INFORMATION:

SOUTH CAROLINA EDUCATION LOTTERY

South Carolina Education Lottery ®

CLIENT PROJECT #:	20048.00
SCEL PROJECT #:	Y20-N001-CB

PROJECT INFORMATION:

4TH FLOOR UPFIT

1333 MAIN STREET, COLUMBIA, SOUTH CAROLINA

SSOE/SW PROJECT #:	021-00531-00
SSOE/SW MANAGER:	BILL FLEMING

SSOE | STEVENS & WILKINSON
1501 Main Street, Suite 730
Columbia, SC 29201
T. (803) 765-0320

THIS DRAWING IS THE PROPERTY OF SSOE | STEVENS & WILKINSON. UNAUTHORIZED USE OF ANY KIND, INCLUDING USE ON OTHER PROJECTS, IS PROHIBITED.
© SSOE, INC. 2021

PARTITION TYPES & DETAILS

A0.50

C:\Autodesk\Revit\2004800 - Arch - SC Education Lottery Upfit - Adjusted Scope - V19.2_lbajarias@ssoe.com.rvt :FILE PATH
10/20/2021 3:08:26 PM :PRINT DATE

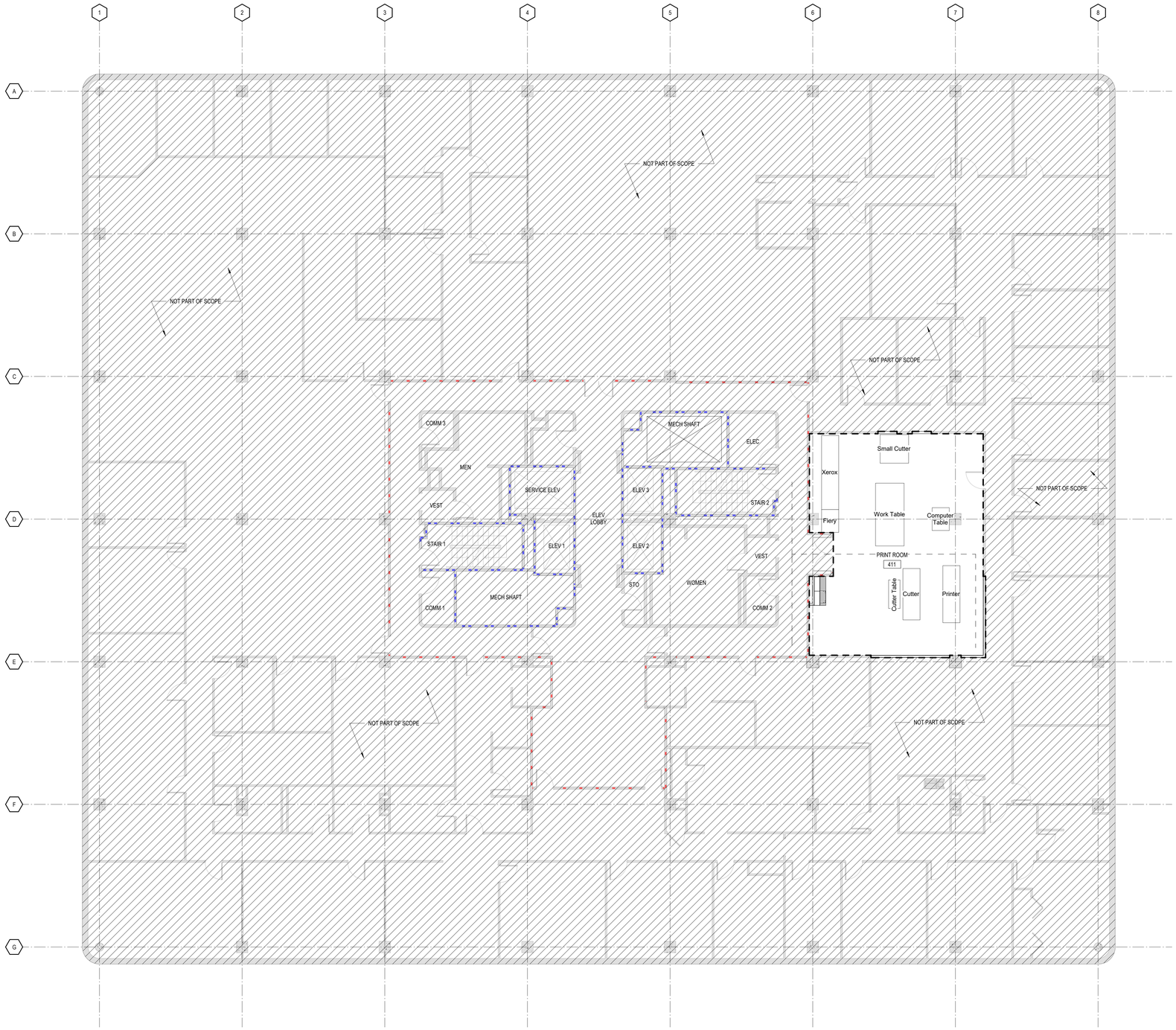

1 4TH FLOOR OVERALL PLAN
1/8" = 1'-0"

GENERAL FLOOR PLAN NOTES

1. ACCESS DOORS SHALL BE INSTALLED IN WALLS AT ALL EQUIPMENT, VALVE OR OTHER LOCATIONS REQUIRING ACCESS FOR MAINTENANCE WHICH ARE LOCATED BEHIND FINISHED SURFACES. SEE SPECIFICATIONS FOR SPECIFIC REQUIREMENTS AND DIRECTIONS.
2. INSTALL GYPSUM WALLBOARD CONTROL JOINTS IN ACCORDANCE WITH ASTM C-840. (WHERE A PARTITION'S LENGTH RUNS IN AN UNINTERRUPTED STRAIGHT PLAN EXCEEDING 30 LINEAR FEET, CONTROL JOINTS SHALL BE INSTALLED 30'-0" ON CENTER MAXIMUM. INSTALL CONTROL JOINTS ALIGNED WITH DOOR JAMBS AND OR EDGE OF SOFFITS WHERE-EVER POSSIBLE. ALL GWB CONTROL JOINT LOCATIONS FOR WALLS AND SOFFITS SHALL MARKED UP ON SHOP DRAWINGS AND SUBMITTED TO THE ARCHITECT FOR APPROVAL PRIOR TO INSTALLATION.
3. WHERE ADJACENT WALLS HAVE DISSIMILAR # OF LAYERS OF GWB, INSTALL FINAL LAYERS OF GWB FLUSH.

DRAWING CONVENTIONS LEGEND

- EXISTING CONSTRUCTION
- NEW NON RATED METAL STUDS CONSTRUCTION
- EXISTING 1 HOUR RATED METAL STUDS CONSTRUCTION
- EXISTING 2 HOUR RATED METAL STUDS CONSTRUCTION
- CENTERLINE
- BUILDING ELEMENTS ABOVE
- 23.4 — EXISTING COLUMN GRID REFERENCE
- ALIGN — ALIGNMENT REFERENCE

REFERENCE CONVENTIONS

LEVEL 1 / 0'-0" — NAME OF ELEVATION/LEVEL; PROJECT ELEVATION

ELEVATION (FLOOR/LEVEL) REFERENCE

Name / 150 SF / 101 / 500 / ZONE — NAME (AT OCCUPANT COUNT PLANS AND LIFE SAFETY PLANS, THIS IS THE OCCUPANT LOAD FACTOR TYPE); SQUARE FOOTAGE; NUMBER (IF USED); OCCUPANT LOAD COUNT (IF USED); ZONE (IF USED)

AREA REFERENCE

Room name / 101 / 150 SF — ROOM NAME; ROOM NUMBER; AREA (IF USED)

ROOM REFERENCE

A## — CORE AND FINISH CONFIGURATION; CORE AND FINISH SIZE; SPECIAL CONDITIONS (IF USED)

4W — PARTITION RATING *NOTED ON LIFE SAFETY PLANS

*SEE PARTITION SHEET FOR MORE INFO

PARTITION TYPE IDENTIFICATION

GWB@20'-4" — CEILING ELEVATION; CEILING MATERIAL

20'-4 1/2" — CEILING ELEVATION

CEILING TYPE IDENTIFICATION

DOOR # - SEE DOOR SCHEDULE

60 — DOOR & FRAME RATING IN MINUTES

DOOR IDENTIFICATION

F01 — FURNITURE/EQUIPMENT ITEM NO. SEE SCHEDULE FOR MORE INFO

FURNITURE/EQUIPMENT IDENTIFICATION

B222 / 27X24X28 — ELEVATION MARKER, SEE ELEVATIONS ON SHEET A10.01; SIZE (WIDTH x DEPTH x HEIGHT)

CASEWORK IDENTIFICATION

TRUE NORTH / PROJECT NORTH

PROFESSIONAL SEALS:

SOUTH CAROLINA — SSOE, INC No. 746 — CERTIFICATE OF AUTHORIZATION

STATE OF SOUTH CAROLINA — WILLIAM J. FLEMING, Columbia SC, No. 3452 — REGISTERED ARCHITECT — 8-6-2021

SUBMITTAL/REVISION SCHEDULE:

NO.	DATE	DESCRIPTION
	8.06.2021	CONSTRUCTION DOCUMENTS

■ APPROVED FOR CONSTRUCTION
□ NOT APPROVED FOR CONSTRUCTION

CLIENT INFORMATION:

SOUTH CAROLINA EDUCATION LOTTERY

CLIENT PROJECT #:	20048.00
SCEL PROJECT #:	Y20-N001-CB

PROJECT INFORMATION:

4TH FLOOR UPFIT

1333 MAIN STREET, COLUMBIA, SOUTH CAROLINA

SSOE/SW PROJECT #:	021-00531-00
SSOE/SW MANAGER:	BILL FLEMING

SSOE | STEVENS & WILKINSON
1501 Main Street, Suite 730
Columbia, SC 29201
T. (803) 765-0320

THIS DRAWING IS THE PROPERTY OF SSOE | STEVENS & WILKINSON. UNAUTHORIZED USE OF ANY KIND, INCLUDING USE ON OTHER PROJECTS, IS PROHIBITED.
© SSOE, INC. 2021

4TH FLOOR OVERALL PLAN

A1.40

C:\Autodesk\Revit\2004800 - Arch - SC Education Lottery Upfit - Adjusted Scope - V19.2_lbajarias@ssoe.com.rvt :**FILE PATH**
10/20/2021 3:08:29 PM :**PRINT DATE**

1 LEVEL 4 FLOOR PLAN
1/4" = 1'-0"

DRAWING REFERENCE SYMBOLS

DRAWING # ON SHEET
DRAWING TITLE
1 DRAWING NAME
1/8" = 1'-0"
DRAWING SCALE

DRAWING IDENTIFICATION ON SHEET

DRAWING # ON SHEET
SHEET # ON WHICH DRAWING CAN BE FOUND

EXTERIOR ELEVATION REFERENCE

DRAWING # ON SHEET
SHEET # ON WHICH DRAWING CAN BE FOUND

INTERIOR ELEVATION REFERENCE

DRAWING # ON SHEET
SHEET # ON WHICH DRAWING CAN BE FOUND

BUILDING SECTION REFERENCE

DRAWING # ON SHEET
SHEET # ON WHICH DRAWING CAN BE FOUND

WALL SECTION REFERENCE

DRAWING # ON SHEET
SHEET # ON WHICH DRAWING CAN BE FOUND

DETAIL SECTION REFERENCES

AREA DETAILED
DRAWING # ON SHEET
SHEET # ON WHICH DRAWING CAN BE FOUND

REFERENCE CONVENTIONS

LEVEL 1
0'-0"
NAME OF ELEVATION/LEVEL
PROJECT ELEVATION

ELEVATION (FLOOR/LEVEL) REFERENCE

Name
150 SF
101
555
ZONE
NAME (AT OCCUPANT COUNT PLANS AND LIFE SAFETY PLANS, THIS IS THE OCCUPANT LOAD FACTOR TYPE)
SQUARE FOOTAGE
NUMBER (IF USED)
OCCUPANT LOAD COUNT (IF USED)
ZONE (IF USED)

AREA REFERENCE

Room name
101
150 SF
ROOM NAME
ROOM NUMBER
AREA (IF USED)

ROOM REFERENCE

A##
CORE AND FINISH CONFIGURATION
CORE AND FINISH SIZE
SPECIAL CONDITIONS (IF USED)

4W
PARTITION RATING
*NOTED ON LIFE SAFETY PLANS

SEE PARTITION SHEET FOR MORE INFO

PARTITION TYPE IDENTIFICATION

GWB820'-4"
CEILING ELEVATION
CEILING MATERIAL
20'-4 1/2"
CEILING ELEVATION

CEILING TYPE IDENTIFICATION

DOOR # - SEE DOOR SCHEDULE
DOOR & FRAME RATING IN MINUTES

DOOR IDENTIFICATION

F01
FURNITURE/EQUIPMENT ITEM NO. SEE SCHEDULE FOR MORE INFO

FURNITURE/EQUIPMENT IDENTIFICATION

B222
27x24x36
ELEVATION MARKER, SEE ELEVATIONS ON SHEET A10.01
SIZE (WIDTH x DEPTH x HEIGHT)

CASEWORK IDENTIFICATION

GENERAL FLOOR PLAN NOTES

1. ACCESS DOORS SHALL BE INSTALLED IN WALLS AT ALL EQUIPMENT, VALVE OR OTHER LOCATIONS REQUIRING ACCESS FOR MAINTENANCE WHICH ARE LOCATED BEHIND FINISHED SURFACES. SEE SPECIFICATIONS FOR SPECIFIC REQUIREMENTS AND DIRECTIONS.
2. INSTALL GYPSUM WALLBOARD CONTROL JOINTS IN ACCORDANCE WITH ASTM C-840. (WHERE A PARTITION'S LENGTH RUNS IN AN UNINTERRUPTED STRAIGHT PLAN EXCEEDING 30 LINEAR FEET, CONTROL JOINTS SHALL BE INSTALLED 30'-0" ON CENTER MAXIMUM. INSTALL CONTROL JOINTS ALIGNED WITH DOOR JAMBS AND OR EDGE OF SOFFITS WHERE-EVER POSSIBLE. ALL GWB CONTROL JOINT LOCATIONS FOR WALLS AND SOFFITS SHALL MARKED UP ON SHOP DRAWINGS AND SUBMITTED TO THE ARCHITECT FOR APPROVAL PRIOR TO INSTALLATION.
3. WHERE ADJACENT WALLS HAVE DISSIMILAR # OF LAYERS OF GWB, INSTALL FINAL LAYERS OF GWB FLUSH.

GENERAL NOTES - ACCESSIBILITY

1. ALL PLUMBING UNDER LAVATORIES SHALL BE INSULATED SUCH THAT NO HOT, SHARP OR ABRASIVE SURFACES CAN CAUSE INJURY. SEE PLUMBING DWGS FOR MORE INFO.
2. LEVER OR PUSH OPERATED DEVICES ARE REQUIRED ON ALL FAUCETS; SELF CLOSING DEVICES ARE PERMITTED PROVIDED THE FAUCET REMAINS OPERATING FOR AT LEAST TEN (10) SECONDS. SEE PLUMBING DWGS FOR MORE INFO.

DRAWING CONVENTIONS LEGEND

EXISTING CONSTRUCTION
NEW NON RATED METAL STUDS CONSTRUCTION
EXISTING 1 HOUR RATED METAL STUDS CONSTRUCTION
EXISTING 2 HOUR RATED METAL STUDS CONSTRUCTION
CENTERLINE
BUILDING ELEMENTS ABOVE
23.4 EXISTING COLUMN GRID REFERENCE
ALIGN ALIGNMENT REFERENCE

GENERAL NOTES: DIMENSION CRITERIA

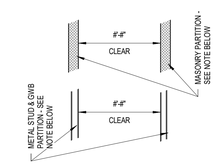

7. CLEAR DIMENSIONS ARE REQUIRED MINIMUM CLEAR WIDTHS BETWEEN FINISH FACES.

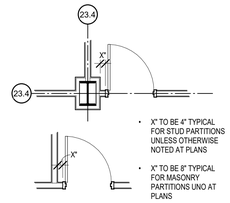

- X" TO BE 4" TYPICAL FOR STUD PARTITIONS UNLESS OTHERWISE NOTED AT PLANS
- X" TO BE 8" TYPICAL FOR MASONRY PARTITIONS UNO AT PLANS

8. FOR OPENINGS IN PARTITIONS OR WALLS:
   A. FOR OPENINGS CENTERED ON A COLUMN CENTERLINE NO DIMENSION WILL BE SHOWN ON THE PLAN, THE WIDTH IS ESTABLISHED BY CRITERIA ABOVE AND BY REQUIRED MINIMUMS FOR ADA CLEARANCE AT STRIKE SIDE OF DOOR.
   B. FOR OPENINGS ADJACENT TO A PARTITION INTERSECTION NO DIMENSION WILL BE SHOWN ON THE PLAN, THE WIDTH IS EASTABLISHED BY CRITERIA ABOVE AND BY REQUIRED MINIMUMS FOR ADA CLEARANCE AT STRIKE SIDE OF DOOR

TRUE NORTH
PROJECT NORTH

C:\Autodesk\Revit\2004800 - Arch - SC Education Lottery Upfit - Adjusted Scope - V19.2_lbajarias@ssoe.com.rvt :FILE PATH
10/20/2021 3:08:31 PM :PRINT DATE

ssoe®
S&W

PROFESSIONAL SEALS:

SOUTH CAROLINA CERTIFICATE OF AUTHORIZATION SSOE, INC No. 746

STATE OF SOUTH CAROLINA WILLIAM J. FLEMING Columbia SC No. 3452 REGISTERED ARCHITECT
8-6-2021

SUBMITTAL/REVISION SCHEDULE:

NO.	DATE	DESCRIPTION
	8.06.2021	CONSTRUCTION DOCUMENTS

■ APPROVED FOR CONSTRUCTION
□ NOT APPROVED FOR CONSTRUCTION

CLIENT INFORMATION:

SOUTH CAROLINA EDUCATION LOTTERY

South Carolina Education Lottery®

CLIENT PROJECT #:	20048.00
SCEL PROJECT #:	Y20-N001-CB

PROJECT INFORMATION:

4TH FLOOR UPFIT

1333 MAIN STREET, COLUMBIA, SOUTH CAROLINA

SSOE/SW PROJECT #:	021-00531-00
SSOE/SW MANAGER:	BILL FLEMING

SSOE | STEVENS & WILKINSON
1501 Main Street, Suite 730
Columbia, SC 29201
T. (803) 765-0320

THIS DRAWING IS THE PROPERTY OF SSOE | STEVENS & WILKINSON. UNAUTHORIZED USE OF ANY KIND, INCLUDING USE ON OTHER PROJECTS, IS PROHIBITED.
© SSOE, INC. 2021

LEVEL 4 FLOOR PLAN

A1.41

MOUNTING HEIGHTS

1. INSTALL ALL ITEMS IN ACCORDANCE WITH THIS DRAWING
2. WHERE DIMENSIONS PROVIDED VARY FROM MANUFACTURER'S RECOMMENDATIONS FOR ADA BARRIER FREE MOUNTING HEIGHTS, THE MANUFACTURER'S RECOMMENDATIONS WILL BE THE STANDARD.
3. DIMENSIONS ARE TO TOP OF FINISH FLOOR
4. MAINTAIN INTEGRITY OF FIRE RATING WHERE ACCESSORIES ARE MOUNTED IN RATED WALLS
5. PROVIDE WOOD BLOCKING FOR ALL ACCESSORIES MOUNTED ON GWB PARTITION.

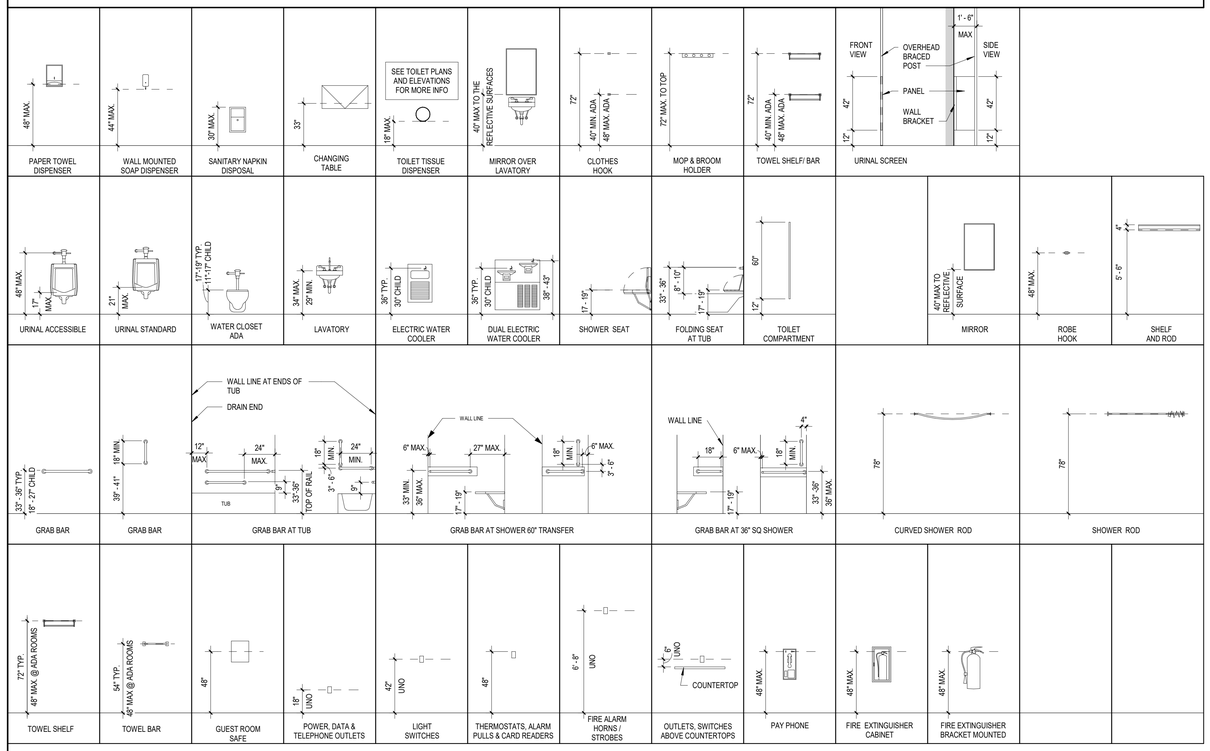

1 TYPICAL MOUNTING HEIGHTS
1/4" = 1'-0"

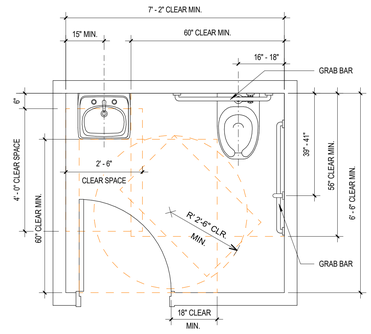

ACCESSIBLE TOILET ROOM

3 MIN. CLEARANCES AT ADA TOILET ROOMS
1/2" = 1'-0"

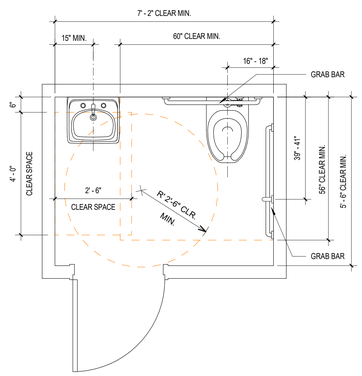

ACCESSIBLE TOILET ROOM

4 MIN. CLEARANCES AT ADA TOILET ROOMS
1/2" = 1'-0"

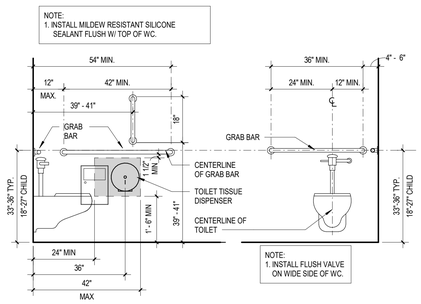

8 ADA TOILET & GRAB BAR ELEVATIONS
1/2" = 1'-0"

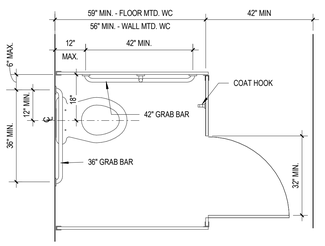

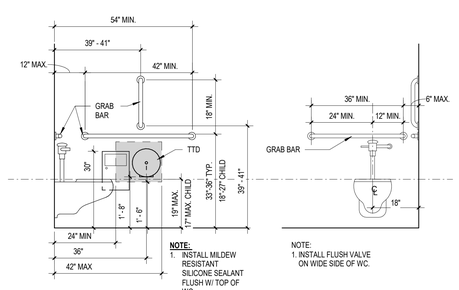

6 ADA TOILET PARTITION PLANS & ELEVATIONS
1/2" = 1'-0"

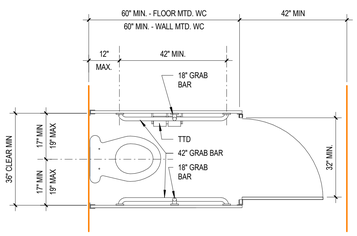

7 ADA AMBULATORY TOILET PARITTION PLANS
1/2" = 1'-0"

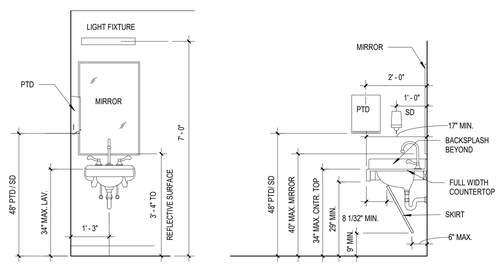

NOTES:
1. 1. INSTALL INSULATED BOOT ON HOT WATER & DRAIN LINES AT ALL WALL MTD. LAVATORIES & COUNTER MOUNTED SINKS.
2. INSTALL MILDEW RESISTANT SILICONE SEALANT FLUSH W/ TOP OF LAVATORY.

9 TYP WALL MOUNTED LAVATORY ELEVATION(S)
1/2" = 1'-0"

SSOE
S&W

PROFESSIONAL SEALS:

SOUTH CAROLINA CERTIFICATE OF AUTHORIZATION SSOE, INC No. 746

STATE OF SOUTH CAROLINA WILLIAM J. FLEMING Columbia SC No. 3452 REGISTERED ARCHITECT
8-6-2021

SUBMITTAL/REVISION SCHEDULE:

NO.	DATE	DESCRIPTION
	8.06.2021	CONSTRUCTION DOCUMENTS

■ APPROVED FOR CONSTRUCTION
□ NOT APPROVED FOR CONSTRUCTION

CLIENT INFORMATION:

SOUTH CAROLINA EDUCATION LOTTERY

South Carolina Education Lottery®

CLIENT PROJECT #:	20048.00
SCEL PROJECT #:	Y20-N001-CB

PROJECT INFORMATION:

4TH FLOOR UPFIT

1333 MAIN STREET, COLUMBIA, SOUTH CAROLINA

SSOE/SW PROJECT #:	021-00531-00
SSOE/SW MANAGER:	BILL FLEMING

SSOE | STEVENS & WILKINSON
1501 Main Street, Suite 730
Columbia, SC 29201
T. (803) 765-0320

THIS DRAWING IS THE PROPERTY OF SSOE | STEVENS & WILKINSON. UNAUTHORIZED USE OF ANY KIND, INCLUDING USE ON OTHER PROJECTS, IS PROHIBITED.
© SSOE, INC. 2021

ANSI ADA ACCESSIBLE DETAILS

A5-00A

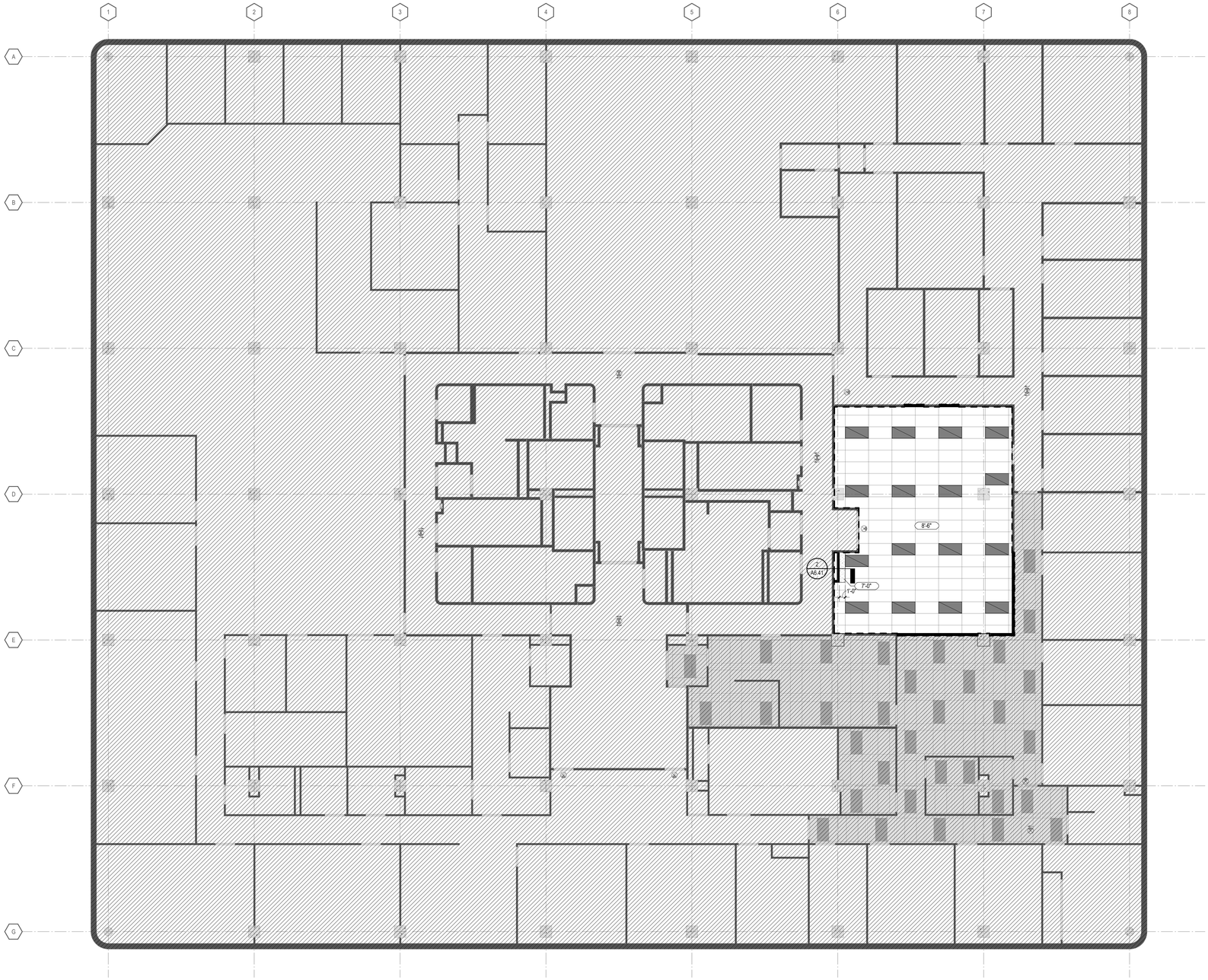

1 LEVEL 4 OVERALL RCP
1/8" = 1'-0"

GENERAL RCP NOTES

1. ALL CEILINGS ARE 8'-6" AFF UNO.
2. LAY CEILING GRIDS AS SHOWN ON REFLECTED CEILING PLANS. EACH ROOM GRID IS PLANNED FOR MAXIMUM TILE SIZE AND OPTIMUM LIGHTING LAYOUT.
3. SEE ELECTRICAL AND MECHANICAL DRAWINGS FOR LIGHTING AND HVAC INFORMATION.
4. NO DEVICES, DAMPERS, VALVES, PUMPS, ETC ARE TO BE LOCATED ABOVE SPACES WITH GWB CEILINGS. WHERE POSSIBLE, ACCESS TO JUNCTION BOXES FOR LIGHTS IS TO BE THROUGH FIXTURES. ALL DEVICES REQUIRING ACCESS ARE TO BE LOCATED IN ADJACENT SPACES WITH ACCESSIBLE CEILING SYSTEMS.
5. REFER TO ELECTRICAL DRAWINGS FOR FULL EXTENT OF EXITING DEVICES, INCLUDING WALL MOUNTED DEVICES.
6. BRACE ALL SUSPENDED CEILINGS FOR SEISMIC RESISTANCE IN ACCORDANCE WITH CODE REQUIREMENTS AND AS DETAILED.
7. ALL CEILING CAVITY AREAS USED AS RETURN AIR PLENUMS SHALL BE CONSTRUCTED WITH FIRE RESISTANT MATERIALS AND SHALL ONLY CONTAIN MATERIALS WHICH HAVE SMOKE DEVELOPED RATINGS NOT GREATER THAN 50 AND FLAME SPREAD RATINGS NOT GREATER THAN 25 AS DETERMINED IN ACCORDANCE WITH ASTM 84.
8. DO NOT USE PVC PIPE IN RETURN AIR PLENUMS.
9. ALL AREAS ABOVE CEILING SHALL BE FREE OF ACCUMULATIONS OF MUD, DUST, DIRT, CONSTRUCTION DEBRIS, ETC. CLEAN TOP SURFACES OF DUCTWORK, LIGHTS, PIPING, CONDUIT, AND OTHER CONSTRUCTION TO PROVIDE CLEAN SURFACE
10. ANY AREA ABOVE CEILING EXPOSED TO VIEW FROM BELOW SHALL BE NO LESS THAN PRIME PAINTED.
11. REPLACE DAMAGED EXISTING CEILING TILES WITHIN INDICATED WORK AREA AS NEEDED.

RCP LEGEND

2' x 4' ACOUSTICAL CEILING PANEL.
SEE CEILING TAG FOR TYPE

2'X5 EXISTING CEILING TO REMAIN

GYPSUM WALLBOARD CEILING

EXIT LIGHT FIXTURE - NEW
SEE ELECTRICAL DWGS.

EXIT LIGHT FIXTURE - EXISTING TO REMAIN
SEE ELECTRICAL DWGS.

NEW 2X4 TROFFER
SEE ELECTRICAL DWGS.

EXISTING 2X4 TROFFER TO REMAIN
SEE ELECTRICAL DWGS.

PROFESSIONAL SEALS:

SOUTH CAROLINA
SSOE, INC
No. 746
CERTIFICATE OF AUTHORIZATION

STATE OF SOUTH CAROLINA
WILLIAM J. FLEMING
Columbia, SC
No. 3452
REGISTERED ARCHITECT

8-6-2021

SUBMITTAL/REVISION SCHEDULE:

NO.	DATE	DESCRIPTION
	8.06.2021	CONSTRUCTION DOCUMENTS

■ APPROVED FOR CONSTRUCTION
□ NOT APPROVED FOR CONSTRUCTION

CLIENT INFORMATION:

SOUTH CAROLINA EDUCATION LOTTERY

CLIENT PROJECT #:	20048.00
SCEL PROJECT #:	Y20-N001-CB

PROJECT INFORMATION:

4TH FLOOR UPFIT

1333 MAIN STREET, COLUMBIA, SOUTH CAROLINA

SSOE/SW PROJECT #:	021-00531-00
SSOE/SW MANAGER:	BILL FLEMING

SSOE | STEVENS & WILKINSON
1501 Main Street, Suite 730
Columbia, SC 29201
T. (803) 765-0320

THIS DRAWING IS THE PROPERTY OF SSOE | STEVENS & WILKINSON. UNAUTHORIZED USE OF ANY KIND, INCLUDING USE ON OTHER PROJECTS, IS PROHIBITED.
© SSOE, INC. 2021

LEVEL 4 OVERALL REFLECTED CEILING PLAN

A6.40

C:\Autodesk\Revit\2004800 - Arch - SC Education Lottery Upfit - Adjusted Scope - V19.2_lbajarias@ssoe.com.rvt :**FILE PATH**
10/20/2021 3:08:34 PM :**PRINT DATE**

1 Level 4 - RCP
1/4" = 1'-0"

GENERAL RCP NOTES

1. ALL CEILINGS ARE 8'-6" AFF UNO.
2. LAY CEILING GRIDS AS SHOWN ON REFLECTED CEILING PLANS. EACH ROOM GRID IS PLANNED FOR MAXIMUM TILE SIZE AND OPTIMUM LIGHTING LAYOUT.
3. SEE ELECTRICAL AND MECHANICAL DRAWINGS FOR LIGHTING AND HVAC INFORMATION.
4. NO DEVICES, DAMPERS, VALVES, PUMPS, ETC ARE TO BE LOCATED ABOVE SPACES WITH GWB CEILINGS. WHERE POSSIBLE, ACCESS TO JUNCTION BOXES FOR LIGHTS IS TO BE THROUGH FIXTURES. ALL DEVICES REQUIRING ACCESS ARE TO BE LOCATED IN ADJACENT SPACES WITH ACCESSIBLE CEILING SYSTEMS.
5. REFER TO ELECTRICAL DRAWINGS FOR FULL EXTENT OF EXITING DEVICES, INCLUDING WALL MOUNTED DEVICES.
6. BRACE ALL SUSPENDED CEILINGS FOR SEISMIC RESISTANCE IN ACCORDANCE WITH CODE REQUIREMENTS AND AS DETAILED.
7. ALL CEILING CAVITY AREAS USED AS RETURN AIR PLENUMS SHALL BE CONSTRUCTED WITH FIRE RESISTANT MATERIALS AND SHALL ONLY CONTAIN MATERIALS WHICH HAVE SMOKE DEVELOPED RATINGS NOT GREATER THAN 50 AND FLAME SPREAD RATINGS NOT GREATER THAN 25 AS DETERMINED IN ACCORDANCE WITH ASTM 84.
8. DO NOT USE PVC PIPE IN RETURN AIR PLENUMS.
9. ALL AREAS ABOVE CEILING SHALL BE FREE OF ACCUMULATIONS OF MUD, DUST, DIRT, CONSTRUCTION DEBRIS, ETC. CLEAN TOP SURFACES OF DUCTWORK, LIGHTS, PIPING, CONDUIT, AND OTHER CONSTRUCTION TO PROVIDE CLEAN SURFACE
10. ANY AREA ABOVE CEILING EXPOSED TO VIEW FROM BELOW SHALL BE NO LESS THAN PRIME PAINTED.
11. REPLACE DAMAGED EXISTING CEILING TILES WITHIN INDICATED WORK AREA AS NEEDED.

RCP LEGEND

2' x 4' ACOUSTICAL CEILING PANEL. SEE CEILING TAG FOR TYPE

2'X5 EXISTING CEILING TO REMAIN

GYPSUM WALLBOARD CEILING

EXIT LIGHT FIXTURE - NEW SEE ELECTRICAL DWGS.

EXIT LIGHT FIXTURE - EXISTING TO REMAIN SEE ELECTRICAL DWGS.

NEW 2X4 TROFFER SEE ELECTRICAL DWGS.

EXISTING 2X4 TROFFER TO REMAIN SEE ELECTRICAL DWGS.

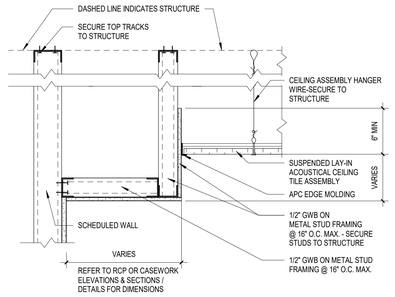

2 GWB SOFFIT DETAIL - APC CLNG
1 1/2" = 1'-0"

ssoe®

S&W

PROFESSIONAL SEALS:

SOUTH CAROLINA CERTIFICATE OF AUTHORIZATION SSOE, INC No. 746

STATE OF SOUTH CAROLINA WILLIAM J. FLEMING Columbia SC No. 3652 REGISTERED ARCHITECT

8-6-2021

SUBMITTAL/REVISION SCHEDULE:

NO.	DATE	DESCRIPTION
	8.06.2021	CONSTRUCTION DOCUMENTS

■ APPROVED FOR CONSTRUCTION
□ NOT APPROVED FOR CONSTRUCTION

CLIENT INFORMATION:

SOUTH CAROLINA EDUCATION LOTTERY

South Carolina Education Lottery®

CLIENT PROJECT #:	20048.00
SCEL PROJECT #:	Y20-N001-CB

PROJECT INFORMATION:

4TH FLOOR UPFIT

1333 MAIN STREET, COLUMBIA, SOUTH CAROLINA

SSOE/SW PROJECT #:	021-00531-00
SSOE/SW MANAGER:	BILL FLEMING

SSOE | STEVENS & WILKINSON
1501 Main Street, Suite 730
Columbia, SC 29201
T. (803) 765-0320

THIS DRAWING IS THE PROPERTY OF SSOE | STEVENS & WILKINSON. UNAUTHORIZED USE OF ANY KIND, INCLUDING USE ON OTHER PROJECTS, IS PROHIBITED.
© SSOE, INC. 2021

LEVEL 4 REFLECTED CEILING PLAN

A6.41

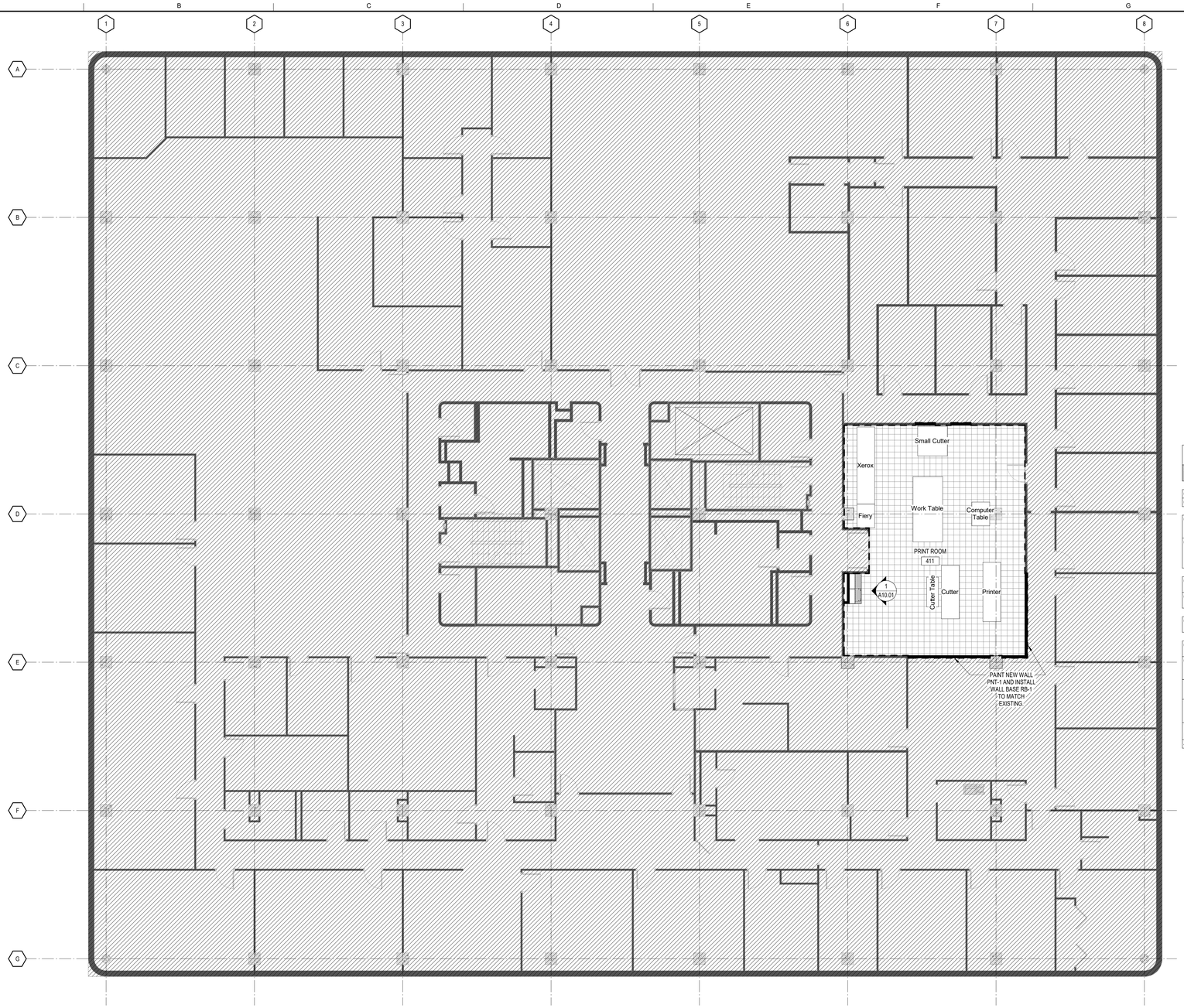

1 4TH FLOOR OVERALL PLAN
1/8" = 1'-0"

GENERAL FINISH NOTES

1. PAINT ALL FERROUS METAL EXPOSED TO MOISTURE, EXCEPT PREFINISHED METAL.
2. PAINT ALL STEEL STAIR SURFACES EXPOSED TO VIEW OR MOISTURE.
3. PAINT ALL NEW EXTERIOR HOLLOW METAL FRAMES AND DOORS IN ACCORDANCE WITH THE PAINTING SPECIFICATIONS AND IN COLOR INDICATED.
4. AT ALL TRANSITIONS BETWEEN DIFFERENT FLOOR FINISH MATERIALS, INSTALL SILLS OR THRESHOLDS AND/OR TERMINATE MATERIALS AS INDICATED ON THE TYPICAL TERMINATIONS DETAIL LEGEND. SEE SHEET **A10.01**.
5. AT ALL MILLWORK BASE CABINETS, PROVIDE BASE AS SCHEDULE FOR ADJACENT WALLS UNO.
6. REMOVE CURING COMPOUNDS FROM ALL CONCRETE SLABS IN ACCORDANCE WITH MANUFACTURER RECOMMENDATIONS PRIOR TO THE INSTALLATION OF ANY FLOOR FINISH MATERIALS.
7. MOISTURE TEST ALL NEW AND EXISTING CONCRETE SLABS ON GRADE PRIOR TO INSTALLATION OF ANY FLOOR FINISH MATERIALS. DO NOT INSTALL FINISHES UNLESS THE MOISTURE EMISSION RATE IS ACCEPTABLE TO THE FINISH MANUFACTURER AND MAINTAINS ALL WARRANTIES. PERFORM TESTS AS SPECIFIED. SCHEDULE SLAB POURS AND TESTS TO ALLOW PROPER CURING AND TESTING TIMES WITHOUT DELAYS TO THE OVERALL SCHEDULE.

FINISH LEGEND

- VCT-1 — 12X12 VINYL COMPOSITION TILE
- CPT-1 — BROADLOOM CARPET
- EXISTING CARPET TO REMAIN — BROADLOOM CARPET
- AREA NOT IN CONTRACT

FINISH LEGEND

SPECIFICATION SECTION	CODE	MANUFACTURER	PATTERN	COLOR	NOTES
064116	PLAM-1	WILSONART	1500-60	GREY	MILLWORK - VERTICAL
064116	PLAM-2	WILSONART	4845-60	TWILIGHT ZEPHER	MILLWORK - HORIZONTAL
095113	ACT-1	ARMSTRONG	MATCH EXISTING	WHITE	2X5 SQUARE LAY-IN ACOUSTICAL TILE .70 NRC OR GREATER
095113	ACT-1 GRID	ARMSTRONG	MATCH EXISTING	WHITE	ALTERNATE SEISMIC C OR D INSTALLATION WITH 7/8" WALL MOLDING AND CLIPS - SEE SITE SEISMIC CATAGORY
096513	RB-1	ROPPE	700 SERIES	177 STEEL BLUE	EXISTING OPEN OFFICE - 4" COVED WALL BASE
096513	RB-2	ROPPE	700 SERIES	640 CREEKBED	PRINT ROOM - 4" COVED WALL BASE
096519	VCT-1	ARMSTRONG	STANDARD EXCELON IMPERIAL TEXTURE	51911 CLASSIC WHITE	12X12 TILES
099123	PNT-1	SHERWIN WILLIAMS	SW7036	ACCESSIBLE BEIGE	EXISTING OPEN OFFICE PAINT - EGG SHELL
099123	PNT-1A	SHERWIN WILLAIMS	SW7036	ACCESSIBLE BEIGE	LIGHT INDUSTRIAL COATING - SW PRO INDUSTRIAL OR EQUAL - MP#151

ROOM FINISH SCHEDULE

ROOM NO.	ROOM NAME	FINISHES				COMMENTS	REV.
		WALLS	CEILINGS	FLOORS	WALL BASE		
LEVEL 4							
411	PRINT ROOM	PNT-1A	ACT-1	VCT-1	RB-2		

ssoe®

S&W

PROFESSIONAL SEALS:

SOUTH CAROLINA — SSOE, INC No. 746 — CERTIFICATE OF AUTHORIZATION

STATE OF SOUTH CAROLINA — WILLIAM J. FLEMING — Columbia SC — No. 3452 — REGISTERED ARCHITECT — 8-6-2021

SUBMITTAL/REVISION SCHEDULE:

NO.	DATE	DESCRIPTION
	8.06.2021	CONSTRUCTION DOCUMENTS

■ APPROVED FOR CONSTRUCTION
□ NOT APPROVED FOR CONSTRUCTION

CLIENT INFORMATION:

SOUTH CAROLINA EDUCATION LOTTERY

South Carolina Education Lottery®

CLIENT PROJECT #:	20048.00
SCEL PROJECT #:	Y20-N001-CB

PROJECT INFORMATION:

4TH FLOOR UPFIT

1333 MAIN STREET, COLUMBIA, SOUTH CAROLINA

SSOE/SW PROJECT #:	021-00531-00
SSOE/SW MANAGER:	BILL FLEMING

SSOE | STEVENS & WILKINSON
1501 Main Street, Suite 730
Columbia, SC 29201
T. (803) 765-0320

THIS DRAWING IS THE PROPERTY OF SSOE | STEVENS & WILKINSON. UNAUTHORIZED USE OF ANY KIND, INCLUDING USE ON OTHER PROJECTS, IS PROHIBITED.

© SSOE, INC. 2021

LEVEL 4 FINISH FLOOR OVERALL PLAN

A9.40

C:\Autodesk\Revit\2004800 - Arch - SC Education Lottery Upfit - Adjusted Scope - V19.2_lbajarias@ssoe.com.rvt :**FILE PATH**
10/20/2021 3:08:37 PM :**PRINT DATE**

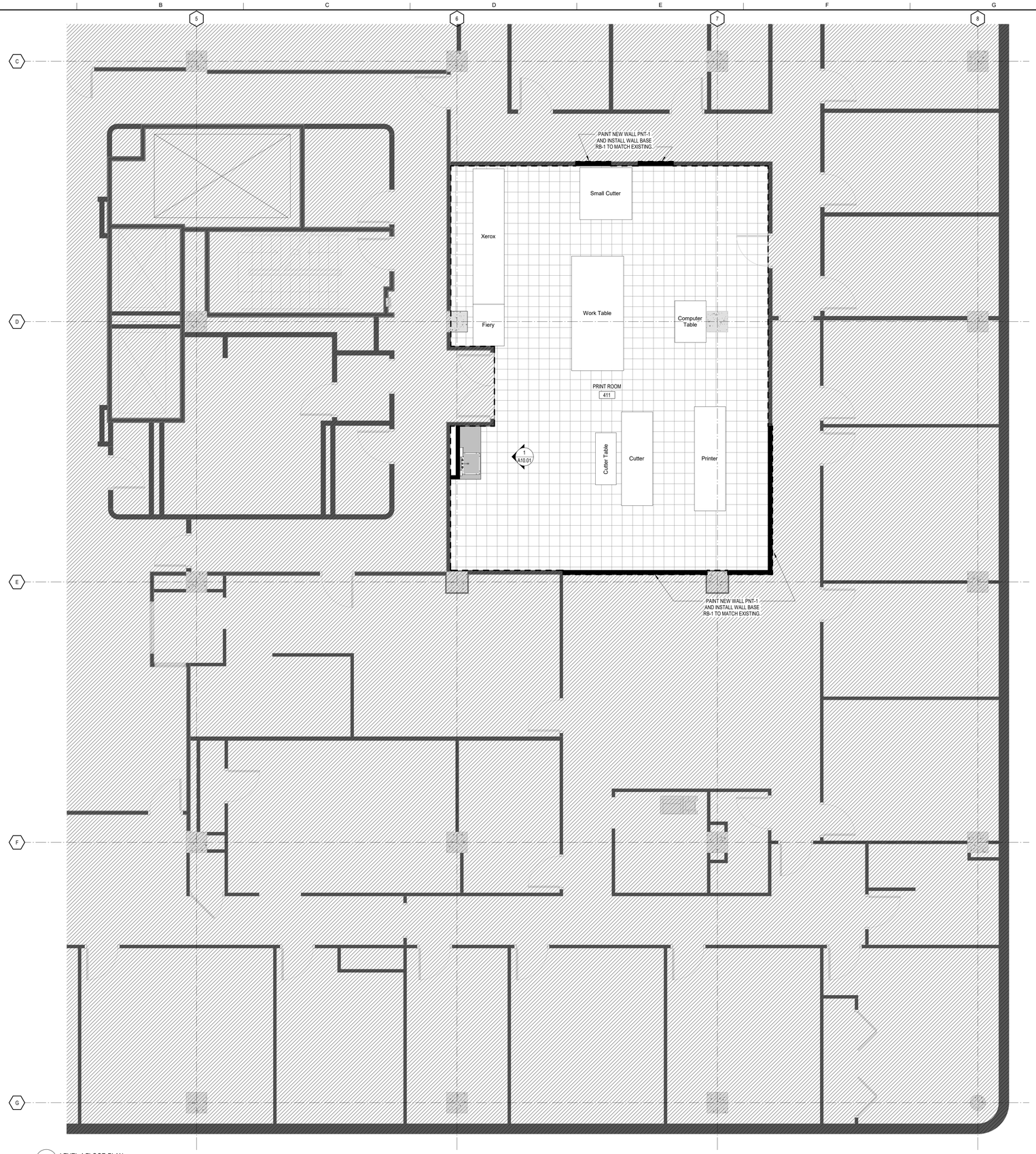

1 LEVEL 4 FLOOR PLAN
1/4" = 1'-0"

GENERAL FINISH NOTES

1. PAINT ALL FERROUS METAL EXPOSED TO MOISTURE, EXCEPT PREFINISHED METAL.
2. PAINT ALL STEEL STAIR SURFACES EXPOSED TO VIEW OR MOISTURE.
3. PAINT ALL NEW EXTERIOR HOLLOW METAL FRAMES AND DOORS IN ACCORDANCE WITH THE PAINTING SPECIFICATIONS AND IN COLOR INDICATED.
4. AT ALL TRANSITIONS BETWEEN DIFFERENT FLOOR FINISH MATERIALS, INSTALL SILLS OR THRESHOLDS AND/OR TERMINATE MATERIALS AS INDICATED ON THE TYPICAL TERMINATIONS DETAIL LEGEND. SEE SHEET **A10.01**.
5. AT ALL MILLWORK BASE CABINETS, PROVIDE BASE AS SCHEDULE FOR ADJACENT WALLS UNO.
6. REMOVE CURING COMPOUNDS FROM ALL CONCRETE SLABS IN ACCORDANCE WITH MANUFACTURER RECOMMENDATIONS PRIOR TO THE INSTALLATION OF ANY FLOOR FINISH MATERIALS.
7. MOISTURE TEST ALL NEW AND EXISTING CONCRETE SLABS ON GRADE PRIOR TO INSTALLATION OF ANY FLOOR FINISH MATERIALS. DO NOT INSTALL FINISHES UNLESS THE MOISTURE EMISSION RATE IS ACCEPTABLE TO THE FINISH MANUFACTURER AND MAINTAINS ALL WARRANTIES. PERFORM TESTS AS SPECIFIED. SCHEDULE SLAB POURS AND TESTS TO ALLOW PROPER CURING AND TESTING TIMES WITHOUT DELAYS TO THE OVERALL SCHEDULE.

FINISH LEGEND

VCT-1
12X12 VINYL COMPOSITION TILE

CPT-1
BROADLOOM CARPET

EXISTING CARPET TO REMAIN
BROADLOOM CARPET

AREA NOT IN CONTRACT

FINISH LEGEND

SPECIFICATION SECTION	CODE	MANUFACTURER	PATTERN	COLOR	NOTES
064116	PLAM-1	WILSONART	1500-60	GREY	MILLWORK - VERTICAL
064116	PLAM-2	WILSONART	4845-60	TWILIGHT ZEPHER	MILLWORK - HORIZONTAL
095113	ACT-1	ARMSTRONG	MATCH EXISTING	WHITE	2X5 SQUARE LAY-IN ACOUSTICAL TILE .70 NRC OR GREATER
095113	ACT-1 GRID	ARMSTRONG	MATCH EXISTING	WHITE	ALTERNATE SEISMIC C OR D INSTALLATION WITH 7/8" WALL MOLDING AND CLIPS - SEE SITE SEISMIC CATAGORY
096513	RB-1	ROPPE	700 SERIES	177 STEEL BLUE	EXISTING OPEN OFFICE - 4" COVED WALL BASE
096513	RB-2	ROPPE	700 SERIES	640 CREEKBED	PRINT ROOM - 4" COVED WALL BASE
096519	VCT-1	ARMSTRONG	STANDARD EXCELON IMPERIAL TEXTURE	51911 CLASSIC WHITE	12X12 TILES
099123	PNT-1	SHERWIN WILLIAMS	SW7036	ACCESSIBLE BEIGE	EXISTING OPEN OFFICE PAINT - EGG SHELL
099123	PNT-1A	SHERWIN WILLAIMS	SW7036	ACCESSIBLE BEIGE	LIGHT INDUSTRIAL COATING - SW PRO INDUSTRIAL OR EQUAL - MP#151

ROOM FINISH SCHEDULE

ROOM NO.	ROOM NAME	FINISHES				COMMENTS	REV.
		WALLS	CEILINGS	FLOORS	WALL BASE		
LEVEL 4							
411	PRINT ROOM	PNT-1A	ACT-1	VCT-1	RB-2		

ssoe®

S&W

PROFESSIONAL SEALS:

SOUTH CAROLINA SSOE, INC No. 746 CERTIFICATE OF AUTHORIZATION

STATE OF SOUTH CAROLINA WILLIAM J. FLEMING Columbia SC No. 3452 REGISTERED ARCHITECT

8-6-2021

SUBMITTAL/REVISION SCHEDULE:

NO.	DATE	DESCRIPTION
	8.06.2021	CONSTRUCTION DOCUMENTS

■ APPROVED FOR CONSTRUCTION
□ NOT APPROVED FOR CONSTRUCTION

CLIENT INFORMATION:

SOUTH CAROLINA EDUCATION LOTTERY

South Carolina Education Lottery®

CLIENT PROJECT #:	20048.00
SCEL PROJECT #:	Y20-N001-CB

PROJECT INFORMATION:

4TH FLOOR UPFIT

1333 MAIN STREET, COLUMBIA, SOUTH CAROLINA

SSOE/SW PROJECT #:	021-00531-00
SSOE/SW MANAGER:	BILL FLEMING

SSOE® | STEVENS & WILKINSON
1501 Main Street, Suite 730
Columbia, SC 29201
T. (803) 765-0320

THIS DRAWING IS THE PROPERTY OF SSOE | STEVENS & WILKINSON. UNAUTHORIZED USE OF ANY KIND, INCLUDING USE ON OTHER PROJECTS, IS PROHIBITED.

© SSOE, INC. 2021

LEVEL 4 FINISH FLOOR PLAN

A9.41

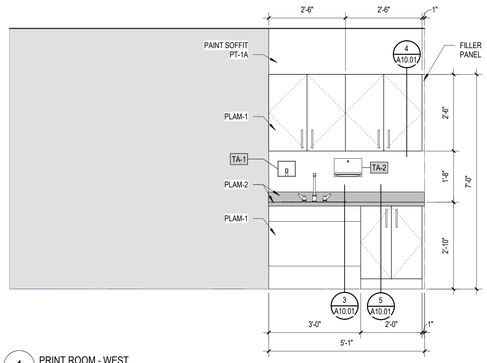

1 PRINT ROOM - WEST
1/2" = 1'-0"

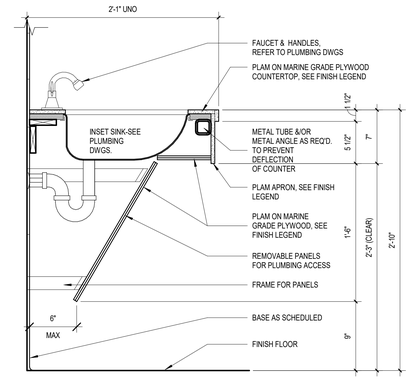

3 BASE SINK CABINET DETAIL
1 1/2" = 1'-0"

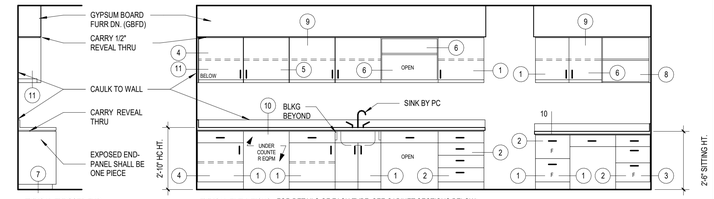

TYPICAL EXPOSED END

TYPICAL ELEVATIONS FOR DETAILS OF EACH TYPE, SEE CABINET SECTIONS BELOW; WHERE COUNTER TOP ABUTS WALL, PROVIDE END SPLASH

TOILET ACCESSORIES SCHEDULE - ALTERNATE #1

ITEM #	DESCRIPTION	MFR.	MODEL #	PROVIDED BY
TA-1	CONTURA SERIES SURFACE MOUNTED SOAP DISPENSER	BOBRICK	B-4112	CFCI
TA-2	SURFACE MOUNTED PAPER TOWEL DISPENSER - 10.75" W X 7.125" H X 4" DEEP	BOBRICK	B-2621	CFCI

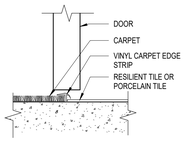

2 CPT TO VCT
3" = 1'-0"

FLOORING TRANSITION DETAIL LEGEND

	CARPET	PORCELAIN TILE	RESILIENT TILE (RTF)	QUARRY TILE	CERAMIC TILE	CONCRETE	TERRAZZO	ATHLETIC FLOOR	RESINOUS	EXTERIOR
CARPET	--		T1	--	--	--	--	--	--	--
PORCELAIN TILE	--	--		--	--	--	--	--	--	--
RESILIENT TILE	--	--	--	--	--	--	--	--	--	--
QUARRY TILE	--	--	--	--	--	--	--	--	--	--
CERAMIC TILE	--	--	--	--	--	--	--	--	--	--
CONCRETE	--	--	--	--	--	--	--	--	--	--
TERRAZZO	--	--	--	--	--	--	--	--	--	--
ATHLETIC FLOOR	--	--	--	--	--	--	--	--	--	--
RESINOUS	--	--	--	--	--	--	--	--	--	--
EXTERIOR	--	--	--	--	--	--	--	--	--	--

NOTE:
AT ALL TRANSITIONS BETWEEN FLOOR MATERIALS, INSTALL SILLS OR THRESHOLDS, AND OR TERMINATION MATERIALS AS INDICATED ON THESE DRAWINGS OR AS OTHERWISE RECOMMENDED BY MANUFACTURER'S WRITTEN INSTRUCTIONS.

NOTE:
ALL INTERIOR SURFACES TO BE FINISHED WITH WHITE CABINET LINER UNO

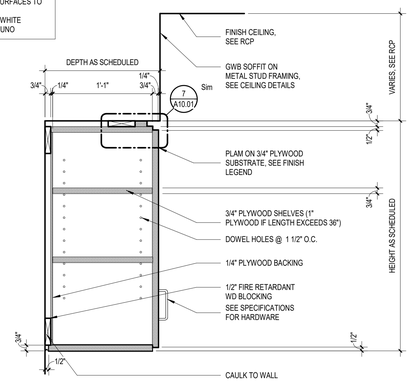

4 UPPER CABINET CLOSED SHELVING
1 1/2" = 1'-0"

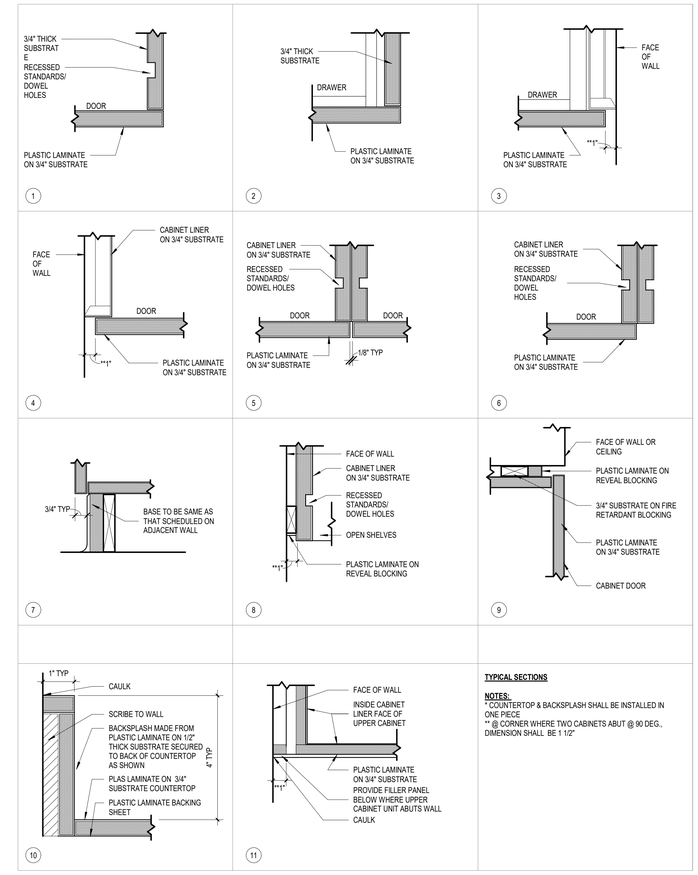

TYPICAL SECTIONS

NOTES:
* COUNTERTOP & BACKSPLASH SHALL BE INSTALLED IN ONE PIECE
** @ CORNER WHERE TWO CABINETS ABUT @ 90 DEG., DIMENSION SHALL BE 1 1/2"

6 MIL-TYPICAL MILLWORK OVERLAY ELEVATIONS & SECTIONS
1 1/2" = 1'-0"

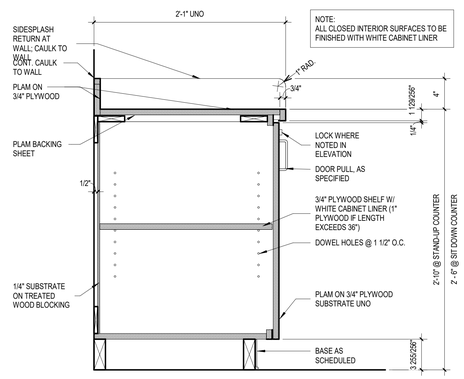

5 BASE CABINET DETAIL - DOORS
1 1/2" = 1'-0"

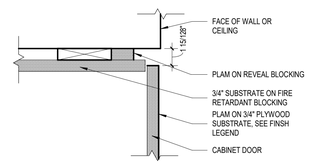

7 CABINET @ SOFFIT DETAIL
3" = 1'-0"

SSOE®
S&W

PROFESSIONAL SEALS:

SOUTH CAROLINA CERTIFICATE OF AUTHORIZATION SSOE, INC No. 746

STATE OF SOUTH CAROLINA WILLIAM J. FLEMING Columbia, SC No. 3452 REGISTERED ARCHITECT
8-6-2021

SUBMITTAL/REVISION SCHEDULE:

NO.	DATE	DESCRIPTION
	8.06.2021	CONSTRUCTION DOCUMENTS

■ APPROVED FOR CONSTRUCTION
□ NOT APPROVED FOR CONSTRUCTION

CLIENT INFORMATION:

SOUTH CAROLINA EDUCATION LOTTERY

South Carolina Education Lottery®

CLIENT PROJECT #:	20048.00
SCEL PROJECT #:	Y20-N001-CB

PROJECT INFORMATION:

4TH FLOOR UPFIT

1333 MAIN STREET, COLUMBIA, SOUTH CAROLINA

SSOE/SW PROJECT #:	021-00531-00
SSOE/SW MANAGER:	BILL FLEMING

SSOE® | STEVENS & WILKINSON
1501 Main Street, Suite 730
Columbia, SC 29201
T. (803) 765-0320

THIS DRAWING IS THE PROPERTY OF SSOE | STEVENS & WILKINSON. UNAUTHORIZED USE OF ANY KIND, INCLUDING USE ON OTHER PROJECTS, IS PROHIBITED.
© SSOE, INC. 2021

MILLWORK SECTIONS & DETAILS

A10.01

A | B | C | D | E | F | G | H | J

PARTITION TYPE IDENTIFICATION LEGEND & NOTES

PARTITION TAG LEGEND

"CORE CONFIGURATION" NOTED BY LETTER
"FINISH CONFIGURATION" NOTED BY #
"CORE MEMBER SIZE(S)" # FOR NOMINAL SIZE OF STUD, CMU,. ETC AND LETTER FOR FURRING SIZES - SEE CHART BELOW FOR MORE INFO
A# #A ##AA
SPECIAL CONDITION IF DIFFERENT FROM TYPICAL WALL.
- ## FOR ATYPICAL HEAD OF WALL FOR DETAIL # ON SHEET **A0.XX**
- LETTER FOR ALL OTHER ATYPICAL CONDITIONS AS LISTED BELOW

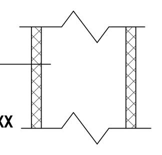

"CORE CONFIGURATION"

F FC
G MS (FINISH ONE SIDE)
M MS (FINISH TWO SIDES)
MX MS (FINISH TWO SIDES) - EXISTING

"FINISH CONFIGURATION"

1	I I + GWB (1)	or	GWB (1) + I I + GWB (1)
2	I I + GWB (2)	or	GWB (2) + I I + GWB (2)
3	I I + GWB (3)	or	GWB (3) + I I + GWB (3)
4	GWB (1) + I I + GWB (2)		
5	GWB (1) + I I + GWB (3)		
6	GWB (2) + I I + GWB (3)		
7	GWB (2) + I I + GWB (1)		
8	GWB (3) + I I + GWB (1)		
9	GWB (3) + I I + GWB (2)		

ABBREVIATIONS

I I	=	"CORE"
(#)	=	NUMBER OF LAYERS OF GWB
CIP	=	CAST-IN-PLACE CONCRETE
CMU	=	CONCRETE MASONRY UNIT
FC	=	STUD FURRING (TYPE AS SCHEDULED)
GSL	=	GYPSUM SHAFT LINER
GWB	=	GYPSUM WALLBOARD, TYPE AS SCHEDULED
HF	=	HAT-SHAPED METAL FURRING
MS	=	METAL STUD FRAMING
MF	=	METAL STUD FURRING
MSS	=	METAL SHAFTWALL STUD FRAMING
RC	=	RESILIENT CHANNEL
WS	=	WOOD STUD FRAMING
WF	=	WOOD FURRING
ZF	=	METAL Z-FURRING

PARTITION - "CORE MEMBER SIZE"

METAL STUDS	
NOMINAL	ACTUAL
1	1 5/8"
2	2 1/2"
3	3 5/8"
4	4"
6	6"
8	8"

METAL STUD FURRING (MSF)		
CALLOUT	TYPE	SIZE (DEPTH ONLY)
A	HF	7/8"
B	HF	1 1/2"
C	RC	1/2"
D	ZF	1"
E	ZF	1 1/2"
F	ZF	2"
G	ZF	2 1/2"
H	MSF	3/4"
J	MSF	1"
K	MSF	1 1/2"
L	MSF	2"

1. CAST-IN-PLACE CONCRETE "STRUCTURAL MEMBER SIZE IS DIMENSIONED AT PLANS, SEE STRUCTURAL DWGS FOR MORE INFORMATION.
2. RESILIENT CHANNEL IS 1/2" DEEP, SEE SPECIFICATIONS FOR LENGTH AND TYPE
3. FOR ALL METAL STUD FURRING, ONLY DEPTH IS NOTED. SEE SPECIFICATION FOR ALL OTHER SIZE AND GAUGE REQUIREMENTS. FURRING LEGS SHALL BE OF DIMENSION ADEQUATE TO MEET PERFORMANCE AND FASTENING REQUIREMENTS.

PARTITION - "RATING" - CALLED OUT ON LIFE SAFETY PLANS

SP	SMOKE PARTITION
SB	SMOKE BARRIER
5P	30 MINUTE FIRE PARTITION
1B	1 HOUR FIRE BARRIER
1P	1 HOUR FIRE PARTITION
1W	1 HOUR FIRE WALL
2B	2 HOUR FIRE BARRIER
2P	2 HOUR FIRE PARTITION
2W	2 HOUR FIRE WALL
3B	3 HOUR FIRE BARRIER
3P	3 HOUR FIRE PARTITION
3W	3 HOUR FIRE WALL

PARTITION - "HEAD CONDITION"

1. ALL RATED WALLS ARE TO UNDERSIDE OF DECK.
2. ALL ACOUSTICAL WALLS ARE TO UNDERSIDE OF DECK.
3. SEE PARTITION TYPE DETAILS FOR TYPICAL HEAD OF WALL CONDITION. IF HEAD OF WALL CONDITION IS ATYPICAL, NUMBER NOTED IN PARTITION TYPE TAG IN SPECIAL CONDITIONS AREA OF TAG CORRESPONDS TO DETAIL # ON HEAD OF WALL CONDITION DETAILS ON SHEET **A0.50**

PARTITION - "SPECIAL CONDITION"

FOR ALL OTHER ATYPICAL CONDITIONS, LETTER CORRESPONDS TO LIST BELOW:

A. NOT USED
B. NOT USED
C. STUD AND GWB TO 6" ABOVE HIGHEST ADJACENT CEILING.
D. NOT USED
E. EXTEND EXISTING WALL STUD & BOTH SIDES OF GWB TO UNDERSIDE OF DECK. SEAL ALONG BOTH SIDES OF TOP OF GWB TO PREVENT FUMES AND ODORS IN THE PRINT ROOM FROM INFILTRATING ADJACENT ROOMS AND CORRIDORS. SEE WALL PARTITION ON 5/A0.50 FOR DETAILS.
F. STUD AND GWB TO EXTEND TO UNDERSIDE OF CEILING. TOP OF WALL TO BE CAPPED WITH GWB. SEE HEAD DETAIL #4 ON A0.50. LIGHT GAUGE MFR.'S ENGINEER OF RECORD TO DESIGN WALL TO MEET PERFORMANCE CRITERIA AS DETAILED AT GENERAL NOTES ON A0.10. IF REQUIRED, PROVIDE STRUCTURAL STEEL TUBE POST TO PROVIDE ADDITIONAL SUPPORT FOR WALL.
G. STUD AND GWB TO EXTEND TO UNDERSIDE OF DECK. SEE HEAD DETAIL #5 ON A0.50.

GENERAL NOTES: STUD CONSTRUCTION

1. BASIS OF DESIGN: ***STEEL FRAMED PARTITIONS***
DESIGN IS BASED ON GUIDELINES INCLUDED IN PRODUCT TECHNICAL INFORMATION OF THE STEEL MANUFACTURE'S ASSOCIATION LATEST EDITION OF THE SSMA PUBLICATION AND THE FOLLOWING PERFORMANCE CRITERIA:

A. LIMITING HEIGHT CRITERIA:
DEFLECTION OF **L/240** AT **5 LBS. PER SQ. FT.** CONSTANT AIR-PRESSURE LOADS

B. THICKNESS-STEEL COMPONENTS:

GAUGE	DESIGN THICKNESS
22	0.0283
20	0.0346
18	0.0451

2. MINIMUM GAUGE:
IF LIMITING HEIGHT AS SCHEDULED IN PARTITION DETAILS EXCEEDS PROJECT CONDITIONS OR IF THE SELECTED STEEL STUD MANUFACTURE'S THICKNESS OF STEEL COMPONENTS VARIES FROM THE BASIS OF DESIGN AS SET FORTH ABOVE, PROVIDE MANUFACTURE'S STANDARD THICKNESS (GAUGE) THAT MEETS OR EXCEEDS LIMITING HEIGHT PERFORMANCE CRITERIA FOR STUD DEPTH AND SPACING INDICATED.

3. DOOR JAMBS
PROVIDE DOUBLE 20 GA. STUDS AT ALL DOOR OPENINGS, EXTEND FROM FLOOR TO STRUCTURE ABOVE. TYPICAL FOR ALL DOORS IN METAL STUD WALLS.

GENERAL NOTES: FIRE RATED ASSEMBLIES

1. ALL FIRE-RATED ASSEMBLIES TO EXTEND FROM TOP OF SLAB TO UNDERSIDE OF STRUCTURE. SEAL TOP OF ASSEMBLY TO THE UNDERSIDE OF METAL DECK OR STEEL BEAM AS REQUIRED TO ACHIEVE FIRE PROTECTION RATING.
2. AT GWB/STUD FIRE RATED ASSEMBLIES, INSTALL FRAMING AND GYPSUM WALL BOARD TO OFFSET AROUND STRUCTURAL MEMBERS OR OTHER OBSTRUCTIONS TO MAINTAIN ACOUSTICAL OR FIRE RATINGS (IF ACOUSTICAL PARTITION IS ALSO FIRE-RATED). SEE DETAILS AT SHEET **A0.50**.
3. SEAL BOTTOM OF WALL TO CONCRETE SLAB TO ACHIEVE FIRE PROTECTION RATING. SEE DETAILS AT SHEET **A0.50**.
4. REFER TO SPECIFICATIONS FOR FIRE-RATED JOINT SYSTEMS FOR FIRE-RATED SEALANTS AND FIRESTOP CAULKING.
5. INSTALL FRAMING AND GWB TO OFFSET AROUND STRUCTURAL MEMBERS OR OTHER PENETRATIONS OF FIRE-RATED ASSEMBLIES TO MAINTAIN FIRE RESISTIVE RATINGS PER UL APPROVED DETAIL.

ASSEMBLY PRIORITY LEGEND

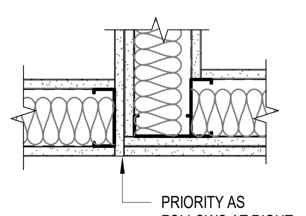

PROVIDE RATED ASSEMBLIES IN ACCORDANCE WITH UL LISTING, MFR. INSTRUCTIONS & APPROVED DETAILS INDICATING HOURS OF FIRE RESISTANCE. REFER TO LIFE SAFETY PLANS, PLANS & ENLARGED PLANS FOR PARTITION TYPES, LOCATIONS & EXTENT OF RATED WALLS.

PRIORITY OF RATED ASSEMBLIES:

• TWO HOUR FIRE & SMOKE WALL	PRIORITY 1 - HIGHEST
• TWO HOUR FIRE WALL	PRIORITY 2
• TWO HOUR SHAFT WALL	PRIORITY 3
• ONE HOUR FIRE & SMOKE WALL	PRIORITY 4
• ONE HOUR FIRE WALL	PRIORITY 5
• ONE HOUR SHAFT WALL	PRIORITY 6
• NON-RATED	PRIORITY 7 - LOWEST

GENERAL NOTES - FIRE RATED STENCIL

1. APPLY PARTITION LABELS ABOVE THE CEILING ON ALL RATED AND SMOKE TIGHT ASSEMBLIES. LABEL AS PER ASSEMBLY RATING.
2. COLOR TO BE BRIGHT RED. MINIMUM TEXT SIZE AS REQUIRED BY LOCAL AUTHORITIES HAVING JURISDICTION.
3. APPLY LABEL AT BEGINNING AND END OF EACH LENGTH OF ASSEMBLY AND APPLY LABEL INTERMITTENTLY BETWEEN END/BEGINNING AT MINIMUM SPACING OF 12'-0" O.C.
4. ARROWS TO BE CONTINUOUS AROUND ASSEMBLY.
5. FIRE/SMOKE DAMPER ACCESS AND OTHER MECHANICAL ELEMENTS SHALL BE IDENTIFIED AS PER ***IBC 2018 SECTION 717.4***. ALL OTHER IDENTIFIERS SHALL BE IN COMPLIANCE WITH THE IBC AND ALL OTHER APPLICABLE CODES AND MUNICIPALITY REQUIREMENTS.
6. REPAIR/PATCH EXISTING FIRE RATED PARTITION LABELS AS NECESSARY
7. PAINT OVER EXISTING FIRE RATED PARTITION LABELS AND ARROWS SO AS TO COMPLETELY COVER ALL INDICATION OF A FIRE RATING FOR ASSEMBLIES THAT WILL NOT RETAIN A FIRE RATING IN THE PROPOSED NEW DESIGN.

FIRE RATED STENCIL DETAIL

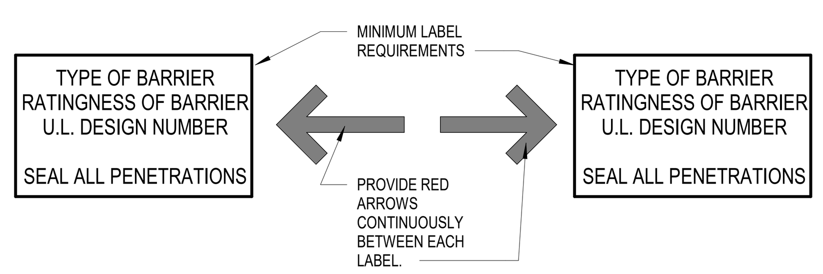

GENERAL NOTES: GYPSUM WALLBOARD

1. DO NOT INSTALL GYPSUM WALLBOARD IN DIRECT CONTACT WITH THE FLOOR. ALL GWB SHALL BE SHIMMED 1/2" ABOVE FLOOR SLAB WITH NON-POROUS SHIM. PLASTIC NON-POROUS HORSESHOE SHIMS ARE RECOMMENDED; GYPSUM WALLBOARD SHIMS ARE NOT ACCEPTABLE. PROVIDE BACKER ROD & CONTINUOUS ACOUSTICAL OR FIRE RATED SEALANT TOOLED FOR HOURGLASS SHAPE PER MFR'S RECOMMENDATIONS.
2. WHERE GYPSUM WALL BOARD EXTENDS TO THE UNDERSIDE OF STRUCTURE, STOP GYPSUM WALL BOARD 1/2" BELOW LINE OF STRUCTURE AND SEAL AS REQUIRED.
3. TYPICAL AT ALL INTERIOR PARTITIONS, GYPSUM WALLBOARD TO BE 5/8" TYPE "X" UNLESS NOTED OTHERWISE AT PARTITION TYPE MODIFIER OR AS SCHEDULED IN SPECIFICATION.
4. TYPICAL AT ALL EXTERIOR PERIMETER WALLS, INSTALL 5/8" TYPE "X" MOLD AND MOISTURE RESISTANT GYPSUM WALLBOARD.
5. STAGGER JOINTS AT INSTALLATIONS OF MULTIPLE LAYERS OF GYPSUM WALLBOARD.

GENERAL NOTES: GYPSUM WALLBOARD REVEALS

1. STANDARD, WHERE INDICATED IN THESE DOCUMENTS, PROVIDE REVEALS OF TYPE AND SIZE INDICATED AS SPECIFIED.
2. ELEVATIONS MAY NOT SHOW ALL FACES OF COLUMNS OR FACES OF EVERY WALL - G.C. SHALL ASSUME THAT ALL REVEALS WILL RETURN TO INSIDE CORNER UNLESS OTHERWISE NOTED.
3. AT ALL INTERSECTIONS OF VERTICAL AND HORIZONTAL REVEALS, PROVIDE FACTORY FABRICATED INTERSECTIONS AND CORNERS.

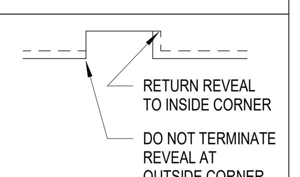

GENERAL NOTES: NON-RATED & ACOUSTICAL PARTITIONS/ASSEMBLIES

1. ALL INTERIOR PARTITIONS TO EXTEND 6" ABOVE CEILING HEIGHT UNLESS NOTED OTHERWISE BY PARTITION TYPE HEAD CONDITION SCHEDULE. SEE PLAN FOR PARTITION IDENTIFICATION.
2. ALL ACOUSTIC PARTITIONS TO EXTEND FROM TOP OF SLAB TO UNDERSIDE OF STRUCTURE. SEAL TOP AND BOTTOM TYPICAL TO THE UNDERSIDE OF METAL DECK OR STEEL BEAM AS REQUIRED TO ACHIEVE ACOUSTIC OR FIRE PROTECTION RATING. SEE DETAILS AT SHEET **A0.50**. INSTALL FRAMING AND GYPSUM WALL BOARD TO OFFSET AROUND STRUCTURAL MEMBERS OR OTHER OBSTRUCTIONS TO MAINTAIN ACOUSTICAL OR FIRE RATINGS (IF ACOUSTICAL PARTITION IS ALSO FIRE-RATED).
3. ALL INTERIOR METAL STUD PARTITIONS TO HAVE SOUND BATTS INSULATION UNLESS NOTED OTHERWISE BY PARTITION MODIFIER. AT 3 5/8" STUD CAVITIES, PROVIDE 3 1/2" SOUND BATTS. AT 6" OR 8" STUD CAVITIES PROVIDE 5 1/2" SOUND BATTS.
4. ALL PARTITIONS CONTAINING PLUMBING PIPING SHALL BE THERMALLY INSULATED WITH MINERAL WOOL.
5. THE FOLLOWING LIST OF ROOMS (IF USED) SHALL HAVE THEIR PERIMETER PARTITIONS INSULATED USING MINERAL WOOL: ELECTRICAL ROOMS, MECHANICAL ROOMS, AV EQUIPMENT ROOMS, DATA OR TELECOM ROOMS, SPRINKLER RISER ROOMS AND FIRE PUMP ROOMS.
6. WHERE NOTED, PROVIDE RESILIENT CHANNELS AT CORRIDOR SIDE OF WALL. SEE PARTITION TYPE DETAILS AND SPECIFICATIONS FOR INSTALLATION GUIDELINES.

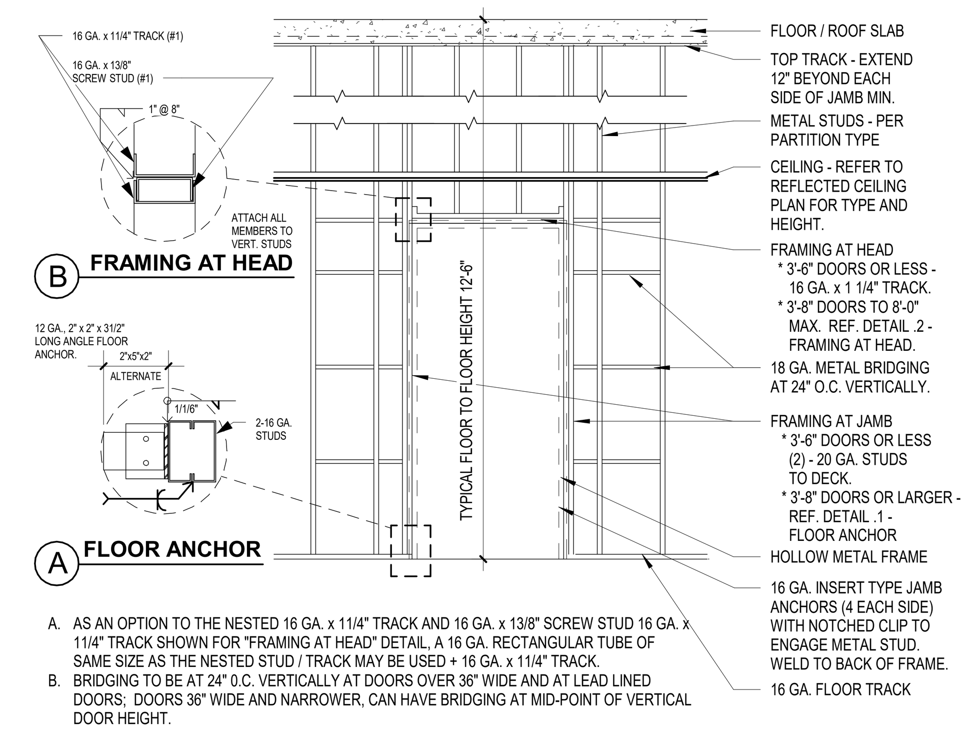

A. AS AN OPTION TO THE NESTED 16 GA. x 11/4" TRACK AND 16 GA. x 13/8" SCREW STUD 16 GA. x 11/4" TRACK SHOWN FOR "FRAMING AT HEAD" DETAIL, A 16 GA. RECTANGULAR TUBE OF SAME SIZE AS THE NESTED STUD / TRACK MAY BE USED + 16 GA. x 11/4" TRACK.
B. BRIDGING TO BE AT 24" 0.C. VERTICALLY AT DOORS OVER 36" WIDE AND AT LEAD LINED DOORS; DOORS 36" WIDE AND NARROWER, CAN HAVE BRIDGING AT MID-POINT OF VERTICAL DOOR HEIGHT.

3 GENERAL - DOOR FRAMING REINFORCING
1" = 1'-0"

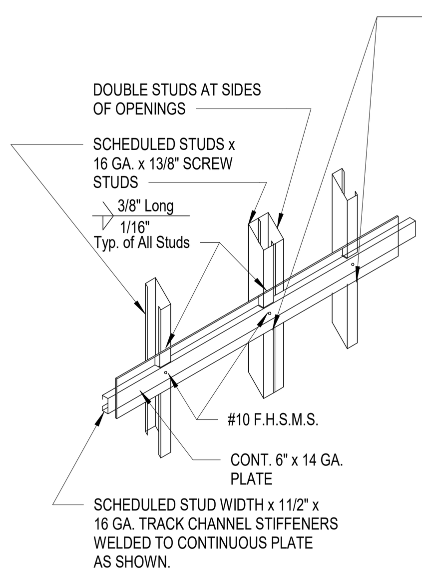

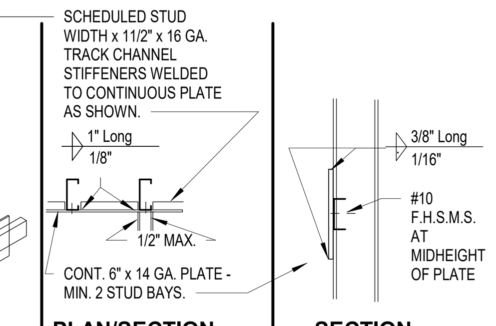

PLAN/SECTION | **SECTION**

NOTES:
1. TYPE "C" BACKING PLATE FOR ALL UPPER WALL HUNG CABINETS (OVER 2 SHELVES), WALL MOUNTED EQUIPMENT UPTO 200 POUNDS PER FOOT INCLUDING SHOWER SEAT AND GRAB BARS.
2. USE #12 SELF-TAPPING SHEET METAL SCREWS WHEN ATTACHING ITEMS TO BACKING PLATE.
3. WALL STUD FLANGES ARE CONTINUOUS.

CONNECTION DETAIL | **TYPE "C" BACKING PLATE**

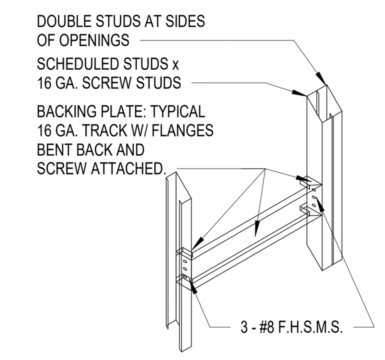

NOTES:
1. TYPE "B" BACKING PLATE FOR UPPER WALL HUNG CABINETS (UP TO 2 SHELVES), BASE CABINETS, FULL HEIGHT CABINETS, FILM VIEWING COUNTERS, WALL HUNG BENCHES, HANDRAILS, GUARDRAILS, AND WALL HUNG EQUIPMENT - MAXIMUM WEIGHT 100 POUNDS
2. VERIFY LENGTH, HEIGHT, LOCATION OF BACKING PLATE AND NUMBER REQUIRED WITH MANUFACTURER OF ITEMS IN NOTE 1.
3. USE #12 SELF-TAPPING SHEET METAL SCREWS WHEN ATTACHING ITEMS TO BACKING PLATE.
4. WALL STUD FLANGES ARE CONTINUOUS.

CONNECTION DETAIL | **TYPE "B" BACKING PLATE**

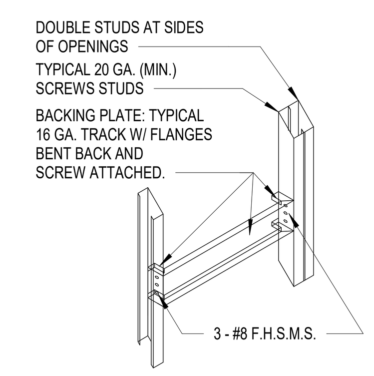

NOTES:
1. TYPE "A" BACKING PLATE FOR MISC. ITEMS; I.E. SURFACE MOUNTED MIRRORS, WASTE RECEPTACLES, TOWEL DISPENSERS, CHAIR RAILS, ETC. MAXIMUM WEIGHT 50 POUNDS
2. VERIFY LENGTH, HEIGHT, LOCATION OF BACKING PLATE AND NUMBER REQUIRED WITH ACCESSORY MANUFACTURER.
3. USE #12 SELF-TAPPING SHEET METAL SCREWS WHEN ATTACHING ITEMS TO BACKING PLATE.
4. WALL STUD FLANGES ARE CONTINUOUS.

CONNECTION DETAIL | **TYPE "A" BACKING PLATE**

6 BACKING PLATE AND CONNECTION DETAILS
1" = 1'-0"

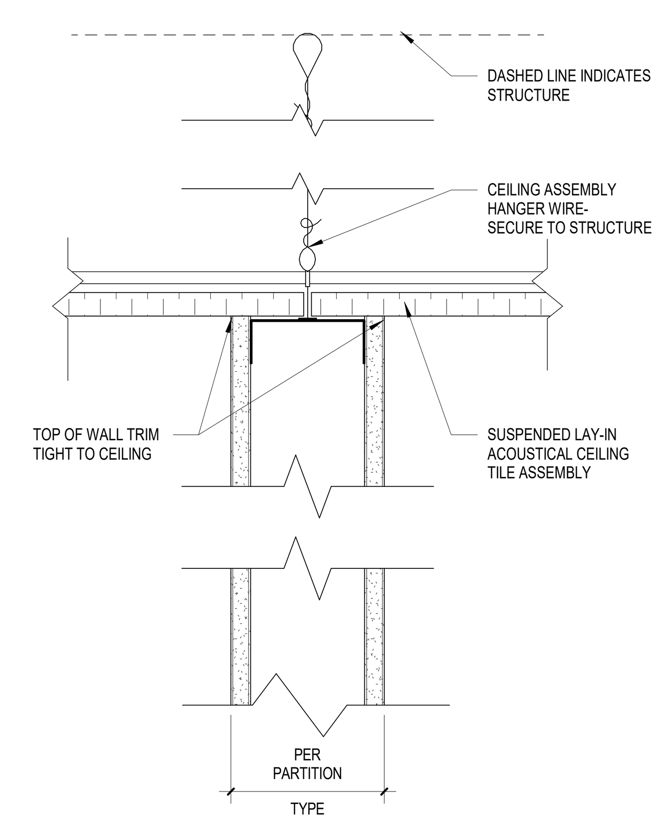

4 PARTIAL HEIGHT WALL
3" = 1'-0"

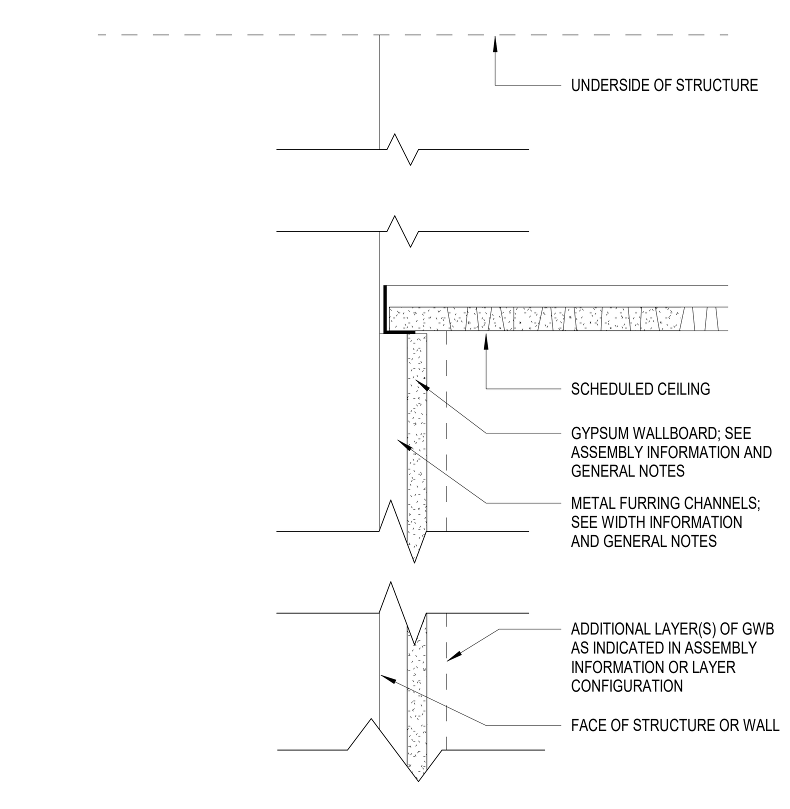

1 PARTIAL HEAD DTL - F - TO UNDERSIDE OF CEILING
3" = 1'-0"

M1

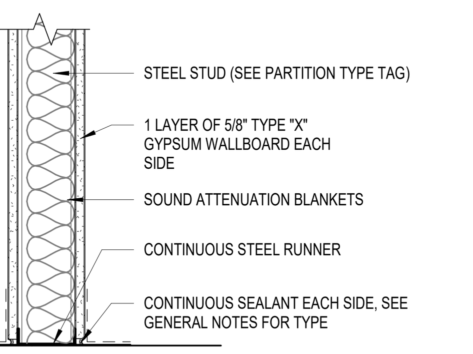

SECTION AT BASE

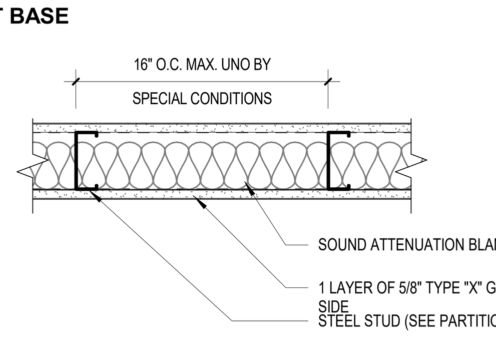

PLAN DETAIL

G1

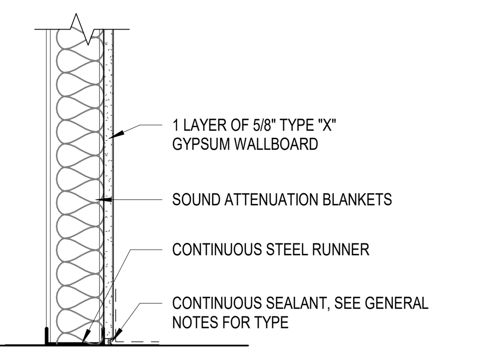

SECTION AT BASE

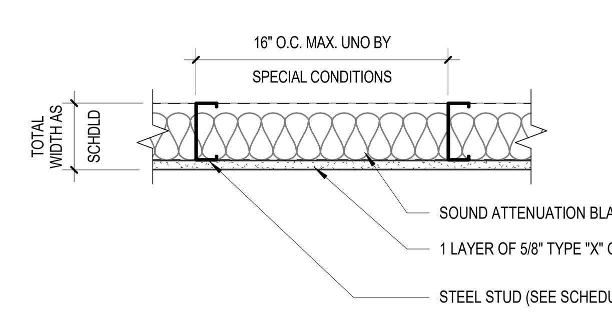

PLAN DETAIL

F1

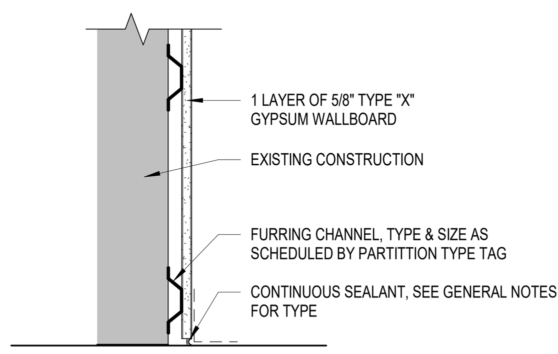

SECTION AT BASE

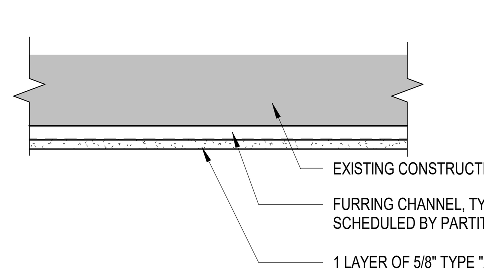

PLAN DETAIL

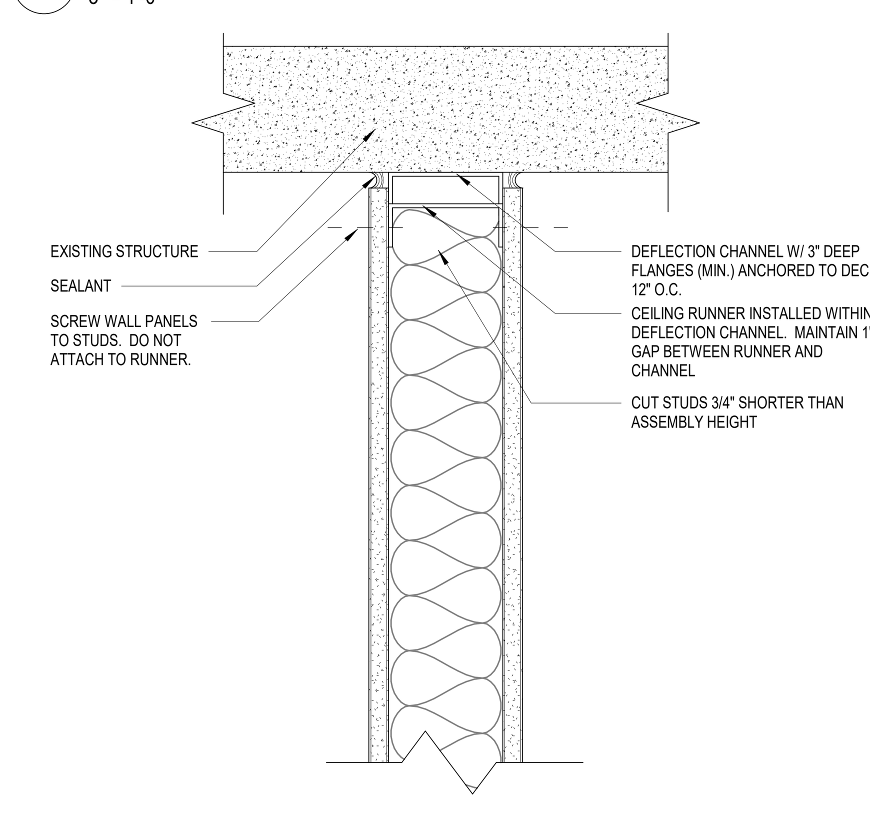

5 TOP OF WALL TO UNDERSIDE OF DECK
3" = 1'-0"

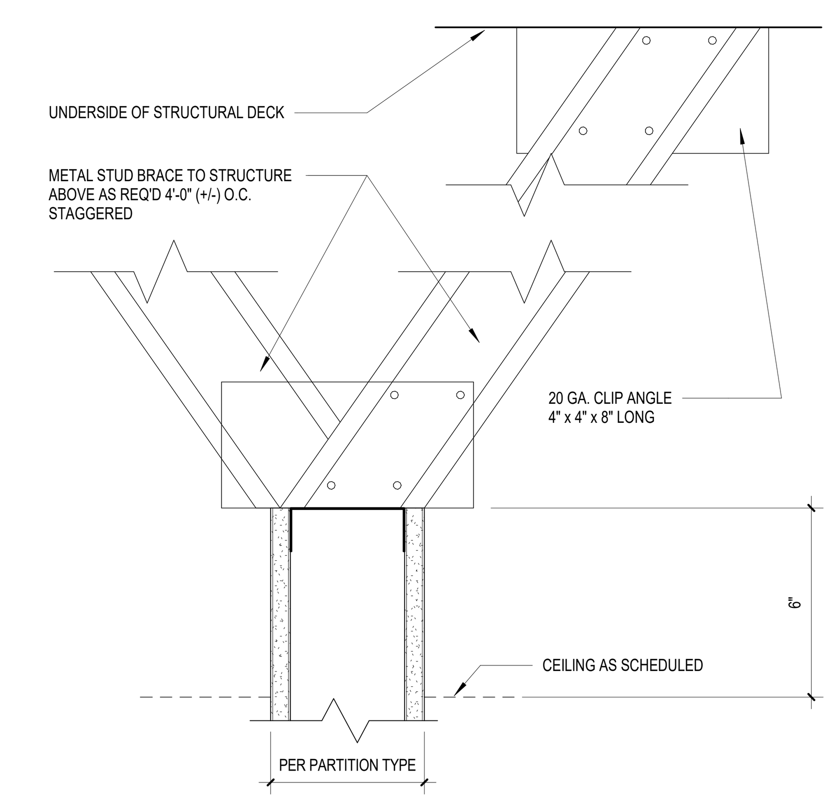

2 PARTIAL HEAD DTL - M1 - STUD/GWB TO 6" ABOVE CEILING
3" = 1'-0"

1 | 2 | 3 | 4 | 5 | 6 | 7

SSOE
S&W

PROFESSIONAL SEALS:

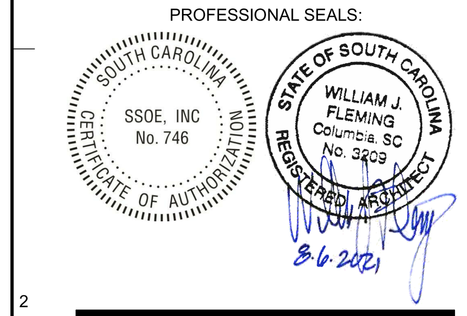

SUBMITTAL/REVISION SCHEDULE:

NO.	DATE	DESCRIPTION
	8.06.2021	CONSTRUCTION DOCUMENTS

■ APPROVED FOR CONSTRUCTION
□ NOT APPROVED FOR CONSTRUCTION

CLIENT INFORMATION:

SOUTH CAROLINA EDUCATION LOTTERY

South Carolina Education Lottery ®

CLIENT PROJECT #:	20048.00
SCEL PROJECT #:	Y20-N001-CB

PROJECT INFORMATION:

4TH FLOOR UPFIT

1333 MAIN STREET, COLUMBIA, SOUTH CAROLINA

SSOE/SW PROJECT #:	021-00531-00
SSOE/SW MANAGER:	BILL FLEMING

SSOE | STEVENS & WILKINSON
1501 Main Street, Suite 730
Columbia, SC 29201
T. (803) 765-0320

THIS DRAWING IS THE PROPERTY OF SSOE | STEVENS & WILKINSON. UNAUTHORIZED USE OF ANY KIND, INCLUDING USE ON OTHER PROJECTS, IS PROHIBITED.
© SSOE, INC. 2021

PARTITION TYPES & DETAILS

A0.50

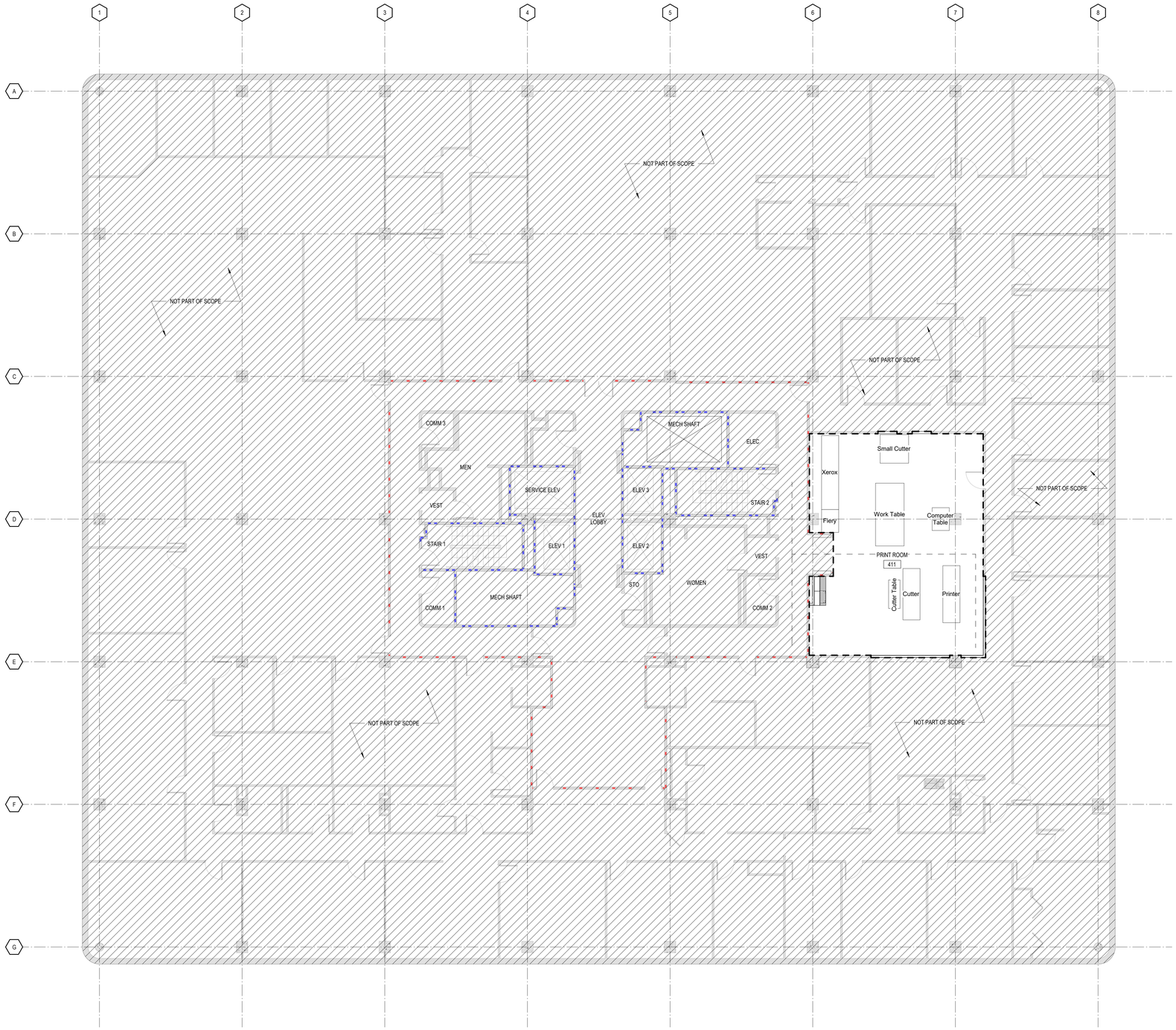

1 4TH FLOOR OVERALL PLAN
1/8" = 1'-0"

GENERAL FLOOR PLAN NOTES

1. ACCESS DOORS SHALL BE INSTALLED IN WALLS AT ALL EQUIPMENT, VALVE OR OTHER LOCATIONS REQUIRING ACCESS FOR MAINTENANCE WHICH ARE LOCATED BEHIND FINISHED SURFACES. SEE SPECIFICATIONS FOR SPECIFIC REQUIREMENTS AND DIRECTIONS.
2. INSTALL GYPSUM WALLBOARD CONTROL JOINTS IN ACCORDANCE WITH ASTM C-840. (WHERE A PARTITION'S LENGTH RUNS IN AN UNINTERRUPTED STRAIGHT PLAN EXCEEDING 30 LINEAR FEET, CONTROL JOINTS SHALL BE INSTALLED 30'-0" ON CENTER MAXIMUM. INSTALL CONTROL JOINTS ALIGNED WITH DOOR JAMBS AND OR EDGE OF SOFFITS WHERE-EVER POSSIBLE. ALL GWB CONTROL JOINT LOCATIONS FOR WALLS AND SOFFITS SHALL MARKED UP ON SHOP DRAWINGS AND SUBMITTED TO THE ARCHITECT FOR APPROVAL PRIOR TO INSTALLATION.
3. WHERE ADJACENT WALLS HAVE DISSIMILAR # OF LAYERS OF GWB, INSTALL FINAL LAYERS OF GWB FLUSH.

DRAWING CONVENTIONS LEGEND

- EXISTING CONSTRUCTION
- NEW NON RATED METAL STUDS CONSTRUCTION
- EXISTING 1 HOUR RATED METAL STUDS CONSTRUCTION
- EXISTING 2 HOUR RATED METAL STUDS CONSTRUCTION
- CENTERLINE
- BUILDING ELEMENTS ABOVE
- 23.4 — EXISTING COLUMN GRID REFERENCE
- ALIGN — ALIGNMENT REFERENCE

REFERENCE CONVENTIONS

LEVEL 1 / 0'-0" — NAME OF ELEVATION/LEVEL; PROJECT ELEVATION

ELEVATION (FLOOR/LEVEL) REFERENCE

Name / 150 SF / 101 / 500 / ZONE — NAME (AT OCCUPANT COUNT PLANS AND LIFE SAFETY PLANS, THIS IS THE OCCUPANT LOAD FACTOR TYPE); SQUARE FOOTAGE; NUMBER (IF USED); OCCUPANT LOAD COUNT (IF USED); ZONE (IF USED)

AREA REFERENCE

Room name / 101 / 150 SF — ROOM NAME; ROOM NUMBER; AREA (IF USED)

ROOM REFERENCE

A## — CORE AND FINISH CONFIGURATION; CORE AND FINISH SIZE; SPECIAL CONDITIONS (IF USED)

4W — PARTITION RATING *NOTED ON LIFE SAFETY PLANS

*SEE PARTITION SHEET FOR MORE INFO

PARTITION TYPE IDENTIFICATION

GWB@20'-4" — CEILING ELEVATION; CEILING MATERIAL

20'-4 1/2" — CEILING ELEVATION

CEILING TYPE IDENTIFICATION

DOOR # - SEE DOOR SCHEDULE

60 — DOOR & FRAME RATING IN MINUTES

DOOR IDENTIFICATION

F01 — FURNITURE/EQUIPMENT ITEM NO. SEE SCHEDULE FOR MORE INFO

FURNITURE/EQUIPMENT IDENTIFICATION

B222 / 27X24X28 — ELEVATION MARKER, SEE ELEVATIONS ON SHEET A10.01; SIZE (WIDTH x DEPTH x HEIGHT)

CASEWORK IDENTIFICATION

TRUE NORTH / PROJECT NORTH

PROFESSIONAL SEALS:

SOUTH CAROLINA — SSOE, INC No. 746 — CERTIFICATE OF AUTHORIZATION

STATE OF SOUTH CAROLINA — WILLIAM J. FLEMING, Columbia SC, No. 3452 — REGISTERED ARCHITECT — 8-6-2021

SUBMITTAL/REVISION SCHEDULE:

NO.	DATE	DESCRIPTION
	8.06.2021	CONSTRUCTION DOCUMENTS

■ APPROVED FOR CONSTRUCTION
□ NOT APPROVED FOR CONSTRUCTION

CLIENT INFORMATION:

SOUTH CAROLINA EDUCATION LOTTERY

CLIENT PROJECT #:	20048.00
SCEL PROJECT #:	Y20-N001-CB

PROJECT INFORMATION:

4TH FLOOR UPFIT

1333 MAIN STREET, COLUMBIA, SOUTH CAROLINA

SSOE/SW PROJECT #:	021-00531-00
SSOE/SW MANAGER:	BILL FLEMING

SSOE | STEVENS & WILKINSON
1501 Main Street, Suite 730
Columbia, SC 29201
T. (803) 765-0320

THIS DRAWING IS THE PROPERTY OF SSOE | STEVENS & WILKINSON. UNAUTHORIZED USE OF ANY KIND, INCLUDING USE ON OTHER PROJECTS, IS PROHIBITED.
© SSOE, INC. 2021

4TH FLOOR OVERALL PLAN

A1.40

C:\Autodesk\Revit\2004800 - Arch - SC Education Lottery Upfit - Adjusted Scope - V19.2_lbajarias@ssoe.com.rvt :**FILE PATH**
10/20/2021 3:08:29 PM :**PRINT DATE**

1 LEVEL 4 FLOOR PLAN
1/4" = 1'-0"

DRAWING REFERENCE SYMBOLS

DRAWING # ON SHEET
DRAWING TITLE
1 DRAWING NAME
1/8" = 1'-0"
DRAWING SCALE

DRAWING IDENTIFICATION ON SHEET

DRAWING # ON SHEET
SHEET # ON WHICH DRAWING CAN BE FOUND

EXTERIOR ELEVATION REFERENCE

DRAWING # ON SHEET
SHEET # ON WHICH DRAWING CAN BE FOUND

INTERIOR ELEVATION REFERENCE

DRAWING # ON SHEET
SHEET # ON WHICH DRAWING CAN BE FOUND

BUILDING SECTION REFERENCE

DRAWING # ON SHEET
SHEET # ON WHICH DRAWING CAN BE FOUND

WALL SECTION REFERENCE

DRAWING # ON SHEET
SHEET # ON WHICH DRAWING CAN BE FOUND

DETAIL SECTION REFERENCES

AREA DETAILED
DRAWING # ON SHEET
SHEET # ON WHICH DRAWING CAN BE FOUND

REFERENCE CONVENTIONS

LEVEL 1
0'-0"
NAME OF ELEVATION/LEVEL
PROJECT ELEVATION

ELEVATION (FLOOR/LEVEL) REFERENCE

Name
150 SF
101
555
ZONE
NAME (AT OCCUPANT COUNT PLANS AND LIFE SAFETY PLANS, THIS IS THE OCCUPANT LOAD FACTOR TYPE)
SQUARE FOOTAGE
NUMBER (IF USED)
OCCUPANT LOAD COUNT (IF USED)
ZONE (IF USED)

AREA REFERENCE

Room name
101
150 SF
ROOM NAME
ROOM NUMBER
AREA (IF USED)

ROOM REFERENCE

A##
CORE AND FINISH CONFIGURATION
CORE AND FINISH SIZE
SPECIAL CONDITIONS (IF USED)

4W
PARTITION RATING
*NOTED ON LIFE SAFETY PLANS

SEE PARTITION SHEET FOR MORE INFO

PARTITION TYPE IDENTIFICATION

GWB820'-4"
CEILING ELEVATION
CEILING MATERIAL
20'-4 1/2"
CEILING ELEVATION

CEILING TYPE IDENTIFICATION

DOOR # - SEE DOOR SCHEDULE
DOOR & FRAME RATING IN MINUTES

DOOR IDENTIFICATION

F01
FURNITURE/EQUIPMENT ITEM NO. SEE SCHEDULE FOR MORE INFO

FURNITURE/EQUIPMENT IDENTIFICATION

B222
27x24x36
ELEVATION MARKER, SEE ELEVATIONS ON SHEET A10.01
SIZE (WIDTH x DEPTH x HEIGHT)

CASEWORK IDENTIFICATION

GENERAL FLOOR PLAN NOTES

1. ACCESS DOORS SHALL BE INSTALLED IN WALLS AT ALL EQUIPMENT, VALVE OR OTHER LOCATIONS REQUIRING ACCESS FOR MAINTENANCE WHICH ARE LOCATED BEHIND FINISHED SURFACES. SEE SPECIFICATIONS FOR SPECIFIC REQUIREMENTS AND DIRECTIONS.
2. INSTALL GYPSUM WALLBOARD CONTROL JOINTS IN ACCORDANCE WITH ASTM C-840. (WHERE A PARTITION'S LENGTH RUNS IN AN UNINTERRUPTED STRAIGHT PLAN EXCEEDING 30 LINEAR FEET, CONTROL JOINTS SHALL BE INSTALLED 30'-0" ON CENTER MAXIMUM. INSTALL CONTROL JOINTS ALIGNED WITH DOOR JAMBS AND OR EDGE OF SOFFITS WHERE-EVER POSSIBLE. ALL GWB CONTROL JOINT LOCATIONS FOR WALLS AND SOFFITS SHALL MARKED UP ON SHOP DRAWINGS AND SUBMITTED TO THE ARCHITECT FOR APPROVAL PRIOR TO INSTALLATION.
3. WHERE ADJACENT WALLS HAVE DISSIMILAR # OF LAYERS OF GWB, INSTALL FINAL LAYERS OF GWB FLUSH.

GENERAL NOTES - ACCESSIBILITY

1. ALL PLUMBING UNDER LAVATORIES SHALL BE INSULATED SUCH THAT NO HOT, SHARP OR ABRASIVE SURFACES CAN CAUSE INJURY. SEE PLUMBING DWGS FOR MORE INFO.
2. LEVER OR PUSH OPERATED DEVICES ARE REQUIRED ON ALL FAUCETS; SELF CLOSING DEVICES ARE PERMITTED PROVIDED THE FAUCET REMAINS OPERATING FOR AT LEAST TEN (10) SECONDS. SEE PLUMBING DWGS FOR MORE INFO.

DRAWING CONVENTIONS LEGEND

EXISTING CONSTRUCTION
NEW NON RATED METAL STUDS CONSTRUCTION
EXISTING 1 HOUR RATED METAL STUDS CONSTRUCTION
EXISTING 2 HOUR RATED METAL STUDS CONSTRUCTION
CENTERLINE
BUILDING ELEMENTS ABOVE
23.4 EXISTING COLUMN GRID REFERENCE
ALIGN ALIGNMENT REFERENCE

GENERAL NOTES: DIMENSION CRITERIA

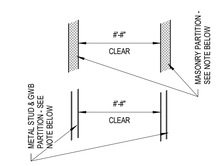

7. CLEAR DIMENSIONS ARE REQUIRED MINIMUM CLEAR WIDTHS BETWEEN FINISH FACES.

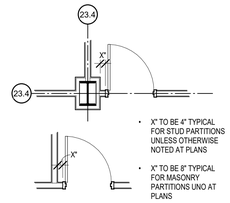

- X" TO BE 4" TYPICAL FOR STUD PARTITIONS UNLESS OTHERWISE NOTED AT PLANS
- X" TO BE 8" TYPICAL FOR MASONRY PARTITIONS UNO AT PLANS

8. FOR OPENINGS IN PARTITIONS OR WALLS:
   A. FOR OPENINGS CENTERED ON A COLUMN CENTERLINE NO DIMENSION WILL BE SHOWN ON THE PLAN, THE WIDTH IS ESTABLISHED BY CRITERIA ABOVE AND BY REQUIRED MINIMUMS FOR ADA CLEARANCE AT STRIKE SIDE OF DOOR.
   B. FOR OPENINGS ADJACENT TO A PARTITION INTERSECTION NO DIMENSION WILL BE SHOWN ON THE PLAN, THE WIDTH IS EASTABLISHED BY CRITERIA ABOVE AND BY REQUIRED MINIMUMS FOR ADA CLEARANCE AT STRIKE SIDE OF DOOR

TRUE NORTH
PROJECT NORTH

C:\Autodesk\Revit\2004800 - Arch - SC Education Lottery Upfit - Adjusted Scope - V19.2_lbajarias@ssoe.com.rvt :FILE PATH
10/20/2021 3:08:31 PM :PRINT DATE

ssoe®
S&W

PROFESSIONAL SEALS:

SOUTH CAROLINA CERTIFICATE OF AUTHORIZATION SSOE, INC No. 746

STATE OF SOUTH CAROLINA WILLIAM J. FLEMING Columbia SC No. 3452 REGISTERED ARCHITECT
8-6-2021

SUBMITTAL/REVISION SCHEDULE:

NO.	DATE	DESCRIPTION
	8.06.2021	CONSTRUCTION DOCUMENTS

■ APPROVED FOR CONSTRUCTION
□ NOT APPROVED FOR CONSTRUCTION

CLIENT INFORMATION:

SOUTH CAROLINA EDUCATION LOTTERY

South Carolina Education Lottery®

CLIENT PROJECT #:	20048.00
SCEL PROJECT #:	Y20-N001-CB

PROJECT INFORMATION:

4TH FLOOR UPFIT

1333 MAIN STREET, COLUMBIA, SOUTH CAROLINA

SSOE/SW PROJECT #:	021-00531-00
SSOE/SW MANAGER:	BILL FLEMING

SSOE | STEVENS & WILKINSON
1501 Main Street, Suite 730
Columbia, SC 29201
T. (803) 765-0320

THIS DRAWING IS THE PROPERTY OF SSOE | STEVENS & WILKINSON. UNAUTHORIZED USE OF ANY KIND, INCLUDING USE ON OTHER PROJECTS, IS PROHIBITED.
© SSOE, INC. 2021

LEVEL 4 FLOOR PLAN

A1.41

MOUNTING HEIGHTS

1. INSTALL ALL ITEMS IN ACCORDANCE WITH THIS DRAWING
2. WHERE DIMENSIONS PROVIDED VARY FROM MANUFACTURER'S RECOMMENDATIONS FOR ADA BARRIER FREE MOUNTING HEIGHTS, THE MANUFACTURER'S RECOMMENDATIONS WILL BE THE STANDARD.
3. DIMENSIONS ARE TO TOP OF FINISH FLOOR
4. MAINTAIN INTEGRITY OF FIRE RATING WHERE ACCESSORIES ARE MOUNTED IN RATED WALLS
5. PROVIDE WOOD BLOCKING FOR ALL ACCESSORIES MOUNTED ON GWB PARTITION.

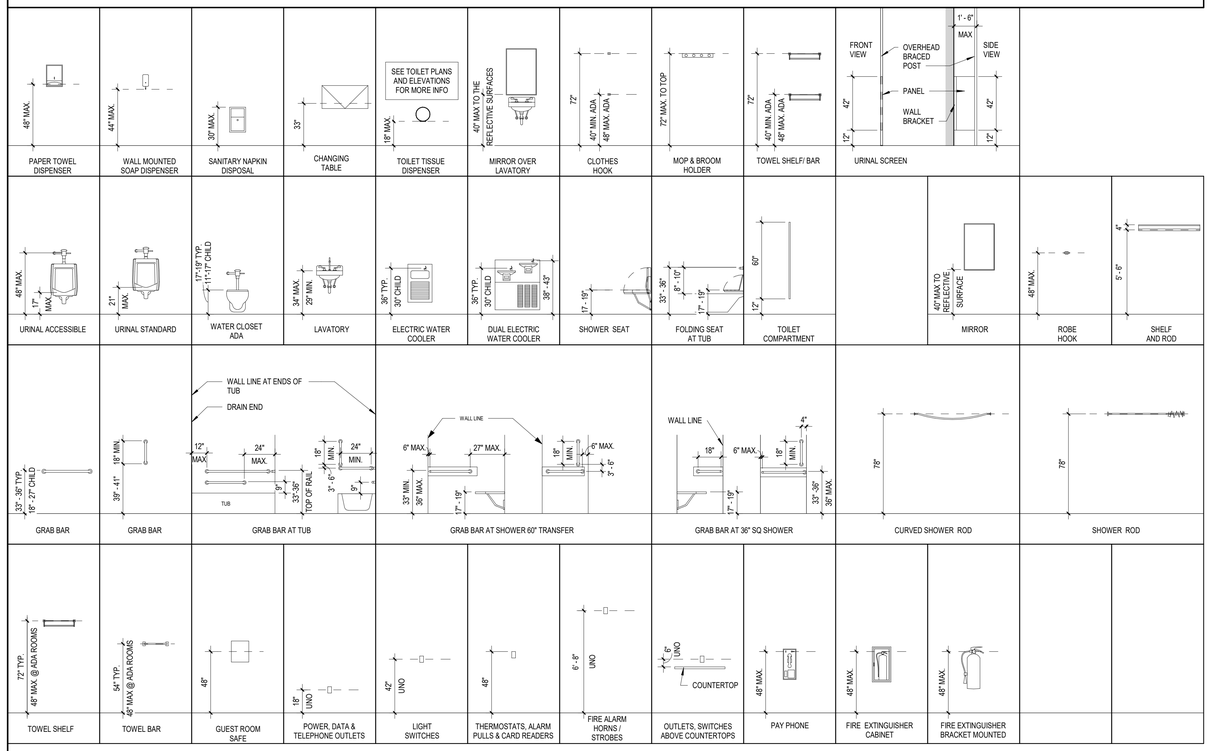

1 TYPICAL MOUNTING HEIGHTS
1/4" = 1'-0"

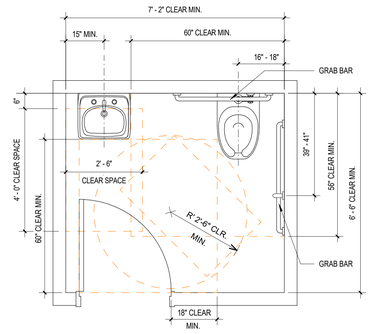

ACCESSIBLE TOILET ROOM

3 MIN. CLEARANCES AT ADA TOILET ROOMS
1/2" = 1'-0"

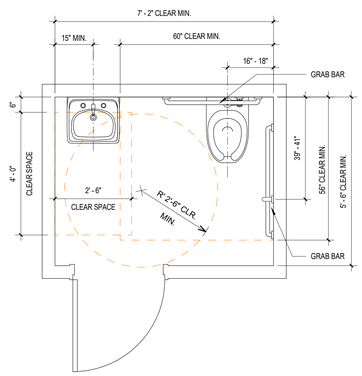

ACCESSIBLE TOILET ROOM

4 MIN. CLEARANCES AT ADA TOILET ROOMS
1/2" = 1'-0"

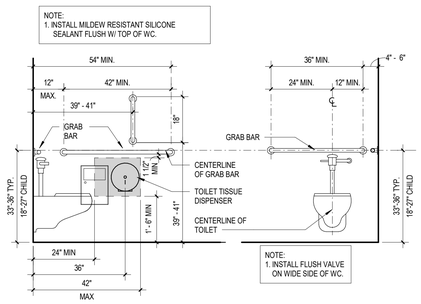

8 ADA TOILET & GRAB BAR ELEVATIONS
1/2" = 1'-0"

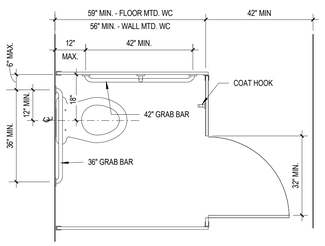

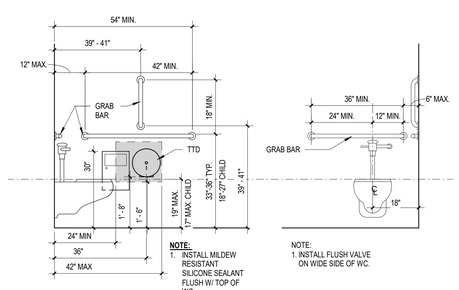

6 ADA TOILET PARTITION PLANS & ELEVATIONS
1/2" = 1'-0"

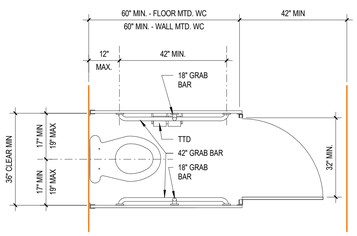

7 ADA AMBULATORY TOILET PARITTION PLANS
1/2" = 1'-0"

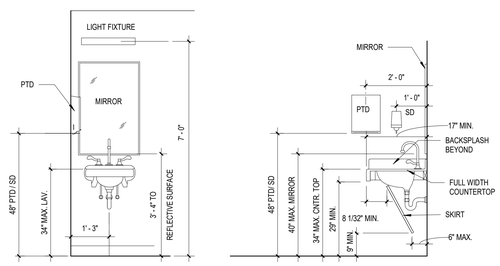

NOTES:
1. 1. INSTALL INSULATED BOOT ON HOT WATER & DRAIN LINES AT ALL WALL MTD. LAVATORIES & COUNTER MOUNTED SINKS.
2. INSTALL MILDEW RESISTANT SILICONE SEALANT FLUSH W/ TOP OF LAVATORY.

9 TYP WALL MOUNTED LAVATORY ELEVATION(S)
1/2" = 1'-0"

SSOE
S&W

PROFESSIONAL SEALS:

SOUTH CAROLINA CERTIFICATE OF AUTHORIZATION SSOE, INC No. 746

STATE OF SOUTH CAROLINA WILLIAM J. FLEMING Columbia SC No. 3452 REGISTERED ARCHITECT
8-6-2021

SUBMITTAL/REVISION SCHEDULE:

NO.	DATE	DESCRIPTION
	8.06.2021	CONSTRUCTION DOCUMENTS

■ APPROVED FOR CONSTRUCTION
□ NOT APPROVED FOR CONSTRUCTION

CLIENT INFORMATION:

SOUTH CAROLINA EDUCATION LOTTERY

South Carolina Education Lottery®

CLIENT PROJECT #:	20048.00
SCEL PROJECT #:	Y20-N001-CB

PROJECT INFORMATION:

4TH FLOOR UPFIT

1333 MAIN STREET, COLUMBIA, SOUTH CAROLINA

SSOE/SW PROJECT #:	021-00531-00
SSOE/SW MANAGER:	BILL FLEMING

SSOE | STEVENS & WILKINSON
1501 Main Street, Suite 730
Columbia, SC 29201
T. (803) 765-0320

THIS DRAWING IS THE PROPERTY OF SSOE | STEVENS & WILKINSON. UNAUTHORIZED USE OF ANY KIND, INCLUDING USE ON OTHER PROJECTS, IS PROHIBITED.
© SSOE, INC. 2021

ANSI ADA ACCESSIBLE DETAILS

A5-00A

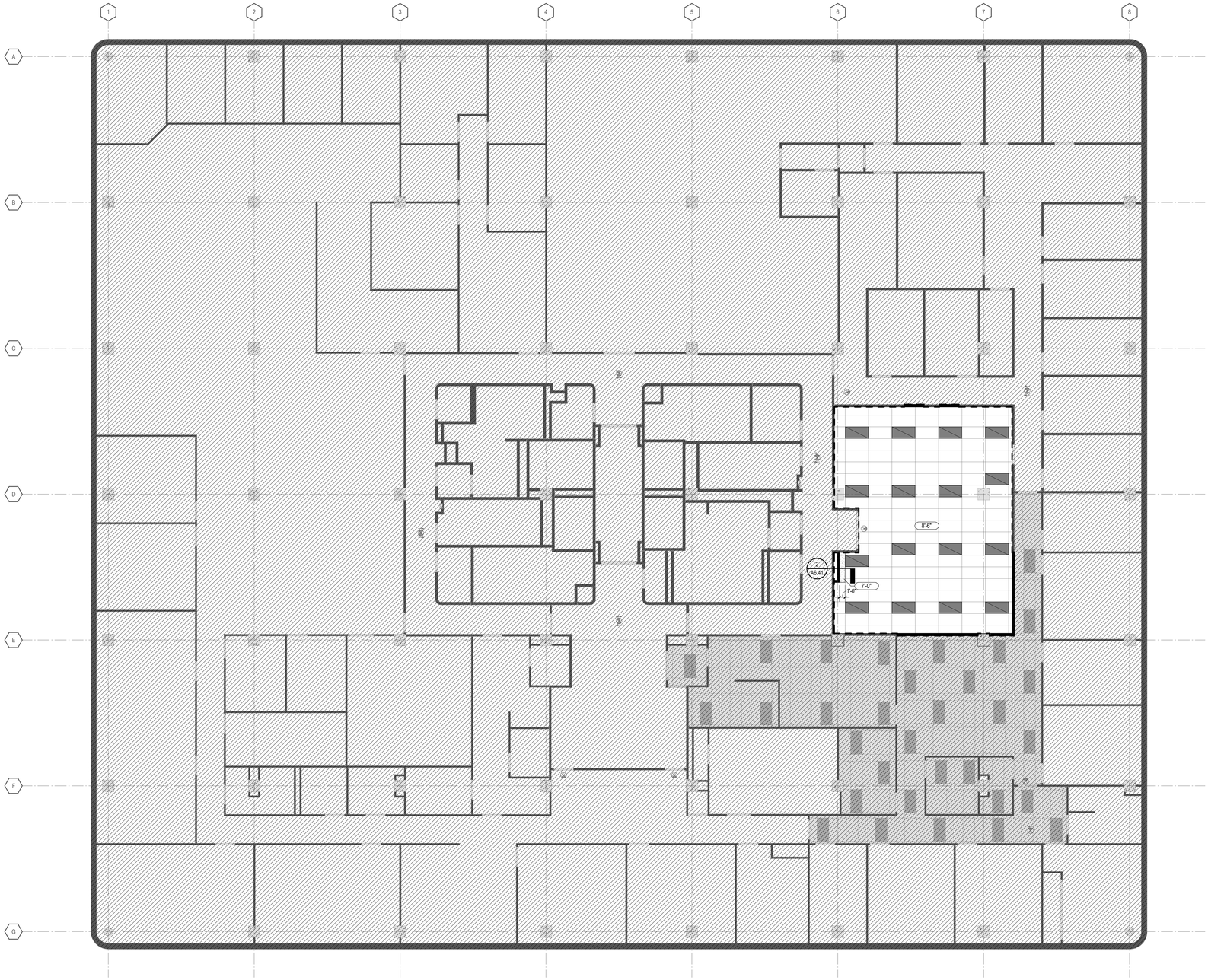

1 LEVEL 4 OVERALL RCP
1/8" = 1'-0"

GENERAL RCP NOTES

1. ALL CEILINGS ARE 8'-6" AFF UNO.
2. LAY CEILING GRIDS AS SHOWN ON REFLECTED CEILING PLANS. EACH ROOM GRID IS PLANNED FOR MAXIMUM TILE SIZE AND OPTIMUM LIGHTING LAYOUT.
3. SEE ELECTRICAL AND MECHANICAL DRAWINGS FOR LIGHTING AND HVAC INFORMATION.
4. NO DEVICES, DAMPERS, VALVES, PUMPS, ETC ARE TO BE LOCATED ABOVE SPACES WITH GWB CEILINGS. WHERE POSSIBLE, ACCESS TO JUNCTION BOXES FOR LIGHTS IS TO BE THROUGH FIXTURES. ALL DEVICES REQUIRING ACCESS ARE TO BE LOCATED IN ADJACENT SPACES WITH ACCESSIBLE CEILING SYSTEMS.
5. REFER TO ELECTRICAL DRAWINGS FOR FULL EXTENT OF EXITING DEVICES, INCLUDING WALL MOUNTED DEVICES.
6. BRACE ALL SUSPENDED CEILINGS FOR SEISMIC RESISTANCE IN ACCORDANCE WITH CODE REQUIREMENTS AND AS DETAILED.
7. ALL CEILING CAVITY AREAS USED AS RETURN AIR PLENUMS SHALL BE CONSTRUCTED WITH FIRE RESISTANT MATERIALS AND SHALL ONLY CONTAIN MATERIALS WHICH HAVE SMOKE DEVELOPED RATINGS NOT GREATER THAN 50 AND FLAME SPREAD RATINGS NOT GREATER THAN 25 AS DETERMINED IN ACCORDANCE WITH ASTM 84.
8. DO NOT USE PVC PIPE IN RETURN AIR PLENUMS.
9. ALL AREAS ABOVE CEILING SHALL BE FREE OF ACCUMULATIONS OF MUD, DUST, DIRT, CONSTRUCTION DEBRIS, ETC. CLEAN TOP SURFACES OF DUCTWORK, LIGHTS, PIPING, CONDUIT, AND OTHER CONSTRUCTION TO PROVIDE CLEAN SURFACE
10. ANY AREA ABOVE CEILING EXPOSED TO VIEW FROM BELOW SHALL BE NO LESS THAN PRIME PAINTED.
11. REPLACE DAMAGED EXISTING CEILING TILES WITHIN INDICATED WORK AREA AS NEEDED.

RCP LEGEND

2' x 4' ACOUSTICAL CEILING PANEL.
SEE CEILING TAG FOR TYPE

2'X5 EXISTING CEILING TO REMAIN

GYPSUM WALLBOARD CEILING

EXIT LIGHT FIXTURE - NEW
SEE ELECTRICAL DWGS.

EXIT LIGHT FIXTURE - EXISTING TO REMAIN
SEE ELECTRICAL DWGS.

NEW 2X4 TROFFER
SEE ELECTRICAL DWGS.

EXISTING 2X4 TROFFER TO REMAIN
SEE ELECTRICAL DWGS.

PROFESSIONAL SEALS:

SOUTH CAROLINA
SSOE, INC
No. 746
CERTIFICATE OF AUTHORIZATION

STATE OF SOUTH CAROLINA
WILLIAM J. FLEMING
Columbia, SC
No. 3452
REGISTERED ARCHITECT

8-6-2021

SUBMITTAL/REVISION SCHEDULE:

NO.	DATE	DESCRIPTION
	8.06.2021	CONSTRUCTION DOCUMENTS

■ APPROVED FOR CONSTRUCTION
□ NOT APPROVED FOR CONSTRUCTION

CLIENT INFORMATION:

SOUTH CAROLINA EDUCATION LOTTERY

CLIENT PROJECT #:	20048.00
SCEL PROJECT #:	Y20-N001-CB

PROJECT INFORMATION:

4TH FLOOR UPFIT

1333 MAIN STREET, COLUMBIA, SOUTH CAROLINA

SSOE/SW PROJECT #:	021-00531-00
SSOE/SW MANAGER:	BILL FLEMING

SSOE | STEVENS & WILKINSON
1501 Main Street, Suite 730
Columbia, SC 29201
T. (803) 765-0320

THIS DRAWING IS THE PROPERTY OF SSOE | STEVENS & WILKINSON. UNAUTHORIZED USE OF ANY KIND, INCLUDING USE ON OTHER PROJECTS, IS PROHIBITED.
© SSOE, INC. 2021

LEVEL 4 OVERALL REFLECTED CEILING PLAN

A6.40

C:\Autodesk\Revit\2004800 - Arch - SC Education Lottery Upfit - Adjusted Scope - V19.2_lbajarias@ssoe.com.rvt :**FILE PATH**
10/20/2021 3:08:34 PM :**PRINT DATE**

1 Level 4 - RCP
1/4" = 1'-0"

GENERAL RCP NOTES

1. ALL CEILINGS ARE 8'-6" AFF UNO.
2. LAY CEILING GRIDS AS SHOWN ON REFLECTED CEILING PLANS. EACH ROOM GRID IS PLANNED FOR MAXIMUM TILE SIZE AND OPTIMUM LIGHTING LAYOUT.
3. SEE ELECTRICAL AND MECHANICAL DRAWINGS FOR LIGHTING AND HVAC INFORMATION.
4. NO DEVICES, DAMPERS, VALVES, PUMPS, ETC ARE TO BE LOCATED ABOVE SPACES WITH GWB CEILINGS. WHERE POSSIBLE, ACCESS TO JUNCTION BOXES FOR LIGHTS IS TO BE THROUGH FIXTURES. ALL DEVICES REQUIRING ACCESS ARE TO BE LOCATED IN ADJACENT SPACES WITH ACCESSIBLE CEILING SYSTEMS.
5. REFER TO ELECTRICAL DRAWINGS FOR FULL EXTENT OF EXITING DEVICES, INCLUDING WALL MOUNTED DEVICES.
6. BRACE ALL SUSPENDED CEILINGS FOR SEISMIC RESISTANCE IN ACCORDANCE WITH CODE REQUIREMENTS AND AS DETAILED.
7. ALL CEILING CAVITY AREAS USED AS RETURN AIR PLENUMS SHALL BE CONSTRUCTED WITH FIRE RESISTANT MATERIALS AND SHALL ONLY CONTAIN MATERIALS WHICH HAVE SMOKE DEVELOPED RATINGS NOT GREATER THAN 50 AND FLAME SPREAD RATINGS NOT GREATER THAN 25 AS DETERMINED IN ACCORDANCE WITH ASTM 84.
8. DO NOT USE PVC PIPE IN RETURN AIR PLENUMS.
9. ALL AREAS ABOVE CEILING SHALL BE FREE OF ACCUMULATIONS OF MUD, DUST, DIRT, CONSTRUCTION DEBRIS, ETC. CLEAN TOP SURFACES OF DUCTWORK, LIGHTS, PIPING, CONDUIT, AND OTHER CONSTRUCTION TO PROVIDE CLEAN SURFACE
10. ANY AREA ABOVE CEILING EXPOSED TO VIEW FROM BELOW SHALL BE NO LESS THAN PRIME PAINTED.
11. REPLACE DAMAGED EXISTING CEILING TILES WITHIN INDICATED WORK AREA AS NEEDED.

RCP LEGEND

2' x 4' ACOUSTICAL CEILING PANEL. SEE CEILING TAG FOR TYPE

2'X5 EXISTING CEILING TO REMAIN

GYPSUM WALLBOARD CEILING

EXIT LIGHT FIXTURE - NEW SEE ELECTRICAL DWGS.

EXIT LIGHT FIXTURE - EXISTING TO REMAIN SEE ELECTRICAL DWGS.

NEW 2X4 TROFFER SEE ELECTRICAL DWGS.

EXISTING 2X4 TROFFER TO REMAIN SEE ELECTRICAL DWGS.

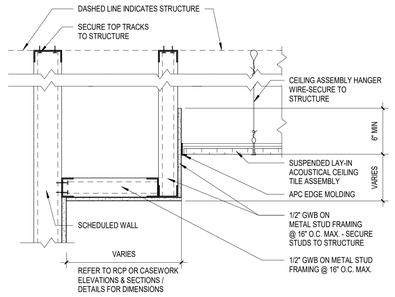

2 GWB SOFFIT DETAIL - APC CLNG
1 1/2" = 1'-0"

ssoe®

S&W

PROFESSIONAL SEALS:

SOUTH CAROLINA CERTIFICATE OF AUTHORIZATION SSOE, INC No. 746

STATE OF SOUTH CAROLINA WILLIAM J. FLEMING Columbia SC No. 3652 REGISTERED ARCHITECT

8-6-2021

SUBMITTAL/REVISION SCHEDULE:

NO.	DATE	DESCRIPTION
	8.06.2021	CONSTRUCTION DOCUMENTS

■ APPROVED FOR CONSTRUCTION
□ NOT APPROVED FOR CONSTRUCTION

CLIENT INFORMATION:

SOUTH CAROLINA EDUCATION LOTTERY

South Carolina Education Lottery®

CLIENT PROJECT #:	20048.00
SCEL PROJECT #:	Y20-N001-CB

PROJECT INFORMATION:

4TH FLOOR UPFIT

1333 MAIN STREET, COLUMBIA, SOUTH CAROLINA

SSOE/SW PROJECT #:	021-00531-00
SSOE/SW MANAGER:	BILL FLEMING

SSOE | STEVENS & WILKINSON
1501 Main Street, Suite 730
Columbia, SC 29201
T. (803) 765-0320

THIS DRAWING IS THE PROPERTY OF SSOE | STEVENS & WILKINSON. UNAUTHORIZED USE OF ANY KIND, INCLUDING USE ON OTHER PROJECTS, IS PROHIBITED.
© SSOE, INC. 2021

LEVEL 4 REFLECTED CEILING PLAN

A6.41

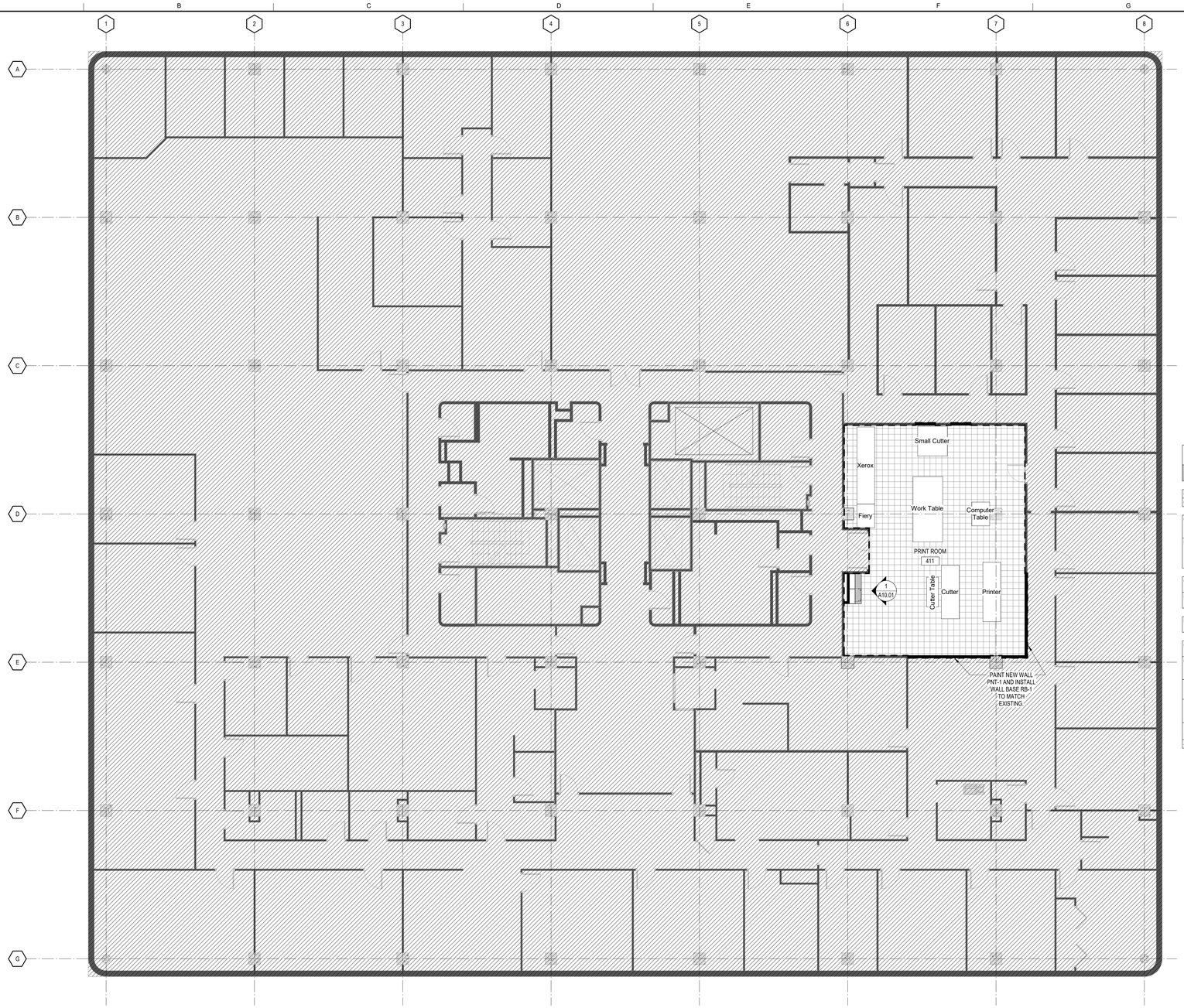

1 4TH FLOOR OVERALL PLAN
1/8" = 1'-0"

GENERAL FINISH NOTES

1. PAINT ALL FERROUS METAL EXPOSED TO MOISTURE, EXCEPT PREFINISHED METAL.
2. PAINT ALL STEEL STAIR SURFACES EXPOSED TO VIEW OR MOISTURE.
3. PAINT ALL NEW EXTERIOR HOLLOW METAL FRAMES AND DOORS IN ACCORDANCE WITH THE PAINTING SPECIFICATIONS AND IN COLOR INDICATED.
4. AT ALL TRANSITIONS BETWEEN DIFFERENT FLOOR FINISH MATERIALS, INSTALL SILLS OR THRESHOLDS AND/OR TERMINATE MATERIALS AS INDICATED ON THE TYPICAL TERMINATIONS DETAIL LEGEND. SEE SHEET **A10.01**.
5. AT ALL MILLWORK BASE CABINETS, PROVIDE BASE AS SCHEDULE FOR ADJACENT WALLS UNO.
6. REMOVE CURING COMPOUNDS FROM ALL CONCRETE SLABS IN ACCORDANCE WITH MANUFACTURER RECOMMENDATIONS PRIOR TO THE INSTALLATION OF ANY FLOOR FINISH MATERIALS.
7. MOISTURE TEST ALL NEW AND EXISTING CONCRETE SLABS ON GRADE PRIOR TO INSTALLATION OF ANY FLOOR FINISH MATERIALS. DO NOT INSTALL FINISHES UNLESS THE MOISTURE EMISSION RATE IS ACCEPTABLE TO THE FINISH MANUFACTURER AND MAINTAINS ALL WARRANTIES. PERFORM TESTS AS SPECIFIED. SCHEDULE SLAB POURS AND TESTS TO ALLOW PROPER CURING AND TESTING TIMES WITHOUT DELAYS TO THE OVERALL SCHEDULE.

FINISH LEGEND

- VCT-1 — 12X12 VINYL COMPOSITION TILE
- CPT-1 — BROADLOOM CARPET
- EXISTING CARPET TO REMAIN — BROADLOOM CARPET
- AREA NOT IN CONTRACT

FINISH LEGEND

SPECIFICATION SECTION	CODE	MANUFACTURER	PATTERN	COLOR	NOTES
064116	PLAM-1	WILSONART	1500-60	GREY	MILLWORK - VERTICAL
064116	PLAM-2	WILSONART	4845-60	TWILIGHT ZEPHER	MILLWORK - HORIZONTAL
095113	ACT-1	ARMSTRONG	MATCH EXISTING	WHITE	2X5 SQUARE LAY-IN ACOUSTICAL TILE .70 NRC OR GREATER
095113	ACT-1 GRID	ARMSTRONG	MATCH EXISTING	WHITE	ALTERNATE SEISMIC C OR D INSTALLATION WITH 7/8" WALL MOLDING AND CLIPS - SEE SITE SEISMIC CATAGORY
096513	RB-1	ROPPE	700 SERIES	177 STEEL BLUE	EXISTING OPEN OFFICE - 4" COVED WALL BASE
096513	RB-2	ROPPE	700 SERIES	640 CREEKBED	PRINT ROOM - 4" COVED WALL BASE
096519	VCT-1	ARMSTRONG	STANDARD EXCELON IMPERIAL TEXTURE	51911 CLASSIC WHITE	12X12 TILES
099123	PNT-1	SHERWIN WILLIAMS	SW7036	ACCESSIBLE BEIGE	EXISTING OPEN OFFICE PAINT - EGG SHELL
099123	PNT-1A	SHERWIN WILLAIMS	SW7036	ACCESSIBLE BEIGE	LIGHT INDUSTRIAL COATING - SW PRO INDUSTRIAL OR EQUAL - MP#151

ROOM FINISH SCHEDULE

ROOM NO.	ROOM NAME	FINISHES				COMMENTS	REV.
		WALLS	CEILINGS	FLOORS	WALL BASE		
LEVEL 4							
411	PRINT ROOM	PNT-1A	ACT-1	VCT-1	RB-2		

ssoe®

S&W

PROFESSIONAL SEALS:

SOUTH CAROLINA — SSOE, INC No. 746 — CERTIFICATE OF AUTHORIZATION

STATE OF SOUTH CAROLINA — WILLIAM J. FLEMING — Columbia SC — No. 3452 — REGISTERED ARCHITECT — 8-6-2021

SUBMITTAL/REVISION SCHEDULE:

NO.	DATE	DESCRIPTION
	8.06.2021	CONSTRUCTION DOCUMENTS

■ APPROVED FOR CONSTRUCTION
□ NOT APPROVED FOR CONSTRUCTION

CLIENT INFORMATION:

SOUTH CAROLINA EDUCATION LOTTERY

South Carolina Education Lottery®

CLIENT PROJECT #:	20048.00
SCEL PROJECT #:	Y20-N001-CB

PROJECT INFORMATION:

4TH FLOOR UPFIT

1333 MAIN STREET, COLUMBIA, SOUTH CAROLINA

SSOE/SW PROJECT #:	021-00531-00
SSOE/SW MANAGER:	BILL FLEMING

SSOE | STEVENS & WILKINSON
1501 Main Street, Suite 730
Columbia, SC 29201
T. (803) 765-0320

THIS DRAWING IS THE PROPERTY OF SSOE | STEVENS & WILKINSON. UNAUTHORIZED USE OF ANY KIND, INCLUDING USE ON OTHER PROJECTS, IS PROHIBITED.

© SSOE, INC. 2021

LEVEL 4 FINISH FLOOR OVERALL PLAN

A9.40

C:\Autodesk\Revit\2004800 - Arch - SC Education Lottery Upfit - Adjusted Scope - V19.2_lbajarias@ssoe.com.rvt :**FILE PATH**
10/20/2021 3:08:37 PM :**PRINT DATE**

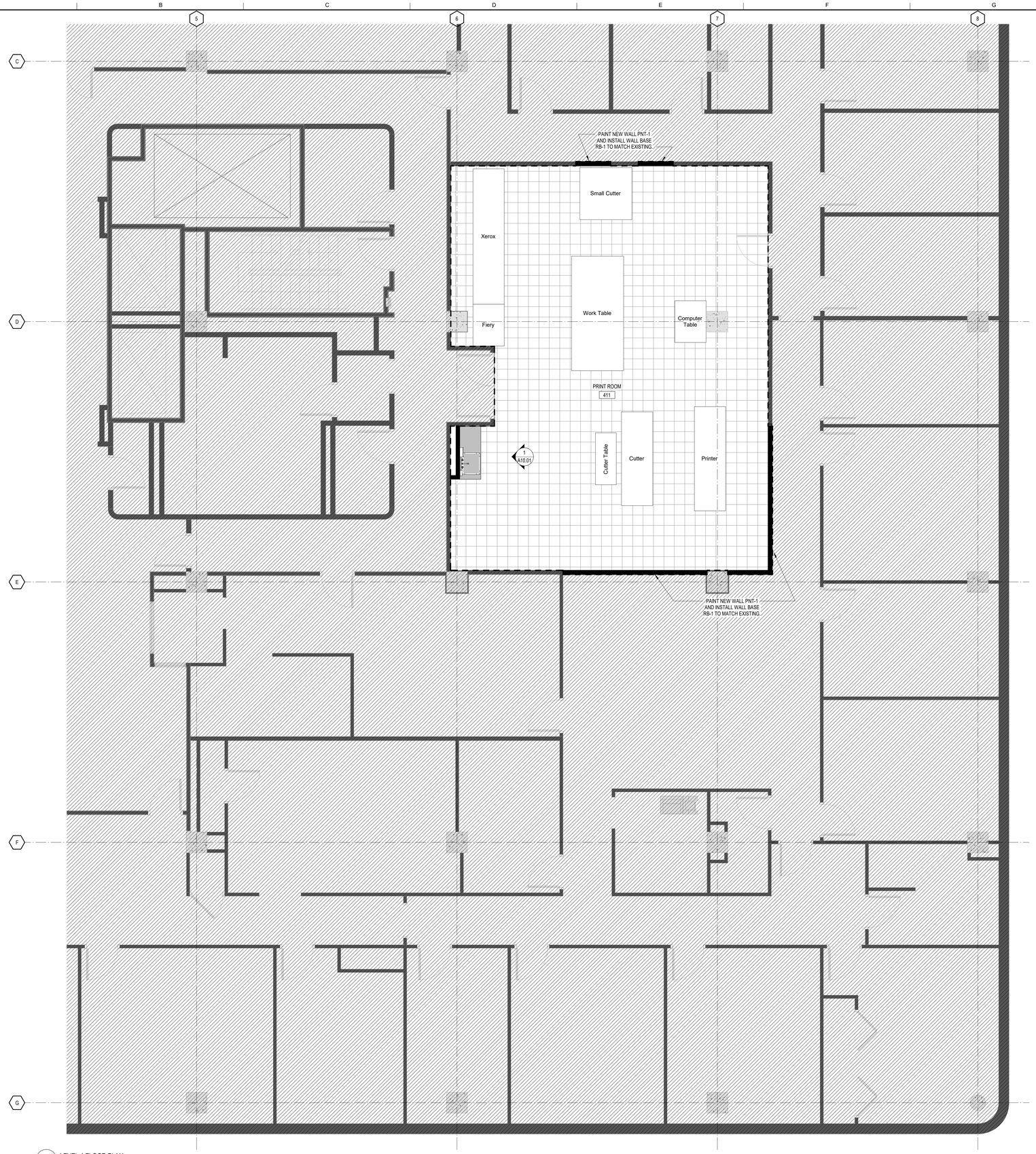

1 LEVEL 4 FLOOR PLAN
1/4" = 1'-0"

GENERAL FINISH NOTES

1. PAINT ALL FERROUS METAL EXPOSED TO MOISTURE, EXCEPT PREFINISHED METAL.
2. PAINT ALL STEEL STAIR SURFACES EXPOSED TO VIEW OR MOISTURE.
3. PAINT ALL NEW EXTERIOR HOLLOW METAL FRAMES AND DOORS IN ACCORDANCE WITH THE PAINTING SPECIFICATIONS AND IN COLOR INDICATED.
4. AT ALL TRANSITIONS BETWEEN DIFFERENT FLOOR FINISH MATERIALS, INSTALL SILLS OR THRESHOLDS AND/OR TERMINATE MATERIALS AS INDICATED ON THE TYPICAL TERMINATIONS DETAIL LEGEND. SEE SHEET **A10.01**.
5. AT ALL MILLWORK BASE CABINETS, PROVIDE BASE AS SCHEDULE FOR ADJACENT WALLS UNO.
6. REMOVE CURING COMPOUNDS FROM ALL CONCRETE SLABS IN ACCORDANCE WITH MANUFACTURER RECOMMENDATIONS PRIOR TO THE INSTALLATION OF ANY FLOOR FINISH MATERIALS.
7. MOISTURE TEST ALL NEW AND EXISTING CONCRETE SLABS ON GRADE PRIOR TO INSTALLATION OF ANY FLOOR FINISH MATERIALS. DO NOT INSTALL FINISHES UNLESS THE MOISTURE EMISSION RATE IS ACCEPTABLE TO THE FINISH MANUFACTURER AND MAINTAINS ALL WARRANTIES. PERFORM TESTS AS SPECIFIED. SCHEDULE SLAB POURS AND TESTS TO ALLOW PROPER CURING AND TESTING TIMES WITHOUT DELAYS TO THE OVERALL SCHEDULE.

FINISH LEGEND

VCT-1
12X12 VINYL COMPOSITION TILE

CPT-1
BROADLOOM CARPET

EXISTING CARPET TO REMAIN
BROADLOOM CARPET

AREA NOT IN CONTRACT

FINISH LEGEND

SPECIFICATION SECTION	CODE	MANUFACTURER	PATTERN	COLOR	NOTES
064116	PLAM-1	WILSONART	1500-60	GREY	MILLWORK - VERTICAL
064116	PLAM-2	WILSONART	4845-60	TWILIGHT ZEPHER	MILLWORK - HORIZONTAL
095113	ACT-1	ARMSTRONG	MATCH EXISTING	WHITE	2X5 SQUARE LAY-IN ACOUSTICAL TILE .70 NRC OR GREATER
095113	ACT-1 GRID	ARMSTRONG	MATCH EXISTING	WHITE	ALTERNATE SEISMIC C OR D INSTALLATION WITH 7/8" WALL MOLDING AND CLIPS - SEE SITE SEISMIC CATAGORY
096513	RB-1	ROPPE	700 SERIES	177 STEEL BLUE	EXISTING OPEN OFFICE - 4" COVED WALL BASE
096513	RB-2	ROPPE	700 SERIES	640 CREEKBED	PRINT ROOM - 4" COVED WALL BASE
096519	VCT-1	ARMSTRONG	STANDARD EXCELON IMPERIAL TEXTURE	51911 CLASSIC WHITE	12X12 TILES
099123	PNT-1	SHERWIN WILLIAMS	SW7036	ACCESSIBLE BEIGE	EXISTING OPEN OFFICE PAINT - EGG SHELL
099123	PNT-1A	SHERWIN WILLAIMS	SW7036	ACCESSIBLE BEIGE	LIGHT INDUSTRIAL COATING - SW PRO INDUSTRIAL OR EQUAL - MP#151

ROOM FINISH SCHEDULE

ROOM NO.	ROOM NAME	FINISHES				COMMENTS	REV.
		WALLS	CEILINGS	FLOORS	WALL BASE		
LEVEL 4							
411	PRINT ROOM	PNT-1A	ACT-1	VCT-1	RB-2		

ssoe®

S&W

PROFESSIONAL SEALS:

SOUTH CAROLINA SSOE, INC No. 746 CERTIFICATE OF AUTHORIZATION

STATE OF SOUTH CAROLINA WILLIAM J. FLEMING Columbia SC No. 3452 REGISTERED ARCHITECT

8-6-2021

SUBMITTAL/REVISION SCHEDULE:

NO.	DATE	DESCRIPTION
	8.06.2021	CONSTRUCTION DOCUMENTS

■ APPROVED FOR CONSTRUCTION
□ NOT APPROVED FOR CONSTRUCTION

CLIENT INFORMATION:

SOUTH CAROLINA EDUCATION LOTTERY

South Carolina Education Lottery®

CLIENT PROJECT #:	20048.00
SCEL PROJECT #:	Y20-N001-CB

PROJECT INFORMATION:

4TH FLOOR UPFIT

1333 MAIN STREET, COLUMBIA, SOUTH CAROLINA

SSOE/SW PROJECT #:	021-00531-00
SSOE/SW MANAGER:	BILL FLEMING

SSOE® | STEVENS & WILKINSON
1501 Main Street, Suite 730
Columbia, SC 29201
T. (803) 765-0320

THIS DRAWING IS THE PROPERTY OF SSOE | STEVENS & WILKINSON. UNAUTHORIZED USE OF ANY KIND, INCLUDING USE ON OTHER PROJECTS, IS PROHIBITED.

© SSOE, INC. 2021

LEVEL 4 FINISH FLOOR PLAN

A9.41

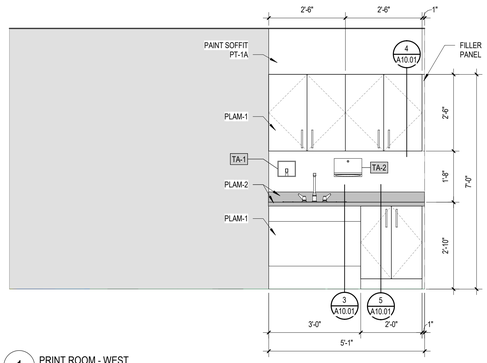

1 PRINT ROOM - WEST
1/2" = 1'-0"

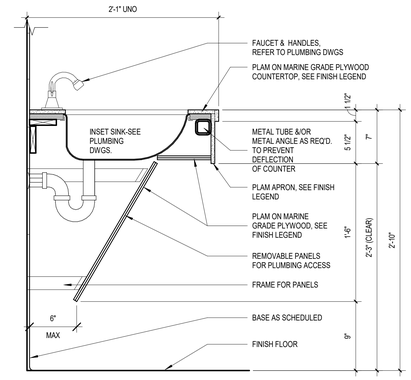

3 BASE SINK CABINET DETAIL
1 1/2" = 1'-0"

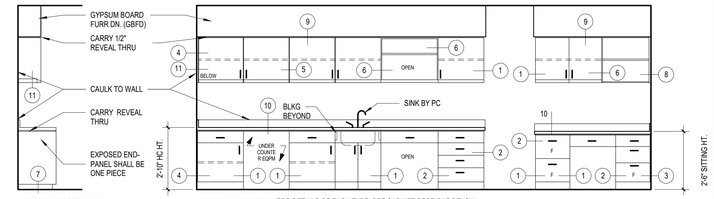

TYPICAL EXPOSED END

TYPICAL ELEVATIONS FOR DETAILS OF EACH TYPE, SEE CABINET SECTIONS BELOW; WHERE COUNTER TOP ABUTS WALL, PROVIDE END SPLASH

TOILET ACCESSORIES SCHEDULE - ALTERNATE #1

ITEM #	DESCRIPTION	MFR.	MODEL #	PROVIDED BY
TA-1	CONTURA SERIES SURFACE MOUNTED SOAP DISPENSER	BOBRICK	B-4112	CFCI
TA-2	SURFACE MOUNTED PAPER TOWEL DISPENSER - 10.75" W X 7.125" H X 4" DEEP	BOBRICK	B-2621	CFCI

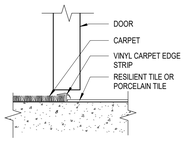

2 CPT TO VCT
3" = 1'-0"

FLOORING TRANSITION DETAIL LEGEND

	CARPET	PORCELAIN TILE	RESILIENT TILE (RTF)	QUARRY TILE	CERAMIC TILE	CONCRETE	TERRAZZO	ATHLETIC FLOOR	RESINOUS	EXTERIOR
CARPET	--		T1	--	--	--	--	--	--	--
PORCELAIN TILE	--	--		--	--	--	--	--	--	--
RESILIENT TILE	--	--	--	--	--	--	--	--	--	--
QUARRY TILE	--	--	--	--	--	--	--	--	--	--
CERAMIC TILE	--	--	--	--	--	--	--	--	--	--
CONCRETE	--	--	--	--	--	--	--	--	--	--
TERRAZZO	--	--	--	--	--	--	--	--	--	--
ATHLETIC FLOOR	--	--	--	--	--	--	--	--	--	--
RESINOUS	--	--	--	--	--	--	--	--	--	--
EXTERIOR	--	--	--	--	--	--	--	--	--	--

NOTE:
AT ALL TRANSITIONS BETWEEN FLOOR MATERIALS, INSTALL SILLS OR THRESHOLDS, AND OR TERMINATION MATERIALS AS INDICATED ON THESE DRAWINGS OR AS OTHERWISE RECOMMENDED BY MANUFACTURER'S WRITTEN INSTRUCTIONS.

NOTE:
ALL INTERIOR SURFACES TO BE FINISHED WITH WHITE CABINET LINER UNO

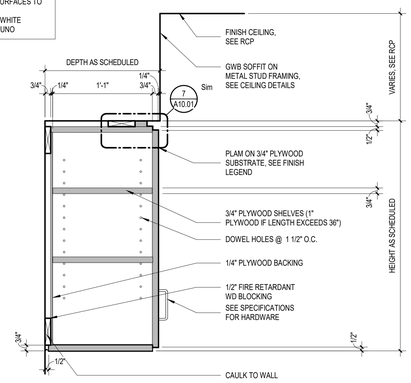

4 UPPER CABINET CLOSED SHELVING
1 1/2" = 1'-0"

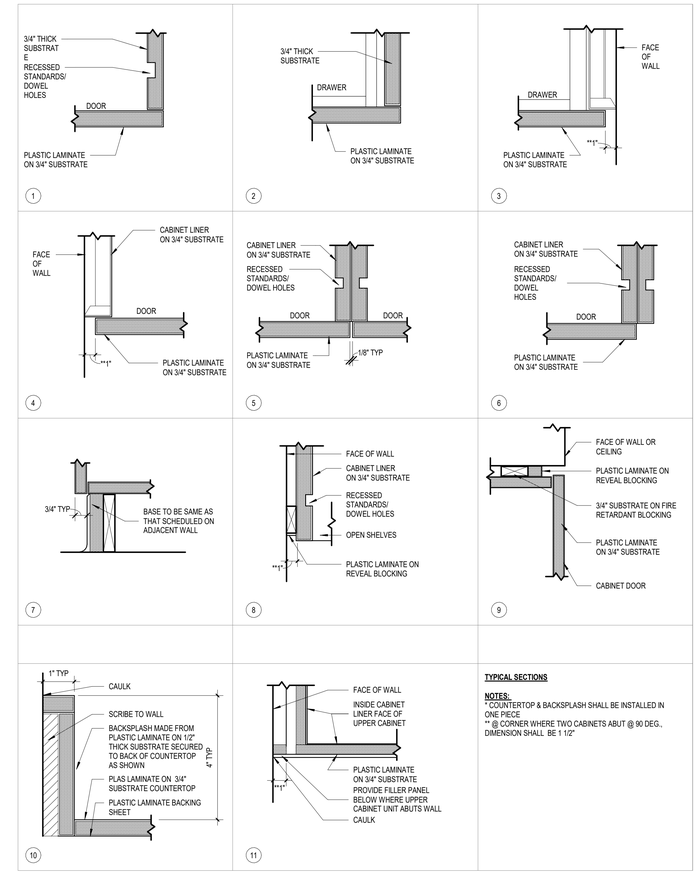

TYPICAL SECTIONS

NOTES:
* COUNTERTOP & BACKSPLASH SHALL BE INSTALLED IN ONE PIECE
** @ CORNER WHERE TWO CABINETS ABUT @ 90 DEG., DIMENSION SHALL BE 1 1/2"

6 MIL-TYPICAL MILLWORK OVERLAY ELEVATIONS & SECTIONS
1 1/2" = 1'-0"

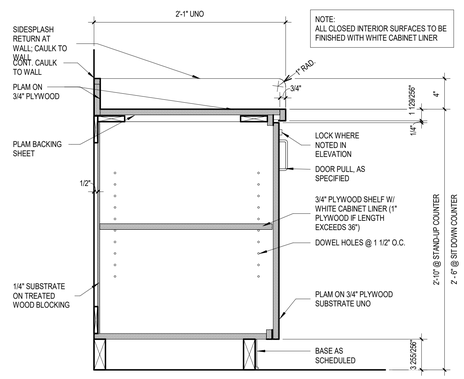

5 BASE CABINET DETAIL - DOORS
1 1/2" = 1'-0"

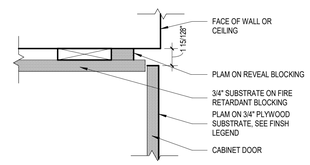

7 CABINET @ SOFFIT DETAIL
3" = 1'-0"

SSOE®
S&W

PROFESSIONAL SEALS:

SOUTH CAROLINA CERTIFICATE OF AUTHORIZATION SSOE, INC No. 746

STATE OF SOUTH CAROLINA WILLIAM J. FLEMING Columbia, SC No. 3452 REGISTERED ARCHITECT
8-6-2021

SUBMITTAL/REVISION SCHEDULE:

NO.	DATE	DESCRIPTION
	8.06.2021	CONSTRUCTION DOCUMENTS

■ APPROVED FOR CONSTRUCTION
□ NOT APPROVED FOR CONSTRUCTION

CLIENT INFORMATION:

SOUTH CAROLINA EDUCATION LOTTERY

South Carolina Education Lottery®

CLIENT PROJECT #:	20048.00
SCEL PROJECT #:	Y20-N001-CB

PROJECT INFORMATION:

4TH FLOOR UPFIT

1333 MAIN STREET, COLUMBIA, SOUTH CAROLINA

SSOE/SW PROJECT #:	021-00531-00
SSOE/SW MANAGER:	BILL FLEMING

SSOE® | STEVENS & WILKINSON
1501 Main Street, Suite 730
Columbia, SC 29201
T. (803) 765-0320

THIS DRAWING IS THE PROPERTY OF SSOE | STEVENS & WILKINSON. UNAUTHORIZED USE OF ANY KIND, INCLUDING USE ON OTHER PROJECTS, IS PROHIBITED.
© SSOE, INC. 2021

MILLWORK SECTIONS & DETAILS

A10.01

1 LEVEL 4 DEMOLITION PLAN
1/4" = 1'-0"

DEMOLITION LEGEND

B01	KEYNOTE - SEE KEYNOTE LEGEND
	AREA OF "NO WORK"
	AREA OF DEMOLITION AS DESCRIBED
	CONSTRUCTION TO BE DEMOLISHED (PLAN) [SEE KEYNOTES FOR MORE DETAIL]
	EXISTING EXTERIOR CONSTRUCTION (PLAN)
	EXISTING INTERIOR NON-RATED CONSTRUCTION
	EXISTING INTERIOR 1 HOUR CONSTRUCTION
	EXISTING INTERIOR 2 HOUR CONSTRUCTION

DEMOLITION KEYNOTE LEGEND

KEYNOTE #	DESCRIPTION
SLABS & FLOOR FINISHES	
A02	REMOVE EXISTING CARPET AND RUBBER BASE COMPLETE. PREPARE FLOOR TO RECEIVE NEW FINISHES AS SPECIFIED.
A03	REMOVE EXISTING VCT AND RUBBER BASE COMPLETE. PREPARE FLOOR TO RECEIVE NEW FINISHES AS SPECIFIED.
WALLS & WALL FINISHES	
B01	REMOVE WALL COMPLETELY. CAP ANY UTILITIES AS REQUIRED - SEE PLUMBING AND ELECTRICAL DRAWINGS FOR MORE INFORMATION. PREPARE ADJACENT WALL AND FLOOR SURFACES TO RECEIVE NEW FINISHES AS SPECIFIED.
B07	PREPARE WALL TO RECIEVE NEW FINISHES. SEE FINISH LEGEND AND SCHEDULES.
DOORS & FRAMES	
D01	REMOVE DOOR AND HOLLOW FRAME COMPLETELY PREPARE ADJACENT SURFACES TO RECEIVE FINISHES AS SPECIFIED AND INFILL OPENING TO MATCH ADJACENT SURFACES.
EQUIPMENT, CASEWORK & FURNITURE	
F16	PROTECT EXISTING WALL MOUNTED DEVICES TO REMAIN (INTERCOM, CLOCK, ETC.) REMOVE PROTECTION AND CLEAN UPON COMPLETION. ENSURE ITEM OPERATES AS REQUIRED.

GENERAL DEMOLITION NOTES

A. CONTRACTOR SHALL IMMEDIATELY NOTIFY THE ARCHITECT OF ANY DISCREPANCIES WITHIN THE CONSTRUCTION DOCUMENTS OR ANY FIELD CONDITIONS WHICH DIFFER FROM THOSE DESCRIBED WITHIN THE DOCUMENTS.
B. ALL REQUIRED DEMOLITION IS INCLUDED IN THE GENERAL CONTRACT. DEMOLITION CONSISTS OF THE REMOVAL OF ANY EXISTING ELEMENT WHICH INTERFERES WITH THE COMPLETION OF NEW CONSTRUCTION OR TEMPORARY EGRESS MEASURES.
C. DEBRIS RESULTING FROM DEMOLITION SHALL BE REMOVED FROM THE CONSTRUCTION SITE ON A DAILY BASIS.
D. ALL SURFACES DISTURBED BY DEMOLITION, CUTTING OR PATCHING SHALL BE LEFT WITH A "CLEAN CUT" TO FACILITATE THE MATCHING OF EXISTING SURFACES WITH ADJACENT NEW CONSTRUCTION.
E. ANY DAMAGE TO EXISTING CONDITIONS CAUSED BY DEMOLITION AND/OR NEW WORK SHALL BE REPAIRED AS DETAILED, BY THE CONTRACTOR RESPONSIBLE FOR THE DAMAGE.
F. THE CONTRACTOR SHALL INSTALL TEMPORARY BARRIERS AS REQUIRED TO PREVENT THE SPREAD OF DUST AND FUMES TO AREAS NOT INCLUDED IN THE WORK.
G. THE CONTRACTOR SHALL MAINTAIN EMERGENCY EGRESS OF OCCUPANTS OF ADJACENT BUILDINGS AND TENANTS AT ALL TIMES.
H. THE CONTRACTOR SHALL COORDINATE WITH THE OWNER AND OBTAIN APPROVALS FOR ANY ACTIVITIES WHICH INVOLVE ANY UTILITY INTERRUPTIONS OR EXCESSIVE NOISE.
I. THE CONTRACTOR SHALL PROTECT ADJACENT EXISTING ROOF SURFACES FROM DAMAGE BY DEMOLITION AND CONSTRUCTION ACTIVITIES. ANY REPAIR ANY DAMAGE THAT OCCURS.
J. DO NOT STORE ANY MATERIALS ON ADJACENT ROOFS, AND LIMIT FOOT TRAFFIC TO THE EXTENT POSSIBLE.
K. DIMENSIONS SHOWN ON EXISTING PLANS ARE SHOWN AS A REFERENCE AND SHALL BE CONSIDERED +/- 8" EXACT DIMENSIONS ARE REQUIRED. FIELD MEASUREMENTS SHALL BE TAKEN BY THE CONTRACTOR.
L. ANY DUCT WORK SHOWN PASSING THROUGH A NEW OR EXISTING WALL CARRYING A FIRE RATING SHALL BE EQUIPPED WITH APPROPRIATE FIRE RATED DAMPERS AT THE POINT OF INTERSECTION WITH THE WALL.
M. ANY NEW OR EXISTING PIPING CONDUIT OR WIRING PASSING THROUGH A NEW OR EXISTING WALL CARRYING A FIRE RATING SHALL BE SEALED TIGHT TO THE WALL WITH A UL APPROVED METHOD.
N. ALL PEELING PAINT SHALL BE SCRAPED FROM EXISTING WALLS AND WALLS SHALL BE CLEANED PRIOR TO REPAINTING.
O. WHEN EXISTING PAINTED SURFACES ARE PATCHED IN VISIBLE AREAS, THE ENTIRE SURFACE OR WALL SHALL BE PAINTED TO ACHIEVE A UNIFORM APPEARANCE.
P. ALL HOLES IN MASONRY WALLS, EXISTING OR MADE BY THE REMOVAL OF ANY FIXTURES OR EQUIPMENT, SHALL BE PATCHED WITH MASONRY TO MATCH EXISTING. INSTALL NEW MASONRY FLUSH WITH EXISTING ON BOTH SIDES.
Q. REMOVE ALL WALL BRACKETS, PLASTIC SHIELDS, HOOKS, CLIPS, NAILS, TAPE AND SCREWS ON EXISTING WALLS IN PREPARATION FOR SMOOTH CLEAN SURFACE (TYPICAL AT SPACES WHERE NEW FINISH IS SCHEDULED).
R. ALL DEMOLITION SHALL BE PERFORMED TO PREVENT THE ARBITRARY DESTRUCTION OR INTERRUPTION OF CONCEALED UTILITIES WHICH ARE INTENDED TO REMAIN IN USE AND THE ROUTING OF WHICH CAN NOT BE PRE-DETERMINED UNTIL DEMOLITION IS STARTED. ALL SUCH DISCOVERIES OF UTILITIES WHICH ARE IN A DIFFERENT LOCATION FROM THAT INDICATED, CHANGE DIRECTION FROM FLOOR-TO-FLOOR, ETC. OR ARE UNIDENTIFIED, SHALL BE REPORTED TO THE ARCHITECT BEFORE REMOVAL OR DISTURBANCE.
S. REMOVE ALL WALL MOUNTED ACCESSORIES IN AREAS OF DEMOLITION AND RENOVATION. PATCH/REPAIR WALLS TO MAKE SMOOTH AND PREPARE FOR NEW WALL FINISH. REINSTALL ANY REUSED/RELOCATED WALL ACCESSORIES PER MANUFACTURER'S INSTRUCTIONS.
T. SEE MECHANICAL AND ELECTRICAL DRAWINGS FOR MORE INFORMATION ON DEMOLITION AND CONSTRUCTION TO REMAIN.
U. AT AREAS WHERE NEW SYSTEMS ARE INSTALLED ABOVE EXISTING ACOUSTICAL LAY-IN CEILINGS, REMOVE THE CEILING TILES AND STORE IN A LOCATION AS DIRECTED BY THE OWNER. REINSTALL THE TILE UPON COMPLETION OF THE SYSTEMS WORK. PROTECT TILES FROM DAMAGE, DIRT OR STAINING. REPLACE ANY TILE WHICH DOES GET DAMAGED, DIRTY OR STAINED WITH NEW TILES MATCHING THE TYPE OF THE ADJACENT EXISTING TILES.
V. REFER TO SPECIFICATIONS FOR ADDITIONAL REQUIREMENTS. WHERE GENERAL DEMOLITION NOTES DO NOT AGREE WITH SPECIFICATIONS, REFER DISCREPANCY TO ARCHITECT FOR RESOLUTION.
W. EXISTING ELEVATIONS AND LOCATIONS TO BE JOINED SHALL BE VERIFIED BY THE CONTRACTOR BEFORE CONSTRUCTION. SHOULD THEY DIFFER FROM THOSE SHOWN ON THE DRAWINGS, THE CONTRACTOR SHALL NOTIFY THE ARCHITECT SO THAT MODIFICATIONS CAN BE MADE BEFORE PROCEEDING WITH THE WORK.

TRUE NORTH
PROJECT NORTH

ssoe®
S&W

PROFESSIONAL SEALS:

SOUTH CAROLINA
SSOE, INC
No. 746
CERTIFICATE OF AUTHORIZATION

STATE OF SOUTH CAROLINA
WILLIAM J. FLEMING
Columbia, SC
No. 3402
REGISTERED ARCHITECT
8-6-2021

SUBMITTAL/REVISION SCHEDULE:

NO.	DATE	DESCRIPTION
	8.06.2021	CONSTRUCTION DOCUMENTS

■ APPROVED FOR CONSTRUCTION
□ NOT APPROVED FOR CONSTRUCTION

CLIENT INFORMATION:

SOUTH CAROLINA EDUCATION LOTTERY

South Carolina Education Lottery®

CLIENT PROJECT #:	20048.00
SCEL PROJECT #:	Y20-N001-CB

PROJECT INFORMATION:

4TH FLOOR UPFIT

1333 MAIN STREET, COLUMBIA, SOUTH CAROLINA

SSOE/SW PROJECT #:	021-00531-00
SSOE/SW MANAGER:	BILL FLEMING

SSOE | STEVENS & WILKINSON
1501 Main Street, Suite 730
Columbia, SC 29201
T. (803) 765-0320

THIS DRAWING IS THE PROPERTY OF SSOE | STEVENS & WILKINSON. UNAUTHORIZED USE OF ANY KIND, INCLUDING USE ON OTHER PROJECTS, IS PROHIBITED.
© SSOE, INC. 2021

LEVEL 4 DEMOLITION PLAN

AD1.41

C:\Autodesk\Revit\2004800 - Arch - SC Education Lottery Upfit - Adjusted Scope - V19.2_lbajarias@ssoe.com.rvt :FILE PATH
10/20/2021 3:08:42 PM :PRINT DATE

1 LEVEL 4 DEMOLITION RCP
1/4" = 1'-0"

DEMOLITION LEGEND

B01	KEYNOTE - SEE KEYNOTE LEGEND
	AREA OF "NO WORK"
	AREA OF DEMOLITION AS DESCRIBED
	CONSTRUCTION TO BE DEMOLISHED (PLAN) [SEE KEYNOTES FOR MORE DETAIL]
	EXISTING EXTERIOR CONSTRUCTION (PLAN)
	EXISTING INTERIOR NON-RATED CONSTRUCTION
	EXISTING INTERIOR 1 HOUR CONSTRUCTION
	EXISTING INTERIOR 2 HOUR CONSTRUCTION

DEMOLITION KEYNOTE LEGEND

KEYNOTE #	DESCRIPTION
CEILINGS & CEILING MOUNTED EQUIPMENT	
E01	REMOVE EXISTING GYPSUM BOARD CEILING COMPLETE INCLUDING ALL LIGHTS AND DIFFUSERS. PROTECT ANY SPRAY FIRE PROOFING ENCOUNTERED. PREPARE ADJACENT SURFACES TO REMAIN TO RECEIVE NEW FINISHES AS SPECIFIED. SEE MECHANICAL AND ELECTRICAL DRAWINGS FOR MORE INFORMATION.
CEILINGS & CEILING MOUNTED EQUIPMENT	
E02	REMOVE EXISTING ACOUSTICAL CEILING AND GRID SYSTEM COMPLETE, INCLUDING ALL LIGHTS AND DIFFUSERS. PROTECT ANY SPRAY FIRE PROOFING ENCOUNTERED. PREPARE ADJACENT SURFACES TO REMAIN TO RECEIVE NEW FINISHES AS SPECIFIED. SEE MECHANICAL AND ELECTRICAL DRAWINGS FOR MORE INFORMATION.
CEILINGS & CEILING MOUNTED EQUIPMENT	
E03	REMOVE EXISTING LIGHT FIXTURES COMPLETELY. SEE ELECTRICAL DRAWINGS FOR MORE INFORMATION.

GENERAL DEMOLITION NOTES

A. CONTRACTOR SHALL IMMEDIATELY NOTIFY THE ARCHITECT OF ANY DISCREPANCIES WITHIN THE CONSTRUCTION DOCUMENTS OR ANY FIELD CONDITIONS WHICH DIFFER FROM THOSE DESCRIBED WITHIN THE DOCUMENTS.
B. ALL REQUIRED DEMOLITION IS INCLUDED IN THE GENERAL CONTRACT. DEMOLITION CONSISTS OF THE REMOVAL OF ANY EXISTING ELEMENT WHICH INTERFERES WITH THE COMPLETION OF NEW CONSTRUCTION OR TEMPORARY EGRESS MEASURES.
C. DEBRIS RESULTING FROM DEMOLITION SHALL BE REMOVED FROM THE CONSTRUCTION SITE ON A DAILY BASIS.
D. ALL SURFACES DISTURBED BY DEMOLITION, CUTTING OR PATCHING SHALL BE LEFT WITH A "CLEAN CUT" TO FACILITATE THE MATCHING OF EXISTING SURFACES WITH ADJACENT NEW CONSTRUCTION.
E. ANY DAMAGE TO EXISTING CONDITIONS CAUSED BY DEMOLITION AND/OR NEW WORK SHALL BE REPAIRED AS DETAILED, BY THE CONTRACTOR RESPONSIBLE FOR THE DAMAGE.
F. THE CONTRACTOR SHALL INSTALL TEMPORARY BARRIERS AS REQUIRED TO PREVENT THE SPREAD OF DUST AND FUMES TO AREAS NOT INCLUDED IN THE WORK.
G. THE CONTRACTOR SHALL MAINTAIN EMERGENCY EGRESS OF OCCUPANTS OF ADJACENT BUILDINGS AND TENANTS AT ALL TIMES.
H. THE CONTRACTOR SHALL COORDINATE WITH THE OWNER AND OBTAIN APPROVALS FOR ANY ACTIVITIES WHICH INVOLVE ANY UTILITY INTERRUPTIONS OR EXCESSIVE NOISE.
I. THE CONTRACTOR SHALL PROTECT ADJACENT EXISTING ROOF SURFACES FROM DAMAGE BY DEMOLITION AND CONSTRUCTION ACTIVITIES. ANY REPAIR ANY DAMAGE THAT OCCURS.
J. DO NOT STORE ANY MATERIALS ON ADJACENT ROOFS, AND LIMIT FOOT TRAFFIC TO THE EXTENT POSSIBLE.
K. DIMENSIONS SHOWN ON EXISTING PLANS ARE SHOWN AS A REFERENCE AND SHALL BE CONSIDERED +/- 8" EXACT DIMENSIONS ARE REQUIRED. FIELD MEASUREMENTS SHALL BE TAKEN BY THE CONTRACTOR.
L. ANY DUCT WORK SHOWN PASSING THROUGH A NEW OR EXISTING WALL CARRYING A FIRE RATING SHALL BE EQUIPPED WITH APPROPRIATE FIRE RATED DAMPERS AT THE POINT OF INTERSECTION WITH THE WALL.
M. ANY NEW OR EXISTING PIPING CONDUIT OR WIRING PASSING THROUGH A NEW OR EXISTING WALL CARRYING A FIRE RATING SHALL BE SEALED TIGHT TO THE WALL WITH A UL APPROVED METHOD.
N. ALL PEELING PAINT SHALL BE SCRAPED FROM EXISTING WALLS AND WALLS SHALL BE CLEANED PRIOR TO REPAINTING.
O. WHEN EXISTING PAINTED SURFACES ARE PATCHED IN VISIBLE AREAS, THE ENTIRE SURFACE OR WALL SHALL BE PAINTED TO ACHIEVE A UNIFORM APPEARANCE.
P. ALL HOLES IN MASONRY WALLS, EXISTING OR MADE BY THE REMOVAL OF ANY FIXTURES OR EQUIPMENT, SHALL BE PATCHED WITH MASONRY TO MATCH EXISTING. INSTALL NEW MASONRY FLUSH WITH EXISTING ON BOTH SIDES.
Q. REMOVE ALL WALL BRACKETS, PLASTIC SHIELDS, HOOKS, CLIPS, NAILS, TAPE AND SCREWS ON EXISTING WALLS IN PREPARATION FOR SMOOTH CLEAN SURFACE (TYPICAL AT SPACES WHERE NEW FINISH IS SCHEDULED).
R. ALL DEMOLITION SHALL BE PERFORMED TO PREVENT THE ARBITRARY DESTRUCTION OR INTERRUPTION OF CONCEALED UTILITIES WHICH ARE INTENDED TO REMAIN IN USE AND THE ROUTING OF WHICH CAN NOT BE PRE-DETERMINED UNTIL DEMOLITION IS STARTED. ALL SUCH DISCOVERIES OF UTILITIES WHICH ARE IN A DIFFERENT LOCATION FROM THAT INDICATED, CHANGE DIRECTION FROM FLOOR-TO-FLOOR, ETC. OR ARE UNIDENTIFIED, SHALL BE REPORTED TO THE ARCHITECT BEFORE REMOVAL OR DISTURBANCE.
S. REMOVE ALL WALL MOUNTED ACCESSORIES IN AREAS OF DEMOLITION AND RENOVATION. PATCH/REPAIR WALLS TO MAKE SMOOTH AND PREPARE FOR NEW WALL FINISH. REINSTALL ANY REUSED/RELOCATED WALL ACCESSORIES PER MANUFACTURER'S INSTRUCTIONS.
T. SEE MECHANICAL AND ELECTRICAL DRAWINGS FOR MORE INFORMATION ON DEMOLITION AND CONSTRUCTION TO REMAIN.
U. AT AREAS WHERE NEW SYSTEMS ARE INSTALLED ABOVE EXISTING ACOUSTICAL LAY-IN CEILINGS, REMOVE THE CEILING TILES AND STORE IN A LOCATION AS DIRECTED BY THE OWNER. REINSTALL THE TILE UPON COMPLETION OF THE SYSTEMS WORK. PROTECT TILES FROM DAMAGE, DIRT OR STAINING. REPLACE ANY TILE WHICH DOES GET DAMAGED, DIRTY OR STAINED WITH NEW TILES MATCHING THE TYPE OF THE ADJACENT EXISTING TILES.
V. REFER TO SPECIFICATIONS FOR ADDITIONAL REQUIREMENTS. WHERE GENERAL DEMOLITION NOTES DO NOT AGREE WITH SPECIFICATIONS, REFER DISCREPANCY TO ARCHITECT FOR RESOLUTION.
W. EXISTING ELEVATIONS AND LOCATIONS TO BE JOINED SHALL BE VERIFIED BY THE CONTRACTOR BEFORE CONSTRUCTION. SHOULD THEY DIFFER FROM THOSE SHOWN ON THE DRAWINGS, THE CONTRACTOR SHALL NOTIFY THE ARCHITECT SO THAT MODIFICATIONS CAN BE MADE BEFORE PROCEEDING WITH THE WORK.

ssoe®
S&W

PROFESSIONAL SEALS:

SOUTH CAROLINA CERTIFICATE OF AUTHORIZATION SSOE, INC No. 746

STATE OF SOUTH CAROLINA WILLIAM J. FLEMING Columbia SC No. 3452 REGISTERED ARCHITECT
8-6-2021

SUBMITTAL/REVISION SCHEDULE:

NO.	DATE	DESCRIPTION
	8.06.2021	CONSTRUCTION DOCUMENTS

■ APPROVED FOR CONSTRUCTION
□ NOT APPROVED FOR CONSTRUCTION

CLIENT INFORMATION:

SOUTH CAROLINA EDUCATION LOTTERY

South Carolina Education Lottery®

CLIENT PROJECT #:	20048.00
SCEL PROJECT #:	Y20-N001-CB

PROJECT INFORMATION:

4TH FLOOR UPFIT

1333 MAIN STREET, COLUMBIA, SOUTH CAROLINA

SSOE/SW PROJECT #:	021-00531-00
SSOE/SW MANAGER:	BILL FLEMING

SSOE | STEVENS & WILKINSON
1501 Main Street, Suite 730
Columbia, SC 29201
T. (803) 765-0320

THIS DRAWING IS THE PROPERTY OF SSOE | STEVENS & WILKINSON. UNAUTHORIZED USE OF ANY KIND, INCLUDING USE ON OTHER PROJECTS, IS PROHIBITED.
© SSOE, INC. 2021

LEVEL 4 DEMOLITION REFLECTED CEILING PLAN

AD6.41

C:\Autodesk\Revit\2004800 - Arch - SC Education Lottery Upfit - Adjusted Scope - V19.2_lbajarias@ssoe.com.rvt :FILE PATH
10/20/2021 3:08:44 PM :PRINT DATE

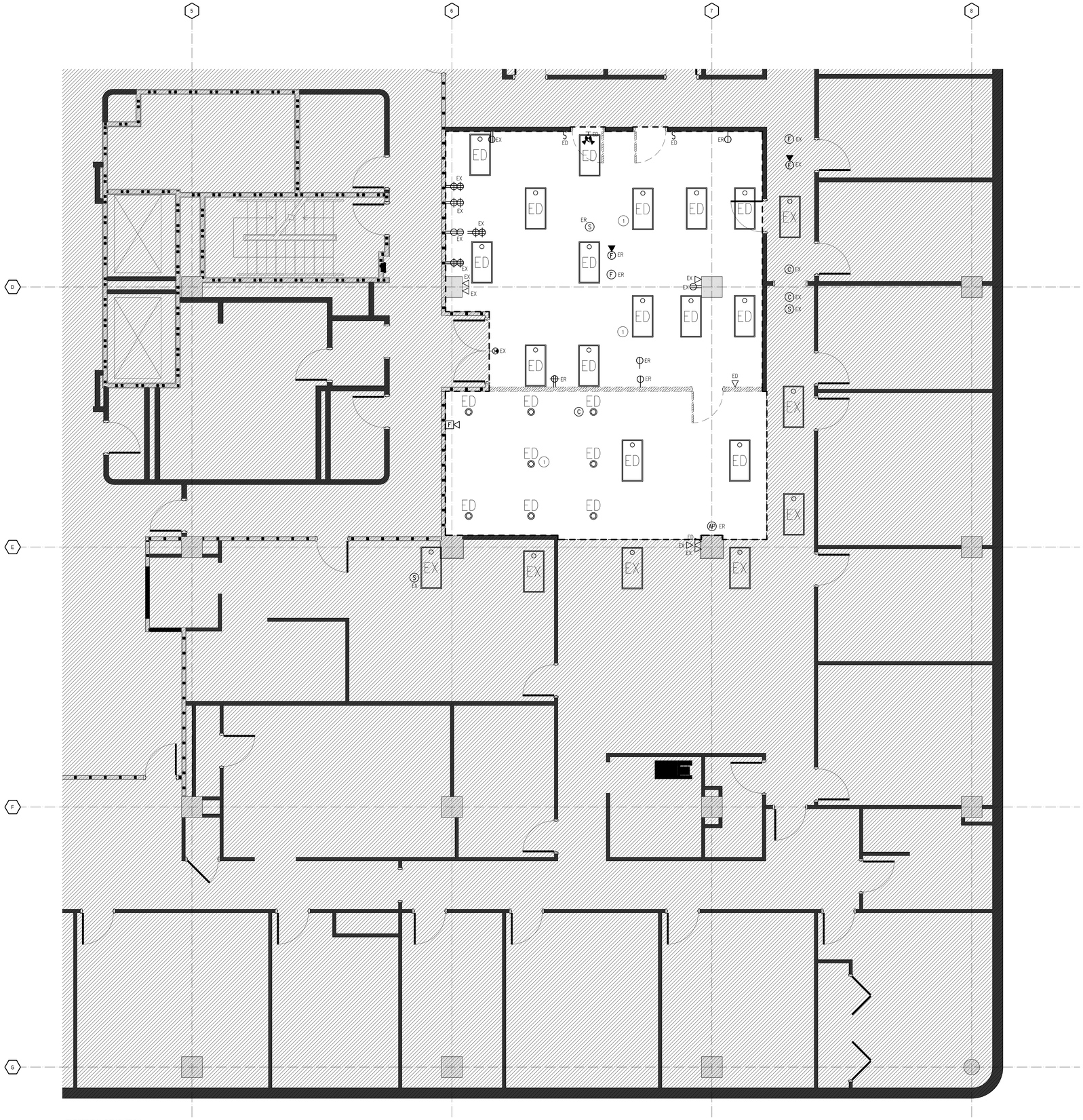

1 ELECTRICAL DEMOLITION
LEVEL 4 FLOOR PLAN
1/4" = 1'-0"

DEMOLITION GENERAL NOTES

A. THE PURPOSE AND INTENT OF ALL DEMOLITION SHEETS IS TO SHOW THE ELECTRICAL CONTRACTOR, DEVICES REQUIRED TO BE REMOVED OR TO REMAIN FOR SUCCESSFUL COMPLETION OF THE DEMOLITION REQUIREMENTS, BUT IS IN NO WAY LIMITED TO THE DEVICES SHOWN. ALL BIDDERS ARE REQUIRED TO MAKE AN ON-SITE VISIT AND INSPECT EXISTING PANELS, DEVICES, ABOVE CEILING INSPECTIONS AND CIRCUIT REQUIREMENTS BEFORE FINAL BID DATE. COORDINATE ANY POWER DOWN TIMES. ANY ADDITIONAL WORK REQUIRED OR CLARIFICATIONS TO THE WORK SHOWN THAT COULD HAVE BEEN REASONABLY VERIFIED BY THE SURVEY SHALL BE THE RESPONSIBILITY OF THE CONTRACTOR.

B. MECHANICALLY AND ELECTRICALLY SECURE ALL ELECTRICAL CONDUIT AND CONDUCTORS WHICH ARE ABANDONED. ABANDONED WIRING SHALL BE REMOVED BACK TO THE OVERCURRENT DEVICE WHICH PROTECTS IT. ABANDONED CONDUIT SHALL BE REMOVED BACK TO THE POINT OF CONCEALMENT. EXISTING ELECTRICAL OUTLETS NOT SHOWN AS BEING ABANDONED OR REMOVED SHALL BE RECONNECTED AS REQUIRED. ALL ELECTRICAL DEVICES TO REMAIN SHALL BE INSPECTED, CLEANED AND REPAIRED OR REPLACED AS NECESSARY.

C. REROUTE AND EXTEND CIRCUITS TO EXISTING DEVICES, AS REQUIRED TO MAINTAIN CONTINUITY OF POWER AND GROUNDING. RECONNECT CIRCUITS TO LOADS IN OTHER AREAS OF THE BUILDING OR SITE WHICH ARE AFFECTED BY DEMOLITION WORK.

D. PERFORM ALL CUTTING AND DRILLING REQUIRED. PATCH ALL HOLES, PAINT AND OTHERWISE REPAIR ALL DAMAGES TO THE BUILDING STRUCTURE AND SURFACES WHICH OCCUR AS A RESULT OF THIS PROJECT. REPAIRS SHALL RESTORE THE STRUCTURE TO THE SAME CONDITION EXISTING PRIOR TO BEGINNING WORK.

E. ANY DAMAGE TO EXISTING CONDITIONS CAUSED BY DEMOLITION AND/OR NEW WORK SHALL BE REPAIRED AS DETAILED, BY THE CONTRACTOR RESPONSIBLE FOR THE DAMAGE.

F. ANY NEW OR EXISTING PIPING, PASSING THROUGH A NEW OR EXISTING WALL CARRYING A FIRE RATING SHALL BE SEALED TIGHT TO THE WALL WITH A UL APPROVED METHOD. ALL DEMOLITION SHALL BE PERFORMED TO PREVENT THE ARBITRARY DESTRUCTION OR INTERRUPTION OF CONCEALED UTILITIES WHICH ARE INTENDED TO REMAIN IN USE AND THE ROUTING OF WHICH CAN NOT BE PREDETERMINED UNTIL DEMOLITION IS STARTED. ALL SUCH DISCOVERIES OF UTILITIES WHICH ARE IN A DIFFERENT LOCATION FROM THAT INDICATED, CHANGE DIRECTION FROM FLOOR-TO-FLOOR, ETC. OR ARE UNIDENTIFIED, SHALL BE REPORTED TO THE ARCHITECT BEFORE REMOVAL OR DISTURBANCE.

G. DISCONNECT, DEMOLISH, AND REMOVE WORK INDICATED OR SPECIFIED.

H. WHERE CONDUIT, WIRE, OR ELECTRICAL DEVICES TO REMAIN ARE DAMAGED OR DISTURBED, REMOVE DAMAGED PORTIONS AND INSTALL NEW PRODUCTS OF EQUAL CAPACITY AND QUALITY.

I. REMOVE, STORE, CLEAN, REINSTALL, RECONNECT, AND MAKE OPERATIONAL EQUIPMENT INDICATED FOR RELOCATION.

DEMOLITION PLAN LEGEND

- AREA NOT INCLUDED IN PROJECT SCOPE.
- EXISTING CONSTRUCTION TO BE REMOVED
- EXISTING CONSTRUCTION TO REMAIN

DEMOLITION PLAN KEY NOTES:

1. EXISTING LIGHTING FIXTURES TO BE DEMOED AS INDICATED AND RETURNED TO THE OWNER. EXISTING NORMAL AND EMERGENCY LIGHTING CIRCUITS TO BE REUSED FOR NEW RENOVATION. MAINTAIN INTEGRITY OF EXISTING LIGHTING CIRCUITS TO REMAIN. TYPICAL FOR LIGHT FIXTURES WITH THE SUBSCRIPT "ED".
2. EXISTING LIGHTING FIXTURES TO BE RELOCATED AS INDICATED. SEE RENOVATION LIGHTING PLAN FOR NEW LOCATION. EXISTING LIGHTING CIRCUIT TO BE EXTENDED TO NEW LOCATION AS REQUIRED, 0.75"C., 2#12, #12 GND. TYPICAL FOR LIGHT FIXTURES WITH SUBSCRIPT "ER".
3. EXISTING LIGHTING FIXTURES TO REMAIN. TYPICAL FOR LIGHT FIXTURES WITH SUBSCRIPT "EX".
4. EXISTING POWER RECEPTACLES TO BE DEMOED AS INDICATED. EXISTING RECEPTACLE CIRCUIT TO REMAIN AND BE REUSED FOR NEW RENOVATION. MAINTAIN INTEGRITY OF EXISTING RECEPTACLE CIRCUITS TO REMAIN. TYPICAL FOR RECEPTACLES WITH SUBSCRIPT "ED".
5. EXISTING POWER RECEPTACLES TO BE RELOCATED AS INDICATED. SEE RENOVATION POWER AND COMMUNICATIONS PLAN FOR NEW LOCATION. EXISTING RECEPTACLE CIRCUIT TO BE EXTENDED TO NEW LOCATION AS REQUIRED, 0.75"C., 2#12, #12 GND. TYPICAL FOR RECEPTACLES WITH SUBSCRIPT "ER".
6. EXISTING POWER RECEPTACLES TO REMAIN. TYPICAL FOR RECEPTACLES WITH SUBSCRIPT "EX".
7. EXISTING CEILING TO BE REMOVED AND REPLACED WITH NEW CEILING FOR RENOVATION. ALL EXISTING CEILING MOUNTED DEVICES (FIRE ALARM SYSTEM DEVICES, PAGING SYSTEM SPEAKERS, SECURITY ALARM CAMERAS, ETC.) TO BE PROTECTED IN PLACE FOR REINSTALLATION IN NEW CEILING. EXTEND SYSTEM CIRCUITS TO NEW LOCATION AS REQUIRED. TYPICAL FOR DEVICES WITH SUBSCRIPT "EX".

ssoe®

S&W

PROFESSIONAL SEALS:

SOUTH CAROLINA SSOE, INC No. 746 CERTIFICATE OF AUTHORIZATION

SOUTH CAROLINA PROFESSIONAL ENGINEER No. 16536 BRIAN K. BRAHIM 8/06/21

SUBMITTAL/REVISION SCHEDULE:

NO.	DATE	DESCRIPTION
	8.06.2021	CONSTRUCTION DOCUMENTS

■ APPROVED FOR CONSTRUCTION
□ NOT APPROVED FOR CONSTRUCTION

CLIENT INFORMATION:

SOUTH CAROLINA EDUCATION LOTTERY

South Carolina Education Lottery®

CLIENT PROJECT #:	20048.00
JHA PROJECT #:	Y20-N001-C8

PROJECT INFORMATION:

4TH FLOOR UPFIT

1333 MAIN STREET, COLUMBIA, SOUTH CAROLINA

SSOE/SW PROJECT #:	021-00531-00
SSOE/SW MANAGER:	BILL FLEMING

SSOE | STEVENS & WILKINSON
1501 Main Street, Suite 730
Columbia, SC 29201
T. (803) 765-0320

THIS DRAWING IS THE PROPERTY OF SSOE | STEVENS & WILKINSON. UNAUTHORIZED USE OF ANY KIND, INCLUDING USE ON OTHER PROJECTS, IS PROHIBITED.

© SSOE, INC. 2021

ELECTRICAL DEMOLITION
LEVEL 4 FLOOR PLAN

ED1.41

A | B | C | D | E | F | G | H | J

GENERAL ELECTRICAL NOTES

1. DRAWINGS SHOWING ELECTRICAL WORK ARE DIAGRAMMATIC. REFER TO ARCHITECTURAL AND STRUCTURAL DRAWINGS FOR GUIDANCE AS TO DIMENSIONS, CEILING HEIGHTS, DOOR SWINGS AND FINISHES.
2. COORDINATE ELECTRICAL WORK WITH OTHER DISCIPLINES. REFER TO MECHANICAL AND PLUMBING DRAWINGS FOR LOCATIONS OF EQUIPMENT, PIPES AND DUCTWORK.
3. INSTALL THE ELECTRICAL SYSTEMS SO AS NOT TO INTERFERE WITH OTHER SYSTEMS. PROVIDE ADDITIONAL STEEL SUPPORTS FOR MOTOR CONTROLLERS, FIXTURES, RACEWAYS, CABINETS, BOXES, AND THE LIKE WHERE THE BUILDING, EQUIPMENT OR STRUCTURE IS NOT SUITABLE FOR MOUNTING SAME DIRECTLY THEREON.
4. "PROVIDE" USED IN THE SPECIFICATIONS AND DRAWINGS SHALL MEAN "TO FURNISH, INSTALL, CONNECT AND PLACE IN SERVICE COMPLETELY IN THE SPECIFIED OR APPROVED MANNER THE ITEM DESCRIBED."
5. ELECTRICAL WORK EMBEDDED IN CONCRETE OR OTHERWISE PERMANENTLY CONCEALED SHALL NOT BE COVERED UNTIL INSPECTED BY THE OWNER'S REPRESENTATIVE.
6. ALL PENETRATIONS THROUGH FIRE RESISTANT WALLS AND OTHER SUCH RATED ASSEMBLIES SHALL BE FIRESTOPPED TO MAINTAIN ITS RATING.
7. GROUNDING EQUIPMENT CONDUCTORS SHALL BE PROVIDED FOR ALL BRANCH CIRCUITS AND FEEDERS.
8. PROVIDE EXPANSION JOINT FITTINGS ON ALL CONDUITS THAT CROSS EXPANSION JOINTS OR CONDUITS THAT PENETRATE WALLS WITH SEISMIC BRACING. SEE ARCHITECTURAL DRAWINGS.
9. COORDINATE WITH ARCHITECT AND OWNER'S CRITERIA OUTLET DEVICE COVERPLATE MATERIAL AND FINISH AND DEVICE COLOR FOR THE APPLIED VOLTAGE AND SYSTEM.
10. PROVIDE POWER, CONNECTIONS AND DISCONNECTING MEANS TO ALL HVAC AND PLUMBING EQUIPMENT WHETHER IT IS INDICATED ON THE DIVISION 26 DOCUMENTS OR NOT. THIS SHALL INCLUDE BUT IS NOT LIMITED TO, DUCT DETECTORS, SMOKE AND FIRE/SMOKE DAMPERS, AUTOMATIC FLUSH VALVES, AUTOMATIC SINK AND URINAL CUT OFF VALVES. COORDINATE REQUIREMENTS, QUANTITIES AND LOCATIONS WITH DIVISIONS 22 & 23 FOR A COMPLETE INSTALLATION. IF QUANTITIES SHOWN ON DIVISION 26 DOCUMENTS ARE DIFFERENT THAN THOSE SHOWN ON DIVISION 22 & 23 DOCUMENTS THEN DIVISION 22 & 23 DOCUMENTS SHALL GOVERN.
11. BRANCH CIRCUIT CONDUCTORS SHALL BE ADJUSTED TO COMPENSATE FOR VOLTAGE DROP PER VOLTAGE DROP TABLE.
12. REFER TO "TYPICAL MOUNTING AND ALIGNMENT CRITERIA" DETAIL FOR OUTLET DEVICE MOUNTING HEIGHT AND LOCATIONS.
13. IN NEW WALLS, ALL WALL MOUNTED DEVICES SHALL BE FULLY RECESSED. IN EXISTING WALLS, SURFACE MOUNTED RACEWAY MAY BE USED FOR WALL MOUNTED DEVICES.
14. CONSTRUCTION WILL BE COMPLETED IN PHASES. SEE ARCHITECTURAL PHASING PLAN AND SPECIFICATIONS FOR REQUIREMENTS.

GENERAL ELECTRICAL DEMOLITION NOTES

1. DEMOLITION, AS SHOWN OR NOTED ON THE ARCHITECT'S PLANS IS BASED ON EXISTING DRAWINGS AND LIMITED FIELD INVESTIGATION. REFER TO ARCHITECT'S DEMOLITION PLANS FOR AREAS OF DEMOLITION.
2. THE CONTRACTOR SHALL REMOVE THE EXISTING ELECTRICAL WORK NECESSARY TO PROVIDE THE INTENDED ARRANGEMENT OF WALLS AND CELINGS, AND SHALL RECONNECT ALL CIRCUITS INTERRUPTED BY THIS DEMOLITION WHERE THOSE CIRCUITS ARE UTILIZED BEYOND THE DEMOLITION, WHETHER SUCH CIRCUITS ARE INDICATED OR NOT.
3. COORDINATE DEMOLITION WORK SHOWN ON THE ARCHITECT'S DRAWINGS. REFER TO THE ARCHITECTS AND MECHANICAL PLANS IF PRESENT FOR AREAS AND EQUIPMENT TO BE DEMOLISHED.
4. WHERE AN ELECTRICAL DEVICE THAT IS TO BE REMOVED IS AN "END OF LINE" OR A SINGLE DEVICE, THE CONDUCTORS SHALL BE DISCONNECTED AT THE NEXT UPSTREAM DEVICE TO REMAIN OR AT ITS RELATED PANELBOARD. ALL NON-FUNCTIONAL CONDUCTORS INCLUDING POWER AND TELECOMMUNICATION CABLES SHALL BE REMOVED.
5. DEMOLITION: ACCURACY OF ORIGINAL PLANS HAS NOT BEEN VERIFIED. THE CONTRACTORS SHALL MAINTAIN CIRCUIT CONTINUITY OF ALL EXISTING FIXTURES AND DEVICES THAT ARE TO REMAIN.
6. DISCONNECTED ITEMS THAT ARE TO REMAIN SHALL BE RECONNECTED TO THEIR RESPECTIVE PANELBOARDS AND SHALL BE TESTED FOR PROPER FUNCTIONALITY AT THE COMPLETION OF THE DEMOLITION WORK. REMOVE, STORE, CLEAN, REINSTALL, RECONNECT, AND MAKE OPERATIONAL EQUIPMENT INDICATED FOR RELOCATION.
7. EXISTING CIRCUITS, IF INDICATED, ARE DIAGRAMMATIC ONLY. VERIFY EXACT CONDUIT LOCATION AND ROUTING OF EXISTING CONDUIT RUNS AND NUMBER OF CONDUCTORS. AND PROVIDE ADDITIONAL CONDUITS / CONDUCTORS AS NECESSARY TO ACCOMPLISH THE DESIGN INTENT.
8. CIRCUIT BREAKERS ADDED TO THE EXISTING PANELBOARDS SHALL MATCH THE EXISTING BREAKER TYPE, MANUFACTURER AND AIC RATING. PROVIDE NEW TYPED, UPDATED DIRECTORIES IN THE EXISTING PANELBOARDS TO REFLECT CHANGES MADE BY THIS RENOVATION.
9. ALL ADDITIONS TO SYSTEMS SHALL MATCH THE MANUFACTURER'S EXISTING SYSTEMS PRESENTLY INSTALLED IN THE FACILITY UNLESS OTHERWISE NOTED.
10. EXISTING SYSTEMS SHALL REMAIN UNLESS NOTED FOR REMOVAL OR RELOCATION. ALL SYSTEMS SHALL BE CHECKED TO ENSURE THEY ARE IN PROPER WORKING ORDER BEFORE ANY DEMOLITION IS STARTED. SYSTEMS NOT FOUND TO BE IN SATISFACTORY WORKING CONDITION SHALL BE REPORTED TO THE OWNER IN WRITING PRIOR TO THE START OF ANY DEMOLITION ALL SYSTEMS SHALL BE CHECKED TO ENSURE THAT THEY ARE WORKING PROPERLY AFTER THE DEMOLITION WORK IS FINISHED AND AFTER THE NEW ELECTRICAL INSTALLATION IS COMPLETE.
11. PERFORM ALL CUTTING AND DRILLING REQUIRED. PATCH ALL HOLES, PAINT AND OTHERWISE REPAIR ALL DAMAGES TO THE BUILDING STRUCTURE AND SURFACES WHICH OCCUR AS A RESULT OF THIS PROJECT. REPAIRS SHALL RESTORE THE STRUCTURE TO THE SAME CONDITION EXISTING PRIOR TO BEGINNING WORK.
12. ANY DAMAGE TO EXISTING CONDITIONS CAUSED BY DEMOLITION AND/OR NEW WORK SHALL BE REPAIRED AS DETAILED BY THE CONTRACTOR RESPONSIBLE FOR THE DAMAGE.
13. THE PURPOSE AND INTENT OF ALL DEMOLITION SHEETS IS TO SHOW THE ELECTRICAL CONTRACTOR, DEVICES REQUIRED TO BE REMOVED OR TO REMAIN FOR SUCCESSFUL COMPLETION OF THE DEMOLITION REQUIREMENTS, BUT IS IN NO WAY LIMITED TO THE DEVICES ALL BIDDERS ARE REQUIRED TO MAKE AN ON-SITE VISIT AND INSPECT EXISTING PANELS, DEVICES, ABOVE CEILING INSPECTIONS AND CIRCUIT REQUIREMENTS BEFORE FINAL BID COORDINATE ANY POWER DOWN TIMES. ANY ADDITIONAL WORK REQUIRED OR CLARIFICATIONS TO THE WORK SHOWN THAT COULD HAVE BEEN REASONABLY VERIFIED BY THE SURVEY SHALL BE THE RESPONSIBILITY OF THE CONTRACTOR.

ELECTRICAL DEMOLITION LEGEND

ED	EXISTING CONDUIT AND WIRE TO BE DEMOLISHED.
EX	EXISTING CONDUIT AND WIRE TO REMAIN.
EA	EXISTING CONDUIT TO BE ABANDONED, WIRE TO BE REMOVED.
EX	EXISTING DEVICE TO REMAIN.
ENL	EXISTING DEVICE NEW LOCATION.
ER	EXISTING DEVICE TO BE RELOCATED.
EN	EXISTING DEVICE TO BE REPLACED WITH NEW DEVICE.
ED	EXISTING DEVICE TO BE DEMOLISHED.

NOTES:
1. ELECTRICAL DEVICES NOT SCHEDULED TO BE REMOVED, ABANDONED, OR RELOCATED SHALL REMAIN. CONTRACTOR SHALL FIELD VERIFY EXISTING CONDITIONS.

ELECTRICAL SYMBOL SCHEDULE

GLA-1,3,5	CIRCUIT HOMERUN TO PANELBOARD SHOWN LABELED WITH PANELBOARD DESIGNATION AND CIRCUIT NUMBER. UNLESS OTHERWISE NOTED, CONDUIT SHALL BE MINIMUM 3/4" WITH #12 WIRING FOR THE NUMBER OF CIRCUITS INDICATED. BOND THE EQUIPMENT GROUNDING CONDUCTOR TO EVERY PULL BOX AND TO EVERY JUNCTION BOX THROUGH WHICH IT PASSES.
— — — — — —	RACEWAY CONCEALED IN WALLS, CEILINGS, BELOW SLAB, CHASES OR OTHER BUILDING ELEMENTS.

RECEPTACLES SYMBOL SCHEDULE

	RECEPTACLE SUBSCRIPTS SUBSCRIPT "+72" DENOTES MOUNTING HEIGHT, (IE 72" AFF).
	DUPLEX RECEPTACLE, FLUSH MOUNTED. 18" AFF.
	DUPLEX RECEPTACLE, FLUSH MOUNTED 6" ABOVE COUNTERTOP BACKSPLASH OR 42" AFF IF NO COUNTER UNLESS OTHERWISE NOTED.
	GFCI DUPLEX RECEPTACLE, FLUSH MOUNTED. 18" AFF UNLESS OTHERWISE NOTED.
	EMERGENCY POWER DUPLEX RECEPTACLE, FLUSH MOUNTED. 18" AFF.
	GFCI DUPLEX RECEPTACLE, FLUSH MOUNTED 6" ABOVE COUNTERTOP BACKSPLASH OR 42" AFF IF NO COUNTER UNLESS OTHERWISE NOTED. SUBSCRIPT "DF" DENOTES DEADFRONT GFCI DEVICE (PASS & SEYMOOUR 2085 SERIES OR EQUAL)
	DOUBLE DUPLEX RECEPTACLE, FLUSH MOUNTED. 18" AFF.
	DOUBLE DUPLEX RECEPTACLE, FLUSH MOUNTED 6" ABOVE COUNTERTOP BACKSPLASH OR 42" AFF IF NO COUNTER UNLESS OTHERWISE NOTED.

COMMUNICATIONS SYMBOL SCHEDULE

◁	TELE-COMMUNICATIONS WALL OUTLET, FLUSH MOUNTED 18" AFF. PROVIDE 1-1/4"C FROM EACH OUTLET BOX STUBBED TO ACCESSIBLE CEILING SPACE UNLESS OTHERWISE NOTED. EACH OUTLET BOX SHALL BE 4"x4"x2-5/8" WITH 1GPR.
◁-	TELE-COMMUNICATIONS WALL OUTLET, FLUSH MOUNTED 6" ABOVE COUNTERTOP BACKSPLASH OR 42"AFF UNLESS OTHERWISE NOTED. PROVIDE 1-1/4"C FROM EACH OUTLET BOX STUBBED TO ACCESSIBLE CEILING SPACE UNLESS OTHERWISE NOTED. EACH OUTLET BOX SHALL BE 4"x4"x2-5/8" WITH 1GPR.
(AP)	TELE-COMMUNICATIONS WIRELESS ACCESS POINT, CEILING MOUNTED. EACH OUTLET BOX SHALL BE 4"x4"x2-5/8" WITH 1GPR.
(S)	PAGING SYSTEM SPEAKER FLUSH CEILING MOUNTED, FURNISHED BY OWNER. PROVIDE BACKBOX WITH 0.75"C. RUN TO NEAREST EXISTING PAGING SYSTEM SPEAKER.

LIGHT FIXTURE SYMBOL SCHEDULE

AA	LIGHTING FIXTURE. UPPERCASE LETTER INDICATES FIXTURE TYPE. SEE LIGHT FIXTURE SCHEDULE FOR DESCRIPTION. LOWERCASE LETTER INDICATES LIGHTING CONTROL ZONE. SUBSCRIPT NL DENOTES THE FIXTURE TO BE WIRED UNSWITCHED. HALF-SHADED FIXTURE INDICATES FIXTURE SHALL BE CONNECTED TO EMERGENCY LIFE SAFETY LIGHTING BRANCH CIRCUIT.
AA	WALL MOUNTED LIGHT FIXTURE. UPPERCASE LETTER INDICATES FIXTURE TYPE. SEE LIGHT FIXTURE SCHEDULE FOR DESCRIPTION. LOWERCASE LETTER INDICATES LIGHTING CONTROL ZONE. SUBSCRIPT NL DENOTES THE FIXTURE TO BE WIRED UNSWITCHED. HALF-SHADED FIXTURE INDICATES FIXTURE SHALL BE CONNECTED TO EMERGENCY LIFE SAFETY LIGHTING BRANCH CIRCUIT.

SWITCHES/LIGHTING CONTROLS SYMBOL SCHEDULE

S_b	TOGGLE SWITCH, SPST ["b" DENOTES FIXTURE CONTROLLED (TYPICAL FOR ALL SWITCHES AND DIMMERS)].
S_M	TOGGLE SWITCH SERVING SMALL MECHANICAL LOADS. COORDINATE VOLTAGE AND SWITCH TYPE WITH MECHANICAL LOAD SERVED.
S_{Da}	DIGITAL WALL DIMMER. HUBBELL NXSW-ORLO, WATTSTOPPER #LMDM SERIES. "a" DENOTES FIXTURE CONTROLLED. ROUTE 3/4"C. WITH WIRE PER MANUFACTURER TO ROOM CONTROLLER.
	DIGITAL OCCUPANCY/VACANCY SENSOR. CEILING MOUNTED. DUAL TECHNOLOGY SENSOR. CONNECT TO ROOM CONTROLLER. DUAL TECHNOLOGY HUBBELL NXOS-OMDT2, WATT STOPPER #LMDC-100

SECTION 26000 – ELECTRICAL SPECIFICATIONS

GENERAL:

THE ELECTRICAL CONTRACTOR SHALL PROVIDE ALL WORK, EQUIPMENT, SERVICES, LABOR, AND MATERIALS FOR THE INSTALLATION OF COMPLETE AND FUNCTIONAL ELECTRICAL SYSTEMS AS SPECIFIED, SHOWN, OR IMPLIED HEREIN AND ON THE ASSOCIATED DRAWINGS. THE DRAWINGS ARE DIAGRAMMATIC AND ARE NOT INTENDED TO INCLUDE EVERY DETAIL OF CONSTRUCTION, MATERIALS, AND EQUIPMENT. TAKE FINISH DIMENSIONS AT THE JOB SITE IN PREFERENCE TO SCALING DIMENSIONS.

REVIEW THE CONSTRUCTION DOCUMENTS OF ALL TRADES AND COORDINATE WORK WITH THE OTHER TRADES AS NECESSARY TO AVOID CONFLICTS AND INTERFERENCE. THE CONTRACTOR (HENCE FORTH MEANING THE ELECTRICAL CONTRACTOR) SHALL VISIT THE SITE OF PROPOSED CONSTRUCTION AND SHALL THOROUGHLY FAMILIARIZE HIMSELF WITH ALL EXISTING FIELD CONDITIONS AND VERIFY ALL ASPECTS OF THE PROPOSED WORK AS DESCRIBED OR IMPLIED BY THE CONTRACT DOCUMENTS. THE CONTRACTOR SHALL NOT BE COMPENSATED OR REIMBURSED FOR WORK NOT NECESSARILY SHOWN ON THE CONTRACT DOCUMENTS THAT COULD HAVE REASONABLY BEEN VERIFIED BY A SITE VISIT.

ALL WORK AND MATERIALS SHALL BE IN COMPLIANCE WITH APPLICABLE NATIONAL, STATE, AND LOCAL CODES. COMPLIANCE WITH THE LATEST EDITIONS OF THE NATIONAL ELECTRICAL CODE (NEC) AND OCCUPATIONAL SAFETY AND HEALTH ADMINISTRATION (OSHA) REQUIREMENTS SHALL SERVE AS THE ABSOLUTE MINIMUM STANDARDS. THE REGULATIONS OF THE LOCAL UTILITY SHALL GOVERN SERVICE CONNECTIONS AND METERING PROVISIONS. THE CONTRACTOR SHALL OBTAIN AND PAY FOR ANY AND ALL REQUIRED, PERMITS, INSPECTIONS, CERTIFICATES OF INSPECTIONS AND APPROVAL, AND THE LIKE, AND DELIVER SUCH CERTIFICATES TO THE ARCHITECT. THE ARCHITECT SHALL BE NOTIFIED OF ALL INSPECTION REQUESTS AT THE SAME TIME AS THE INSPECTION AUTHORITY.

LOCATIONS INDICATED FOR OUTLETS EQUIPMENT, ETC., ARE APPROXIMATE AND SHALL BE VERIFIED BY INSTRUCTION ON THE DRAWINGS OR CONSULTATION WITH THE OWNER. ALL ELECTRICAL EQUIPMENT SHALL BE INSTALLED SO THAT ALL CODE REQUIRED AND MANUFACTURED RECOMMENDED SERVICE CLEARANCES ARE MAINTAINED. THE CONTRACTOR SHALL BE RESPONSIBLE FOR ALL CUTTING AND PATCHING NECESSARY FOR THE PROPER INSTALLATION OF HIS WORK. HE SHALL BE RESPONSIBLE FOR ANY DAMAGE DONE BY HIMSELF OR HIS WORKMEN AND SHALL BE RESPONSIBLE FOR REPAIR OF SUCH DAMAGE.

ALL MATERIALS SHALL BE NEW AND SHALL BE LISTED AND LABELED BY THE UNDERWRITER'S LABORATORIES (UL), FOR THE USE INTENDED. PROVIDE NEMA 1 ENCLOSURES FOR ELECTRICAL APPARATUS INSTALLED IN INTERIOR LOCATIONS AND NEMA 3R OR WEATHERPROOF ENCLOSURES FOR ELECTRICAL APPARATUS INSTALLED IN EXTERIOR LOCATIONS OR LOCATIONS OTHERWISE SUBJECT TO WEATHER OR MOISTURE.

SHOP DRAWINGS AND CATALOG DATA SHALL BE SUBMITTED IN SIX COPIES. SUBMIT SHOP DRAWINGS AND CATALOG DATA FOR PANELBOARDS AND ALL SPECIAL SYSTEMS. SUBMIT BATTERY CALCULATIONS FOR ALL FIRE ALARM SYSTEM MODIFICATIONS. SUBMIT CATALOG DATA ONLY FOR DISCONNECT SWITCHES, STARTERS, LIGHT FIXTURES, WIRES AND CABLES, RACEWAYS, AND WIRING DEVICES. ALL APPROVALS FOR SUBSTITUTIONS MUST BE OBTAINED BY THE CONTRACTOR TEN CALENDAR DAYS PRIOR TO BID DATE.

A COMPLETE TEST OF ALL EQUIPMENT FURNISHED, INSTALLED, OR PROVIDED UNDER THIS CONTRACT SHALL BE PROVIDED BY THE CONTRACTOR. TESTING SHALL BE DONE IN ACCORDANCE WITH ALL LOCAL, STATE, AND NATIONAL CODES. THE CONTRACTOR SHALL WARRANT ALL MATERIALS, EQUIPMENT, AND WORKMANSHIP SHOWN OR IMPLIED BY THESE DOCUMENTS TO BE FREE OF DEFECTS FOR A PERIOD OF ONE YEAR FROM THE DATE OF FINAL ACCEPTANCE. IF WITHIN ONE YEAR OF THE DATE OF FINAL ACCEPTANCE ANY WORKMANSHIP, MATERIALS OR EQUIPMENT IS FOUND TO BE FAULTY OR DEFECTIVE THE CONTRACTOR SHALL CORRECT IT PROMPTLY AT NO COST TO THE OWNER. THE CONTRACTOR SHALL OBTAIN A SIGNED AND NOTARIZED INSPECTION CERTIFICATE OF HIS WORK FROM THE LOCAL BUILDING INSPECTOR AND PRESENT IT TO THE ARCHITECT BEFORE WORK WILL BE APPROVED FOR FINAL PAYMENT.

DEMOLITION:

THE DEMOLITION PLANS AND/OR REFERENCES ARE INTENDED TO SHOW THE GENERAL SCOPE OF WORK INVOLVED AND DOES NOT INCLUDE ALL DEVICES, LIGHT FIXTURES AND EQUIPMENT OR COMPLETE DETAILS OF THE WORK INVOLVED. THE CONTRACTOR, BASED ON HIS EXPERIENCE, SHALL INCLUDE IN THE ESTIMATE FOR THE WORK A REASONABLE AMOUNT OF RECONNECTION, REINSTALLATION, AND DEMOLITION WHICH MAY NOT BE REFLECTED BY THE PLANS OR IN THE SPECIFICATIONS.

MOST OF THE EXISTING DEVICES, LIGHT FIXTURES AND EQUIPMENT THAT HAVE BEEN IDENTIFIED FROM THE PROJECT'S AS-BUILT DRAWINGS AND/OR FROM THE A/E FIELD INVESTIGATION ARE SHOWN USING STANDARD SYMBOLS ON THE DEMOLITION PLAN. DISCONNECT AND REMOVE ALL EXISTING DEVICES, LIGHT FIXTURES AND EQUIPMENT SHOWN ON THE DEMOLITION PLAN AS REQUIRED UNLESS SPECIFICALLY NOTED OTHERWISE.

EQUIPMENT, FIXTURES OR DEVICES WHICH ARE TO REMAIN SHALL BE SHOWN DASHED ON THE RESPECTIVE POWER, LIGHTING OR OTHER APPLICABLE PLAN IN ADDITION TO THE DEMOLITION PLAN. SOME ITEMS WHICH ARE SHOWN TO BE REMOVED WILL BE RELOCATED AND REUSED. THOSE ITEMS WILL BE SHOWN DASHED ON THE RESPECTIVE POWER, LIGHTING OR OTHER APPLICABLE PLAN AND DESIGNATED AS RELOCATED.

MECHANICALLY AND ELECTRICALLY SECURE ALL ELECTRICAL CONDUIT AND CONDUCTORS WHICH ARE ABANDONED. ABANDONED WIRING SHALL BE REMOVED BACK TO THE OVER CURRENT DEVICE WHICH PROTECTS IT. ABANDONED CONDUIT SHALL BE REMOVED BACK TO THE POINT OF CONCEALMENT. EXISTING ELECTRICAL OUTLETS NOT SHOWN AS BEING ABANDONED OR REMOVED SHALL BE RECONNECTED AS REQUIRED. ALL ELECTRICAL DEVICES TO BE REMAIN SHALL INSPECTED, CLEANED AND REPAIRED OR REPLACED AS NECESSARY. MODIFY CIRCUITS TO EXISTING DEVICES, LIGHT FIXTURES AND EQUIPMENT SHOWN TO REMAIN IN ORDER TO MAINTAIN CONTINUITY OF POWER AND GROUNDING. RECONNECT CIRCUITS TO LOADS IN OTHER AREAS OF THE BUILDING OR SITE WHICH ARE AFFECTED BY DEMOLITION WORK.

PROVIDE NEW REVISED, TYPED PANELBOARD DIRECTORIES FOR EXISTING PANELBOARDS TO REFLECT NEW CIRCUIT CONDITIONS AS A RESULT OF CONSTRUCTION AND DEMOLITION. REPLACE ALL EXISTING DEVICES AND THE ASSOCIATED COVER PLATES WITH NEW DEVICES AND COVER PLATES TO MATCH THAT USED FOR RENOVATED AREAS AND NEW CONSTRUCTION. ALSO, WHERE NEW FINISHES ARE PLACED ON OR OVER EXISTING FINISHES EXTEND OUTLET BOXES TO ACCOMMODATE THE NEW FINISHES. EXISTING CONDUIT AND CONDUCTORS MANY BE REUSED WHERE THEY ARE OF THE TYPE SPECIFIED, MEET THE REQUIREMENTS OF NEW CIRCUITS, AND REMAIN IN GOOD CONDITION.

GROUNDING:

GROUNDING SHALL BE DONE IN ACCORDANCE WITH THE APPLICABLE SECTIONS OF THE NATIONAL ELECTRICAL CODE AND DETAILS SHOWN ON THE PLANS. GROUNDING FOR CIRCUITS SERVING LIGHTING, OUTLETS, OR EQUIPMENT IN PATIENT CARE AREAS SHALL COMPLY WITH NEC ARTICLE 517 AND SHALL INCLUDE A GREEN COPPER GROUNDING CONDUCTOR (#12 AWG MINIMUM) CONNECTED TO THE GROUNDING BAR IN THE SERVING PANELBOARD.

CONDUIT: CONDUIT SHALL BE REPUBLIC OR EQUAL.

CONDUIT SHALL BE MINIMUM 3/4-INCH SIZE AND ZINC-COATED ELECTRICAL METALLIC TUBING (EMT) EXCEPT IN WET, DAMP WASHDOWN AREAS (INCLUDING KITCHENS) WHERE GALVANIZED RIGID STEEL CONDUIT (GRS) OR INTERMEDIATE METAL CONDUIT (IMC) SHALL BE USED. EMT SHALL CONFORM TO UL 1242, NEC 342 AND ANSI C80.3; GRS SHALL BE SCHEDULE 40 STEEL WITH SURFACES PROTECTED BY METALLIC ZINC COATING AND SHALL CONFORM TO ANSI C80.1.

EMT FITTINGS SHALL BE GALVANIZED, STEEL COMPRESSION TYPE. EMT CONNECTORS SHALL HAVE INSULATED THROATS WHICH ARE AN INTEGRAL PART OF THE CONNECTOR. USE OF INSULATING SLEEVES IS NOT PERMITTED. GRS OR IMC CONDUIT ENTERING A BOX OR ENCLOSURE SHALL BE TERMINATED WITH A BUSHING. INSTALL BOND BUSHINGS WHERE REQUIRED BY THE NEC. FLEXIBLE CONDUIT CONNECTORS SHALL BE T&B NYLON INSULATED "TITE-BITE". INSTALL FLEXIBLE METAL CONDUIT FOR ALL FINAL CONNECTIONS TO MOTORS, TRANSFORMERS, AND TO OTHER EQUIPMENT, DEVICES AND APPLIANCES WHERE SUBJECT TO VIBRATION. USE LIQUID-TIGHT FLEXIBLE METAL CONDUIT IN KITCHENS, OUTDOORS AND ANY OTHER LOCATIONS SUBJECT TO MOISTURE.

SECURE CONDUITS WITH STRAPS AND CLAMPS MANUFACTURED FOR THE PURPOSE. TIE WIRE AND TIE WRAPS ARE NOT ALLOWED TO SUPPORT OR SECURE CONDUITS. ACCEPT IN AREAS SPECIFICALLY INDICATED ON THE PLANS CONDUIT SHALL BE RUN CONCEALED. CONDUITS SHALL BE RUN PARALLEL OR PERPENDICULAR TO STRUCTURAL ELEMENTS AND SHALL BE RUN IN GROUPS. WHERE RUN AT THE ROOF OR CEILING, GROUPINGS SHALL BE SINGLE DEPTH AND RUN TIGHT AGAINST THE STRUCTURE. FOR MULTIPLE DEPTH GROUPINGS AND OTHER SITUATIONS, A TRAPEZE ARRANGEMENT USING THREADED RODS OF SUFFICIENT SUPPORTING STRENGTH WILL PERMITTED. ALL CONDUITS SHALL BE KEPT A MINIMUM OF 6-INCHES AWAY FROM PARALLEL RUNS OF STEAM OR HOT WATER PIPES AND FLUES. PROVIDE APPROVED SEALS FOR ALL WORK INSTALLED IN HAZARDOUS AREAS AS REQUIRED BY NEC.

PROVIDE ACCESS DOORS IN WALLS AND CEILINGS FOR ACCESS TO PULL BOXES ACCESSORIES, ETC., UNDER THE ELECTRICAL CONTRACT. DOORS SHALL BE SIZED AS REQUIRED (MINIMUM 16-INCHES X 16-INCHES) WITH A FINISH TO MATCH THAT OF THE SURFACE IN WHICH IT IS INSTALLED.

PROVIDE A MINIMUM 100 POUND TEST, NYLON PULL CORD IN ALL EMPTY CONDUITS. CONDUIT PENETRATIONS THROUGH FIRE-RATED WALLS OR FLOOR SLABS SHALL BE SEALED WITH IMPERVIOUS, NON-COMBUSTIBLE MATERIALS IN SUCH A MANNER THAT THE ORIGINAL FIRE RATING IS RESTORED. CONDUIT PENETRATING BLOCK WALLS SHALL BE SLEEVED AND THEN SEALED. ALSO SEAL ALL WALL AND FLOOR PENETRATIONS LEFT ONCE CONDUIT TO BE DEMOLISHED HAS BEEN REMOVED. ALL PENETRATIONS SHALL BE SEALED USING UL LISTED METHODS.

OUTLET BOXES SHALL BE STANDARD GALVANIZED SHEET STEEL WITH STAMPED KNOCKOUTS EXCEPT THAT CAST TYPE BOXES SHALL BE USED IN INTERIOR WET LOCATIONS (INCLUDING KITCHENS), ON THE EXTERIOR OF THE BUILDING, AND FOR EXPOSED WORK IN UNFINISHED AREAS. COVERS FOR CAST BOXES IN WET AND EXTERIOR LOCATIONS SHALL BE GASKETED. MULTI-GANG BOXES SHALL BE OF SINGLE PIECE CONSTRUCTION. PULL BOXES SHALL BE CONSTRUCTED OF THE CODE GAUGE GALVANIZED SHEET METAL AND HAVE CONTINUOUS WELDED SEAMS. PULL BOXES SHALL COMPLY WITH NEC ARTICLE 370.

WIRING: POWER WIRING SHALL BE HI-TECH, ROME, SOUTHWIRE, TRIANGLE OR APPROVED EQUAL.

CONDUCTORS SHALL BE COPPER, THW, OR THHN/THWN, SOLID FOR CONDUCTORS SMALLER THAN #10 AWG AND STRANDED FOR LARGER SIZE CONDUCTORS. POWER FEEDERS ORIGINATING FROM THE DISTRIBUTION SECTION OF MAIN SWITCHGEAR SHALL BE TYPE XHHW OR THHN. ALL 120/208 VOLT ALTERNATING CURRENT (VAC) CONDUCTOR SHALL BE COLOR-CODED BLACK, RED, BLUE, WHITE AND GREEN FOR PHASES A, B, C, NEUTRAL, AND GROUND RESPECTIVELY. ALL 277/480 VOLT ALTERNATING CURRENT (VAC) CONDUCTORS SHALL BE COLOR-CODED BROWN, ORANGE, YELLOW, GRAY AND GREEN FOR PHASES A, B, C, NEUTRAL, AND GROUND RESPECTIVELY. LOW VOLTAGE CONDUCTORS SHALL BE SOLID OR STRANDED AS REQUIRED BY THE EQUIPMENT/SYSTEM MANUFACTURER.

ALL CONDUCTORS AND CABLES SHALL BE INSTALLED IN RACEWAYS EXCEPT AS FURTHER SPECIFIED HEREIN OR ON THE DRAWINGS. CONDUCTOR SIZES INDICATED ON CIRCUIT HOMERUNS OR IN PANELBOARD SCHEDULES SHALL BE INSTALLED OVER THE ENTIRE LENGTH OF THE CIRCUIT UNLESS NOTED OTHERWISE ON THE DRAWINGS. IT SHALL NOT BE PERMISSIBLE TO COMBINE CIRCUIT HOMERUNS INTO A SINGLE RACEWAY UNLESS SPECIFICALLY SHOWN ON PLANS AND NO MORE THAN THREE PHASE CONDUCTORS IS PERMITTED TO BE INSTALLED IN A SINGLE RACEWAY. ONLY ONE CIRCUIT PER CONDUIT SHALL BE ALLOWED FOR ISOLATION CIRCUITS. ISOLATION CIRCUITS SHALL BE RUN IN A MANNER TO PROVIDE THE SHORTEST DISTANCE.

VOLTAGE DROP SHALL NOT EXCEED: 3% MAXIMUM ON BRANCH CIRCUITS AND 2% MAXIMUM OF FEEDERS.

ELECTRICAL CONDUCTORS SHALL BE TESTED FOR CONTINUITY AND GROUNDS BEFORE BEING ENERGIZED. ALL FAULTY CONDUCTORS SHALL BE REPLACED. CONNECT ALL EQUIPMENT REQUIRING ELECTRICAL CONNECTIONS EXCEPT CONTROL CONDUCTORS FOR EQUIPMENT NOT PROVIDED UNDER DIVISION 26. CONTROL CONDUCTOR CONNECTIONS NOT PROVIDED UNDER DIVISION 26 SHALL BE DONE BY THE RESPECTIVE CONTRACTOR IN ACCORDANCE WITH THE SPECIFICATIONS. MAKE ALL FINAL POWER CONNECTIONS TO EACH RESPECTIVE LOAD TO ACHIEVE FULL ENERGIZATION OF THE LOAD. THIS SHALL INCLUDE WIRING THROUGH ANY INTEGRAL DISCONNECT DEVICE AND/OR CONTROL CABINET FURNISHED AS PART OF THE RESPECTIVE EQUIPMENT. COORDINATE THE POWER AND CONNECTION REQUIREMENTS FOR EQUIPMENT FURNISHED BY CONTRACTORS OF OTHER DIVISIONS. VERIFY THAT THE CIRCUITRY SHOWN FOR EACH LOAD MATCHES THE LOAD'S ACTUAL REQUIREMENTS SHOWN ON THE NAMEPLATE DATA OR MANUFACTURER'S PUBLISHED CRITERIA. INFORM THE ARCHITECT IF ADJUSTMENTS TO CONDUIT, WIRING, FUSE SIZES, ETC., ARE NEEDED TO MEET THE LOADS ACTUAL REQUIREMENTS. CHANGES TO EQUIPMENT DUE TO AN APPROVED SUBSTITUTION OR OTHERWISE NECESSARY TO SUIT A MANUFACTURERS NEEDS SHALL INCLUDE THE COST BY THE MANUFACTURER FOR MAKING ELECTRICAL CHANGES.

THE CONDUIT OF THE ELECTRICAL SYSTEM AND ALL ELECTRICAL EQUIPMENT SHALL BE GROUNDED. PROVIDE AN EQUIPMENT GROUNDING CONDUCTOR WITH EVERY CIRCUIT AND IN EVERY CONDUIT. THE CONDUIT SYSTEM AND NEUTRAL (GROUNDED CONDUCTOR) SHALL BE BONDED TOGETHER ONLY AT THE SERVICE ENTRANCE EQUIPMENT. GROUNDING AT THE SERVICE ENTRANCE SHALL BE IN ACCORDANCE WITH NEC ARTICLE 250. NO CONDUIT SHALL CONTAIN MORE THAN THREE PHASE CONDUCTORS.

DEVICES: WIRING DEVICES SHALL BE HUBBELL, PASS & SEYMOUR OR ARROW-HART.

ALL WIRING DEVICES SHALL BE SPECIFICATION GRADE. ALL WIRING DEVICES SHALL BE HOSPITAL GRADE IN PATIENT CARE AREAS. THE COLOR SHALL BE SELECTED BY THE ARCHITECT, FROM THE MANUFACTURER'S STANDARD COLORS DURING SHOP DRAWING REVIEW. COLORS SHALL INCLUDE BROWN, IVORY, GRAY AND WHITE AS A MINIMUM. ALL DEVICES CONNECTED TO THE EMERGENCY POWER SYSTEM SHALL BE RED. DEVICE PLATES FOR FLUSH MOUNTED DEVICES SHALL BE STANDARD SIZE, NYLON OR LEXAN TYPES EQUAL TO HUBBELL'S "N" SERIES. PROVIDE OVERSIZE PLATES FOR DEVICES INSTALLED IN CONCRETE BLOCK, BRICK OR STONE CONSTRUCTION.

RECEPTACLES, PLUGS, AND PLUG CONNECTORS SHALL BE HEAVY-DUTY, COMMERCIAL GRADE. THE BODY SHALL BE CONSTRUCTED OF THERMOPLASTIC (NYLON, LEXAN) MATERIAL. RECEPTACLES SHALL BE NON-INTERCHANGEABLE TYPES OF STANDARD NEMA CONFIGURATION AS INDICATED ON THE DRAWINGS. COMPLY WITH THE RESPECTIVE ANSI C73 SERIES STANDARD FOR THE NEMA CONFIGURATION USED. RECEPTACLES SHALL BE UL LISTED AND LABELED AND SHALL CONFORM TO NEMA STANDARD NO. WDI-101968. ALL DEVICES SHALL BE LABELED PER PALMETTO HEALTH RICHLAND ENGINEERING STANDARDS.

DUPLEX RECEPTACLES SHALL BE OF THE GROUNDING, POWER INDICATING TYPE, ARRANGED FOR BACK AND SIDE WIRING WITH SPRING-BACKED LINE TERMINALS AND SEPARATE SINGLE OR DOUBLE GROUNDING TERMINALS. DUPLEX RECEPTACLES SHALL BE RATED FOR 20 AMP 125 VOLT OPERATION AND THE FACE CONFIGURATION SHALL CONFORM TO NEMA STANDARD NO. WDI.101968. A SEPARATE GROUNDING SCREW TERMINAL SHALL BE PROVIDED WITH A DIRECT CONNECTION MADE TO A GREEN INSULATED EQUIPMENT GROUNDING CONDUCTOR WHICH IS PART OF THE EQUIPMENT GROUNDING SYSTEM. SELF GROUNDING OR AUTOMATIC GROUNDING TYPE RECEPTACLES ARE NOT ACCEPTABLE.

GROUND FAULT CIRCUIT INTERRUPTING DUPLEX RECEPTACLES SHALL BE SELF-CONTAINED, NEMA 5-20R, HEAVY DUTY, COMMERCIAL GRADE WITH FEED-THRU FEATURE TO PROTECT DOWNSTREAM DEVICES ON THE SAME CIRCUIT. SURGE SUPPRESSOR RECEPTACLES SHALL BE PERMANENTLY CONNECTED. FLUSH MOUNTED TYPE AND PROVIDE PROTECTION OF NOT LESS THAN 80 JOULES IN ALL THREE MODES: HOT TO NEUTRAL, NEUTRAL TO GROUND, AND HOT TO GROUND. EACH MODE SHALL UTILIZE A SEPARATE MOV TO ACCOMPLISH PROTECTION AND AN INTEGRAL INDICATING LIGHT SHALL BE INCLUDED IN EACH DEVICE.

THE FACE OF RECEPTACLES CONNECTED TO EMERGENCY BRANCH CIRCUITS SHALL BE RED IN COLOR.

SWITCHES PROVIDED FOR CONTROLLING LIGHT FIXTURES SHALL BE THERMOPLASTIC, HEAVY DUTY, SPECIFICATION GRADE. SWITCHES SHALL BE ARRANGED FOR BACK AND SIDE WIRING AND SHALL HAVE A GROUNDING TERMINAL. SWITCHES SHALL BE VIRTUALLY SILENT OPERATING, NONINTERCHANGEABLE, FLUSH MOUNTED TYPES WHICH SHALL COMPLY WITH NEMA WD-1. LIGHT SWITCHES CONTROLLING LIGHT FIXTURES ON EMERGENCY POWER SHALL HAVE HANDLES WHICH ARE ILLUMINATED IN THE "OFF" POSITION. SWITCHES SHALL BE UL LISTED AND LABELED FOR OPERATION AT THE VOLTAGE AND AMPERAGES NECESSARY FOR THE USE INDICATED. NO 120 VOLT OR 277 VOLT SWITCH SHALL BE RATED LESS THAN 20 AMPERES.

POWER EQUIPMENT: POWER EQUIPMENT SHALL BE SQUARE D OR GENERAL ELECTRIC

LIGHTING EQUIPMENT:

PROVIDE LIGHTING FIXTURES AS SCHEDULED ON THE DRAWINGS OF SIZES, TYPES AND RATINGS INDICATED; COMPLETE WITH BUT NOT NECESSARILY LIMITED TO, HOUSING, LAMPS, LAMP HOLDERS, REFLECTORS, BALLASTS, STARTERS, WIRING, MOUNTING HARDWARE, POLES, AND POLE BASES. CATALOG NUMBERS ARE FOR GENERAL IDENTIFICATION OF FIXTURES ONLY. IT IS THE RESPONSIBILITY OF THE CONTRACTOR TO PROVIDE COMPLETE CATALOG NUMBERS AND TO PROVIDE ALL ACCESSORIES FOR A COMPLETE INSTALLATION AS IMPLIED BY THE ACCOMPANYING DESCRIPTION OF THE LIGHT FIXTURE, THE DEMONSTRATED USE ON THE DRAWINGS, AND THE SPECIFICATIONS CONTAINED HEREIN. ALL LIGHTING FIXTURES SHALL BE UL LABELED. THE LABEL SHALL BE PERMANENTLY ATTACHED TO THE FIXTURE FRAME, HOUSING OR OTHER NON-RENEWABLE COMPONENT. PROVIDE FIXTURES AND/OR FIXTURE OUTLET BOXES WITH HANGERS TO PROPERLY SUPPORT FIXTURE WEIGHT. FASTEN LIGHT FIXTURES AND LIGHT FIXTURE SUPPORTS SECURELY TO BUILDING STRUCTURAL MEMBERS. IT IS NOT PERMISSIBLE TO RELY ON SUSPENDED CEILINGS AS THE SOLE MEANS OF SUPPORT FOR LIGHT FIXTURES. REFER TO ARCHITECTURAL CEILING PLANS FOR CEILING TYPE AND PROVIDE LIGHT FIXTURES WHICH ARE COMPATIBLE WITH THE SURFACE OR CEILING IN OR ON WHICH IT WILL BE INSTALLED. DO NOT DEPEND ON CATALOG NUMBERS FOR SUCH INFORMATION. VOLTAGES OF ALL LIGHT FIXTURES SHALL BE DETERMINED BY THE CIRCUIT TO WHICH EACH FIXTURE IS CONNECTED. SEE LIGHTING FIXTURE SCHEDULE FOR ADDITIONAL REQUIREMENTS.

FIRE ALARM SYSTEM: SPECIAL SYSTEMS CABLES (FIRE ALARM) SHALL BE BELDEN, ALPHA OR CONSOLIDATED.

MODIFY THE EXISTING FIRE ALARM SYSTEM TO ACCOMMODATE THE ADDITION, DELETION, AND RELOCATION OF FIRE ALARM DEVICES. NEW DEVICES SHALL MATCH EXISTING DEVICES IN THIS AREA OF THE FACILITY. THE FIRE ALARM SYSTEM INSTALLATION SHALL MEET ALL NFPA 72 & NFPA 101 REQUIREMENTS. THE COMPLETE INSTALLATION AND SYSTEM TESTING SHALL BE UNDER THE SUPERVISION OF A FACTORY TRAINED AND AUTHORIZED REPRESENTATIVE OF THE EQUIPMENT MANUFACTURER. NEW NOTIFICATION DEVICES SHALL BE TIED INTO EXISTING NOTIFICATION APPLIANCE CIRCUITS THAT WERE FEEDING AREA PRIOR TO DEMOLITION. NEW DETECTION DEVICES SHALL BE TIED INTO EXISTING INITIATING DEVICE CIRCUITS THAT WERE FEEDING AREA PRIOR TO DEMOLITION. TEST ALL NEW DEVICES IN ACCORDANCE WITH NFPA 72 REQUIREMENTS AND PROVIDE A CERTIFICATE OF COMPLETION TO THE OWNER.

TELECOMMUNICATIONS SYSTEMS: PROVIDE A SYSTEM OF EMPTY CONDUITS AND SYSTEM OUTLET BOXES TO ACCOMMODATE INSTALLATION OF THE OWNER'S TELECOMMUNICATIONS SYSTEM. THE RACEWAY SYSTEM SHALL COMPLY WITH EIA/TIA 568 & 569 STANDARDS.

OTHER REQUIREMENTS:

TESTING: THE CONTRACTOR SHALL TEST ALL 'LIFE SAFETY' EQUIPMENT AND SYSTEMS FOR PROPER FUNCTION AND OPERATION. THE CONTRACTOR SHALL PROVIDE WRITTEN CONFIRMATION OF THE TEST TO THE ENGINEER STATING THE TEST PERFORMED, THE RESULTS OF THE TEST, AND THE DATE OF THE TEST. 'LIFE SAFETY' EQUIPMENT AND SYSTEMS ARE SPECIFIED IN NFPA 101.

FIRE ALARM SYMBOL SCHEDULE

NOTE: ALL FIRE ALARM SYSTEM CONDUIT SHALL BE ¾" MINIMUM UNLESS OTHERWISE NOTED.

(S)	SMOKE DETECTOR.
F◁	FIRE ALARM SPEAKER/STROBE. WALL MOUNTED.
F◀	FIRE ALARM STROBE ONLY. WALL MOUNTED.
(F)◁	FIRE ALARM SPEAKER/STROBE. CEILING MOUNTED.
(F)◀	FIRE ALARM STROBE ONLY. CEILING MOUNTED.
(F)	FIRE ALARM SPEAKER ONLY. CEILING MOUNTED.

INTERIOR LIGHT FIXTURE SCHEDULE

FIXTURE TYPE	DESCRIPTION	MANUFACTURER	LAMPS	CONTROLS	REMARKS	WATTS
A4	2' x 4', LED DIRECT-INDIRECT TROFFER, PAINTED AFTER FABRICATION CODE GUAGE STEEL HOUSING. ELECTRONIC 0-10V DIMMING LED DRIVER. 4000K CCT. UNV VOLT.	WILLIAMS #LT24-L82-8-40-AF-DIM-UNV SERIES COLUMBIA #LCAT-24-VL-ED SERIES OR APPROVED EQUAL PHILIPS, LITHONIA	LED 8200 LUMENS	SWITCH OR SWITCH VIA OCC SENSOR	HALF SHADING INIDICATES FIXTURE CONNECTED TO EMERGENCY GENERATOR	38 PER 4'
	EXIT SIGN UNIVERSAL MOUNTING WITH FIELD SELECTABLE CHEVRON ARROWS; PROVIDE NUMBER OF FACES (SINGLE/DUAL) AS INDICATED ON PLAN SHEETS. RED LETTERS. MATCH EXISTING EXIT SIGNS. UL 924 LISTED, UNIVERSAL VOLTAGE.	MATCH EXISTING EXIT SIGNS	LED INCLUDED	UNSWITCHED	EXIT SIGN	

GENERAL NOTES:

1. THE CONTRACTOR SHALL COMPLY WITH NFPA 70 – THE NATIONAL ELECTRICAL CODE. ANY DISCREPANCIES BETWEEN THE PLANS AND NEC SHALL BE BROUGHT TO THE ATTENTION OF THE ENGINEER PRIOR TO INSTALLATION OF EQUIPMENT.
2. THE CONTRACTOR SHALL MAINTAIN A COMPLETE SET OF PLANS AND SPECIFICATIONS ON SITE DURING CONSTRUCTION. ALL WORK SHALL BE CAREFULLY COORDINATED WITH THE PLANS/SPECIFICATIONS AND WITH ALL OTHER TRADES. ANY CONFLICTS SHALL BE RESOLVED PRIOR TO THE INSTALLATION OF ANY WORK.
3. THE CONTRACTOR SHALL MAINTAIN A COMPLETE SET OF SHOP DRAWINGS ON SITE DURING CONSTRUCTION.
4. THE CONTRACTOR SHALL CAREFULLY COORDINATE THE EXACT MOUNTING HEIGHT AND LOCATION OF ALL WALL MOUNTED DEVICES WITH ARCHITECTURAL INTERIOR ELEVATIONS, MILLWORK DETAILS, AND EQUIPMENT VENDOR SHOP DRAWINGS PRIOR TO ROUGH-IN.
5. THE CONTRACTOR IS CAUTIONED THAT OWNER REQUIREMENTS MAY REQUIRE SCHEDULING OF CERTAIN PORTIONS OF WORK AFTER NORMAL BUSINESS HOURS AND ON WEEKENDS. THE OWNER SHALL APPROVE THE WORK SCHEDULE PRIOR TO COMMENCING WORK. THE CONTRACTOR SHALL INCLUDE IN BID FOR SUCH AFTER HOURS WORK.
6. THE CONTRACTOR SHALL NOT INTERRUPT POWER FROM ANY PANEL OR LOAD WITHOUT THE WRITTEN PERMISSION OF THE OWNER. ALL REQUIRED POWER INTERRUPTIONS SHALL BE SCHEDULES WITH THE OWNER AT LEAST ONE WEEK IN ADVANCE. REQUESTS FOR INTERRUPTIONS SHALL BE MADE IN WRITING, STATING DATE, TIME, AND ESTIMATED DURATION OF INTERRUPTION. SCHEDULE AND PERFORMANCE OF WORK SHALL MINIMIZE THE NUMBER AND DURATION OF POWER INTERRUPTIONS.
7. THE CONTRACTOR SHALL PROVIDE HORIZONTAL SEPARATION BETWEEN ALL BACK TO BACK RECESSED WALL MOUNTED DEVICES.
8. ACCESSIBLE CEILING SPACE SHALL BE LAY-IN CEILING AREAS, NOT GYPSUM (HARD) CEILING TYPE AREAS.

ABBREVIATIONS:

A OR AMP	AMPERES
C	CONDUIT
GF	GROUND FAULT CIRCUIT INTERRUPTER
J OR JB	JUNCTION BOX
KVA	KILOVOLT-AMPERES
KW	KILOWATTS
NEC	NATIONAL ELECTRICAL CODE
NTS	NOT TO SCALE
P	POLES OR PHASE
SPEC	SPECIFICATIONS
TYP	TYPICAL
V	VOLTS
WP	WEATHERPROOF

SSOE
S&W

PROFESSIONAL SEALS:

SOUTH CAROLINA CERTIFICATE OF AUTHORIZATION SSOE, INC No. 746

SOUTH CAROLINA REGISTERED PROFESSIONAL ENGINEER No. 16536 BRIAN K. BRANHAM 8/06/21

SUBMITTAL/REVISION SCHEDULE:

NO.	DATE	DESCRIPTION
	8.06.2021	CONSTRUCTION DOCUMENTS

■ APPROVED FOR CONSTRUCTION
☐ NOT APPROVED FOR CONSTRUCTION

CLIENT INFORMATION:

SOUTH CAROLINA EDUCATION LOTTERY

South Carolina Education Lottery ®

CLIENT PROJECT #: 20048.00
JHA PROJECT #: Y20-N001-CB

PROJECT INFORMATION:

4TH FLOOR UPFIT

1333 MAIN STREET, COLUMBIA, SOUTH CAROLINA

SSOE/SW PROJECT #: 021-00531-00
SSOE/SW MANAGER: BILL FLEMING

SSOE | STEVENS & WILKINSON
1501 Main Street, Suite 730
Columbia, SC 29201
T. (803) 765-0320

THIS DRAWING IS THE PROPERTY OF SSOE | STEVENS & WILKINSON. UNAUTHORIZED USE OF ANY KIND, INCLUDING USE ON OTHER PROJECTS, IS PROHIBITED.
© SSOE, INC. 2021

ELECTRICAL SCHEDULES

E0.01

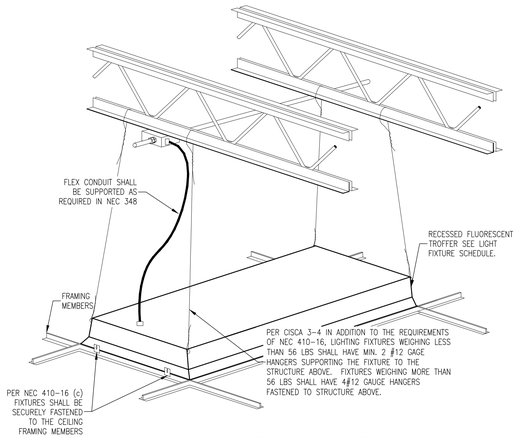

WHERE FIXTURES ARE HUNG IN A FIRE RATED CEILING, THE CEILING CONTRACTOR SHALL PROVIDE FIRE PROTECTION AS SHOWN IN UL FIRE RESISTANCE BOOK AS DESIGN NOTE P230 OR P510.

1 RECESSED LAY-IN FIXTURE DETAIL

SCALE: NTS

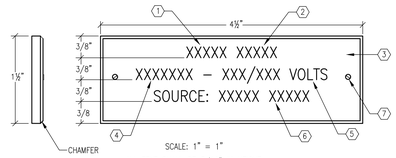

SCALE: 1" = 1"

ALL TEXT SHALL BE 3/16" IN HEIGHT

LABELS SHALL BE APPLIED TO ALL PANELS, DISCONNECTS SWBD'S, TRANSFORMERS AND BUS DUCTS.

LABEL NOTES:

1. TYPE OF EQUIPMENT WHERE X'S ARE INDICATED. POSSIBLE CHOICES ARE:
   "PANEL" "DISC"
   "XFMR" "SWBD"
2. EQUIPMENT NAME (EX. ELC1)
3. COLOR: (FACE/BACKGROUND)
   (BLK/WH) – NORMAL POWER
   (RED/WH) – ALL EMERGENCY POWER
4. SUPPLY SOURCE WHERE X'S ARE INDICATED. POSSIBLE CHOICES ARE:
   "NORMAL"
   "EMERGENCY"
5. INSERT VOLTAGE WHERE X'S ARE INDICATED. POSSIBLE CHOICES ARE:
   "277/480V" "480"
   "120/208V" "208"
6. INSERT SUPPLYING PANEL DESIGNATION WHERE X'S ARE INDICATED. (EX. PANEL 1PP1, XFMR 1T1). WHEN THIS EQUIPMENT IS SERVED DIRECTLY FROM A TRANSFORMER, THE PANEL SERVING THE TRANSFORMER SHALL ALSO BE LISTED.
7. SECURE SCREWS TO PANELBOARD COVER WITH #4-40 STAINLESS STEEL COUNTERSINK SCREWS WITH MATCHING NUTS AND LOCKWASHERS.

2 TYPICAL PANELBOARD LABEL DETAIL

SCALE: NTS

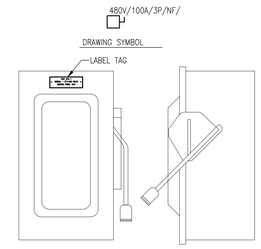

ALL SWITCHES SHALL BE HEAVY DUTY TYPE, FED. SPEC. W-S-865, U.L. 98, NEMA KSI-1975; 240V OR 600V TO SUIT CIRCUIT VOLTAGE. ALL SWITCHES FUSIBLE UNLESS NOTED ON DRAWINGS. PROVIDE FUSES TO SUIT LOAD. ENCLOSURES NEMA 3R OUTDOORS AND IN WET LOCATIONS. NEMA 1 ELSEWHERE UNLESS NOTED ON DRAWINGS.

QUICK MAKE – QUICK BREAK OPERATION.

OPERATING HANDLE LOCKABLE IN OPEN OR CLOSED POSITION.

COVER INTERLOCK AND INDICATOR HANDLE

3 DISCONNECT SWITCH DETAIL

SCALE: NTS

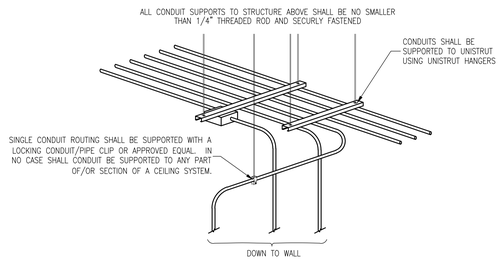

ALL CONDUIT ROUTING AND SUPPORTING SHALL COMPLY WITH SPECS, NEC 110-12 AND 340 THRU 362, WITH NO EXCEPTIONS. IF CONDUITS CAN NOT BE SUPPORTED FROM THE BUILDING STRUCTURE: CONDUIT ROUTING WITH THREE OR MORE CONDUITS GROUPED TOGETHER SHALL BE SUPPORTED FROM MINIMUM 3/4" UNISTRUT WITH A MINIMUM OF 2 SUPPORTING 1/4" ALL THREAD RODS FROM THE STRUCTURE ABOVE.

4 CONDUIT HANGING FOR MULTI/SINGLE ROUTING

SCALE: NTS

ALL WALL MOUNTED DEVICES SHALL BE COORDINATED WITH ARCHITECTURAL INTERIOR ELEVATIONS AND DETAILS. THE ARCHITECT SHALL DETERMINE FINAL PLACEMENT OF ALL DEVICES. REFER TO ARCHITECTURAL ELEVATION PLANS.

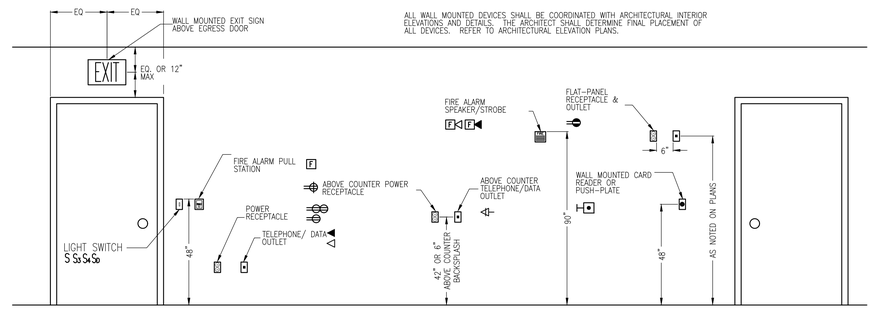

5 TYPICAL ELECTRICAL BACKBOX LAYOUT

SCALE: NTS

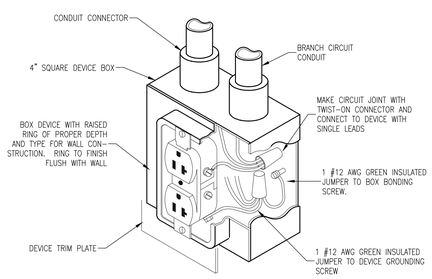

6 TYPICAL DUPLEX RECEPTACLE INSTALLATION

SCALE: NTS

SSOE

S&W

PROFESSIONAL SEALS:

SOUTH CAROLINA SSOE, INC. No. 746 CERTIFICATE OF AUTHORIZATION

SOUTH CAROLINA No. 16536 BRIAN K. BRAHAM 8/06/2

SUBMITTAL/REVISION SCHEDULE:

NO.	DATE	DESCRIPTION
	8.06.2021	CONSTRUCTION DOCUMENTS

■ APPROVED FOR CONSTRUCTION
□ NOT APPROVED FOR CONSTRUCTION

CLIENT INFORMATION:

SOUTH CAROLINA EDUCATION LOTTERY

South Carolina Education Lottery®

CLIENT PROJECT #:	20048.00
JHA PROJECT #:	Y20-N001-CB

PROJECT INFORMATION:

4TH FLOOR UPFIT

1333 MAIN STREET, COLUMBIA, SOUTH CAROLINA

SSOE/SW PROJECT #:	021-00531-00
SSOE/SW MANAGER:	BILL FLEMING

SSOE | STEVENS & WILKINSON
1501 Main Street, Suite 730
Columbia, SC 29201
T. (803) 765-0320

THIS DRAWING IS THE PROPERTY OF SSOE | STEVENS & WILKINSON. UNAUTHORIZED USE OF ANY KIND, INCLUDING USE ON OTHER PROJECTS, IS PROHIBITED.
© SSOE, INC. 2021.

ELECTRICAL DETAILS

E0.02

1 LIGHTING
LEVEL 4 FLOOR PLAN
1/4" = 1'-0"

GENERAL NOTES (THIS DRAWING ONLY):

A. ALL 120/208V CIRCUITS SHALL BE ROUTED TO PANEL DESIGNATED WITH 2#12, 1#12 GND, 3/4"C. WITH A 20A/1P BKR MINIMUM, UNLESS OTHERWISE REQUIRED. PROVIDE PHASE CONDUCTORS AS REQUIRED FOR NUMBER OF HOMERUNS INDICATED. MULTI-CIRCUIT HOMERUNS MAY SHARE NEUTRALS PROVIDED THEY MEET REQUIREMENTS OF NEC 210.4(B).

B. COORDINATE EXACT LOCATION OF LIGHT FIXTURES WITH ARCHITECTURAL REFLECTED CEILING PLANS.

C. COORDINATE EXACT LOCATION OF ALL WALL MOUNTED DEVICES WITH ARCHITECTURAL ELEVATION PLANS AND CEILING MOUNTED DEVICES WITH ARCHITECTURAL REFLECTED CEILING PLANS.

D. ALL EXIT SIGNS SHALL BE TYPE "X1" UNLESS OTHERWISE NOTED. ALL COMBO EXIT SIGNS SHALL BE TYPE "X2" UNLESS OTHERWISE NOTED. ALL EMERGENCY WALLPACKS SHALL BE TYPE "Y1" UNLESS OTHERWISE NOTED. ALL EXIT SIGNS AND EMERGENCY WALLPACKS SHALL BE CONNECTED UNSWITCHED TO THE LIGHTING BRANCH CIRCUIT IN EACH SPACE.

E. COORDINATE EXACT LIGHTING CONTROL EQUIPMENT CONNECTIONS REQUIRED WITH LIGHTING CONTROL EQUIPMENT SUPPLIER AND APPROVED LIGHTING CONTROLS EQUIPMENT SHOP DRAWINGS.

LIGHTING FLOOR PLAN KEY NOTES:

1. PROVIDE NEW LIGHT FIXTURES AS SHOWN. CONNECT NEW NORMAL LIGHTING TO EXISTING LIGHTING CIRCUIT ABANDONED DURING DEMOLITION. EXTEND EXISTING CIRCUIT TO NEW LIGHT FIXTURES AS REQUIRED. 3/4"C., 2 #12, #12 GND.
2. PROVIDE NEW LIGHT FIXTURES AS SHOWN. CONNECT NEW EMERGENCY LIGHTING TO EXISTING EMERGENCY LIGHTING CIRCUIT ABANDONED DURING DEMOLITION. EXTEND EXISTING CIRCUIT TO NEW LIGHT FIXTURES AS REQUIRED. 3/4"C., 2 #12, #12 GND.

SSOE

S&W

PROFESSIONAL SEALS:

SOUTH CAROLINA
SSOE, INC
No. 746
CERTIFICATE OF AUTHORIZATION

SOUTH CAROLINA
BRIAN K. BRAMHAM
No. 16536
8/06/21

SUBMITTAL/REVISION SCHEDULE:

NO.	DATE	DESCRIPTION
	8.06.2021	CONSTRUCTION DOCUMENTS

■ APPROVED FOR CONSTRUCTION
☐ NOT APPROVED FOR CONSTRUCTION

CLIENT INFORMATION:

SOUTH CAROLINA EDUCATION LOTTERY

South Carolina Education Lottery®

CLIENT PROJECT #:	20048.00
JHA PROJECT #:	Y20-N001-CB

PROJECT INFORMATION:

4TH FLOOR UPFIT

1333 MAIN STREET, COLUMBIA, SOUTH CAROLINA

SSOE/SW PROJECT #:	021-00531-00
SSOE/SW MANAGER:	BILL FLEMING

SSOE | STEVENS & WILKINSON
1501 Main Street, Suite 730
Columbia, SC 29201
T: (803) 765-0320

THIS DRAWING IS THE PROPERTY OF SSOE | STEVENS & WILKINSON. UNAUTHORIZED USE OF ANY KIND, INCLUDING USE ON OTHER PROJECTS, IS PROHIBITED.
© SSOE, INC. 2021.

LIGHTING
LEVEL 4 FLOOR PLAN

E1.41

1 POWER & COMMUNICATIONS
LEVEL 4 FLOOR PLAN
1/4" = 1'-0"

GENERAL NOTES (THIS DRAWING ONLY):

A. ALL 120/208V CIRCUITS SHALL BE ROUTED TO PANEL DESIGNATED WITH 2#12, 1#12 GND, 3/4"C. WITH A 20A/1P BKR MINIMUM, UNLESS OTHERWISE REQUIRED. PROVIDE PHASE CONDUCTORS AS REQUIRED FOR NUMBER OF HOMERUNS INDICATED. MULTI-CIRCUIT HOMERUNS MAY SHARE NEUTRALS PROVIDED THEY MEET REQUIREMENTS OF NEC 210.4(B).

B. COORDINATE EXACT LOCATION OF ALL WALL MOUNTED DEVICES WITH ARCHITECTURAL ELEVATION PLANS AND CEILING MOUNTED DEVICES WITH ARCHITECTURAL REFLECTED CEILING PLANS.

C. COORDINATE EXACT EQUIPMENT POWER CONNECTIONS REQUIRED WITH EQUIPMENT SUPPLIER AND APPROVED EQUIPMENT SHOP DRAWINGS.

D. ALL RECEPTACLES IN SPECIAL EDUCATION CLASSROOMS AND ASSOCIATED SPACES SHALL BE TAMPER-PROOF TYPE.

E. VERIFY THE EXACT LOCATION OF ALL FLOORBOXES WITH A DIMENSIONED PLAN FROM THE ARCHITECT PRIOR TO ROUGH-IN.

POWER & COMMUNICATIONS FLOOR PLAN KEY NOTES:

1. RELOCATE EXISTING POWER RECEPTACLE FOR SMALL CUTTER AS SHOWN. EXTEND EXISTING CIRCUIT AS REQUIRED. 0.75"C., 2 #12, #12 GND.
2. RELOCATE EXISTING POWER RECEPTACLE FOR LARGE FORMAT PRINTER AS SHOWN. EXTEND EXISTING CIRCUIT AS REQUIRED. 0.75"C., 2 #12, #12 GND.
3. RELOCATE EXISTING POWER RECEPTACLE FOR SERVICE TO LARGE CUTTER AS SHOWN. EXTEND EXISTING CIRCUIT AS REQUIRED. 0.75"C., 2 #12, #12 GND.
4. EXISTING PAGING SYSTEM SPEAKER TO BE RELOCATED TO NEW CEILING AS SHOWN. EXTEND EXISTING PAGING SYSTEM CIRCUIT AS REQUIRED. 0.75"C., WITH CABLE PER MANUFACT.
5. EXISTING FIRE ALARM STROBE NOTIFICATION APPLIANCE TO BE RELOCATED TO NEW CEILING AS SHOWN. EXTEND EXISTING FIRE ALARM NAC CIRCUIT AS REQUIRED. 0.75"C., WITH CABLE PER MANUFACT.
6. EXISTING FIRE ALARM VOICE EVACUTATION SPEAKER NOTIFICATION APPLIANCE TO BE RELOCATED TO NEW CEILING AS SHOWN. EXTEND EXISTING FIRE ALARM VOICE EVAC SPEAKER CIRCUIT AS REQUIRED. 0.75"C., WITH CABLE PER MANUFACT.
7. PROVIDE NEW PAGING SYSTEM SPEAKER AS SHOWN. EXTEND EXISTING PAGING SYSTEM CIRCUIT TO NEW SPEAKER AS REQUIRED. 0.75"C., WITH CABLE PER MANUFACT.
8. PROVIDE NEW FIRE ALARM STROBE NOTIFICATION APPLIANCE AS SHOWN. EXTEND EXISTING FIRE ALARM NAC CIRCUIT TO NEW DEVICE AS REQUIRED. 0.75"C., WITH CABLE PER MANUFACT.
9. PROVIDE NEW FIRE ALARM VOICE EVACUTATION SPEAKER NOTIFICATION APPLIANCE AS SHOWN. EXTEND EXISTING FIRE ALARM VOICE EVAC SPEAKER CIRCUIT TO NEW SPEAKER AS REQUIRED. 0.75"C., WITH CABLE PER MANUFACT.
10. PROVIDE POWER TO NEW WATER SOURCE HEAT PUMP WSHP-01 AS SHOWN. PROVIDE NEW 20/3 BREAKER IN EXISTING PANEL LMP (LOTTERY MECHANICAL PANEL) AND CONNECT USING 0.75"C., 3 #12, #12 GND.
11. PROVIDE POWER TO NEW EXHAUST FAN LOCATED ON ROOF LEVEL AS SHOWN. REUSE EXISTING EXHASUST FAN CIRCUIT FROM EXISTING MOTOR CONTROL CENTER LOCATED ON ROOF LEVEL. EXTEND EXISTING CIRCUIT AS REQUIRED. 0.75"C., 3 #12, #12 GND.

PROFESSIONAL SEALS:

SOUTH CAROLINA CERTIFICATE OF AUTHORIZATION SSOE, INC No. 746

SOUTH CAROLINA PROFESSIONAL ENGINEER No. 16536 BRIAN K. BRAHAM Date 8/06/21

SUBMITTAL/REVISION SCHEDULE:

NO.	DATE	DESCRIPTION
	8.06.2021	CONSTRUCTION DOCUMENTS

■ APPROVED FOR CONSTRUCTION
☐ NOT APPROVED FOR CONSTRUCTION

CLIENT INFORMATION:

SOUTH CAROLINA EDUCATION LOTTERY

CLIENT PROJECT #:	20048.00
JHA PROJECT #:	Y20-N001-CB

PROJECT INFORMATION:

4TH FLOOR UPFIT

1333 MAIN STREET, COLUMBIA, SOUTH CAROLINA

SSOE/SW PROJECT #:	021-00531-00
SSOE/SW MANAGER:	BILL FLEMING

SSOE | STEVENS & WILKINSON
1501 Main Street, Suite 730
Columbia, SC 29201
T. (803) 765-0320

THIS DRAWING IS THE PROPERTY OF SSOE (STEVENS & WILKINSON). UNAUTHORIZED USE OF ANY KIND, INCLUDING USE ON OTHER PROJECTS, IS PROHIBITED.
© SSOE, INC. 2021

POWER & COMMUNICATIONS
LEVEL 4 FLOOR PLAN

E2.41

SEISMIC AND WIND REQUIREMENTS FOR FIRE PROTECTION SYSTEMS

INFORMATION FOR IBC-2018 /ASCE 7-16

A. EQUIPMENT, APPLIANCES AND SUPPORTS (INLCUDING ROOF CURBS & ROOF RAILS) EXPOSED TO WIND SHALL BE DESIGNED AND INSTALLED TO RESIST THE WIND PRESSURES DETERMINED IN ACCORDANCE WITH THE INTERNATIONAL BUILDING CODE. WHERE SEISMIC RESTRAINT IS REQUIRED, THE MORE DEMANDING FORCE OF WIND AND SEISMIC MUST BE USED. SEE SEISMIC INFORMATION CONTAINED IN THE STRUCTURAL DRAWINGS FOR SITE SPECIFIC INFORMATION ON SEISMIC DESIGN CATEGORY.SEE EQUIPMENT SCHEDULES AND DETAILS FOR SPECIFIC COMPONENT IMPORTANCE FACTOR DESIGNATIONS.
B. USE APPLICABLE TABLE BELOW TO DETERMINE SEISMIC RESTRAINT REQUIREMENTS FOR EACH MECHANICAL COMPONENT.
C. FOR ALL COMPONENTS REQUIRING SEISMIC RESTRAINT, THE COMPONENT SUPPORTS AND ATTACHMENTS SHALL BE DESIGNED BY A REGISTERED DESIGN PROFESSIONAL.
D. WHERE SEISMIC RESTRAINT IS REQUIRED, HOUSEKEEPING PADS NEEDED FOR THE INSTALLATION OF EQUIPMENT UNDER THIS CONTRACT MUST BE DESIGNED BY THE SEISMIC ENGINEER. DO NOT POUR ANY HOUSEKEEPING PADS PRIOR TO THE THE RECEIPT OF THE SEISMIC SUBMITTAL
E. SEISMIC RESTRAINTS FOR PIPING MUST BE SHOWN ON LAYOUT DRAWINGS SHOWING SPECIFIC RESTRAINT LOCATIONS ALONG WITH ACCOMPANYING DETAILS AND CALCULATIONS.
F. SEISMIC CATEGORY "C".

COMPONENT IMPORTANCE FACTOR (Ip) DESIGNATION

Ip = 1.0	Ip = 1.5
	• ALL PIPING, CONTROLLERS, APPURTENANCES AND ELECTRICAL EQUIPMENT THAT ARE PART OF STAND PIPING AND SPRINKLER SYSTEMS

SEISMIC DESIGN CATEGORY C

	COMPONENT IMPORTANCE FACTOR (Ip)	
	1.0	1.5
COMPONENT IDENTIFICATION	SEISMIC RESTRAINT REQUIREMENT	SEISMIC RESTRAINT REQUIREMENT
ROOF MOUNTED	NOT REQUIRED	RESTRAIN ALL
FLOOR MOUNTED	NOT REQUIRED	RESTRAIN ALL
WALL MOUNTED	NOT REQUIRED	RESTRAIN ALL
COMPONENT SUPPORTS	NOT REQUIRED	RESTRAIN ALL
SUSPENDED EQUIPMENT	NOT REQUIRED	RESTRAIN ALL
SUSPENDED DUCTILE PIPING (STEEL, ALUMINUM, COPPER, ETC.)	NOT REQUIRED	>2" (SEE NOTE 3,4)
SUSPENDED NON DUCTILE PIPING (CAST IRON, PLASTIC, CERAMIC)	NOT REQUIRED	RESTRAIN ALL (SEE NOTE 3,4)
SUSPENDED PIPE ON TRAPEZE	NOT REQUIRED	RESTRAIN IF ANY PIPE ON TRAPEZE > 2" RESTRAIN IF TOTAL WEIGHT OF PIPES ON TRAPEZE > 10 LBS/FT (SEE NOTE 3,4)
COMPONENT CERTIFICATION (SEE NOTE 4)	NOT REQUIRED	REQUIRED

NOTES:
1. EQUIPMENT 20 LBS. OR LESS IS EXEMPT IF FLEXIBLE CONNECTIONS ARE PROVIDED BETWEEN THE COMPONENT AND ASSOCIATED PIPING AND CONDUIT.
2. RESTRAINTS ARE NOT REQUIRED IF THE COMPONENT WEIGHTS 400 LBS. OR LESS, IS MOUNTED AT 4 FT. OR LESS ABOVE A FLOOR, AND HAS FLEXIBLE CONNECTIONS BETWEEN THE COMPONENT AND ASSOCIATED PIPING AND CONDUIT.
3. RESTRAINT IS NOT REQUIRED IF THE PIPING IS SUPPORTED BY HANGERS AND EACH HANGER IN THE PIPING RUN IS 12 IN. OR LESS IN LENGTH FROM THE TOP OF THE PIPE TO THE SUPPORTING STRUCTURE. WHERE PIPES ARE SUPPORTED ON A TRAPEZE, THE TRAPEZE SHALL BE SUPPORTED BY HANGERS HAVING A LENGTH OF 12 IN. OR LESS. WHERE ROD HANGERS ARE USED, THEY SHALL BE EQUIPPED WITH SWIVELS, EYE NUTS OR OTHER DEVICES TO PREVENT BENDING IN THE ROD.
4. COMPONENT CERTIFICATION MUST BE SUPPLIED BY THE EQUIPMENT MANUFACTURER AT TIME OF SUBMITTAL FOR REVIEW BY ENGINEER OF RECORD.

DEMOLITION NOTES

1. THESE DRAWINGS ARE BASED ON EXISTING PLANS. REFER TO ARCHITECTURAL DRAWINGS FOR EXACT LOCATION OF DEMOLITION AREAS. THE CONTRACTOR SHALL THOROUGHLY INVESTIGATE THE EXISTING CONDITIONS PRIOR TO BID.

2. THE PURPOSE AND INTENT OF DEMOLITION SHEET IS TO SHOW THE CONTRACTOR ITEMS REQUIRED TO BE REMOVED, BUT IS IN NO WAY LIMITED TO THE ITEMS SHOWN. ALL BIDDERS ARE REQUIRED TO MAKE AN ON-SITE VISIT AND INSPECT EXISTING MECHANICAL CONDITIONS BEFORE FINAL BID DATE.

3. ON-SITE INSPECTIONS ARE REQUIRED TO OCCUR PRIOR TO FINAL BID DATE TO DETERMINE ALL EXISTING CONDITIONS AND COORDINATE POWER DOWN TIMES. BIDDING CONTRACTORS ARE REQUIRED TO SURVEY ALL AREAS OF THE BUILDING PRIOR TO BIDDING TO VIEW THE EXISTING CONDITIONS. ANY ADDITIONAL WORK REQUIRED OR CLARIFICATIONS TO THE WORK SHOWN THAT COULD HAVE BEEN REASONABLY VERIFIED BY THE SURVEY SHALL BE THE RESPONSIBILITY OF THE CONTRACTOR.

4. PERFORM ALL CUTTING AND DRILLING REQUIRED. PATCH ALL HOLES, PAINT AND OTHERWISE REPAIR ALL DAMAGES TO THE BUILDING STRUCTURE AND SURFACES WHICH OCCUR AS A RESULT OF THIS PROJECT. REPAIRS SHALL RESTORE THE STRUCTURE TO THE SAME CONDITION EXISTING PRIOR TO BEGINNING WORK.

5. ANY DAMAGE TO EXISTING CONDITIONS CAUSED BY DEMOLITION AND/OR NEW WORK SHALL BE REPAIRED BY THE CONTRACTOR RESPONSIBLE FOR THE DAMAGE.

6. ANY NEW OR EXISTING PIPING PASSING THROUGH A NEW OR EXISTING WALL CARRYING A FIRE RATING SHALL BE SEALED TIGHT TO THE WALL WITH A UL APPROVED METHOD.

7. ALL DEMOLITION SHALL BE PERFORMED TO PREVENT THE ARBITRARY DESTRUCTION OR INTERRUPTION OF CONCEALED UTILITIES WHICH ARE INTENDED TO REMAIN IN USE AND THE ROUTING OF WHICH CAN NOT BE PREDETERMINED UNTIL DEMOLITION IS STARTED. ALL SUCH DISCOVERIES OF UTILITIES WHICH ARE IN A DIFFERENT LOCATION FROM THAT INDICATED, CHANGE DIRECTION FROM FLOOR-TO-FLOOR, ETC. OR ARE UNIDENTIFIED, SHALL BE REPORTED TO THE ARCHITECT BEFORE REMOVAL OR DISTURBANCE.

8. REMOVE, STORE, CLEAN, REINSTALL, RECONNECT, AND MAKE OPERATIONAL EQUIPMENT INDICATED FOR RELOCATION.

9. CONTRACTOR IS RESPONSIBLE FOR MAINTAINING BUILDING SERVICES DURING DEMOLITION INCLUDING ALL TESTING, SERVICE FEES, RENTAL OF TEMPORARY EQUIPMENT OR INSTALLATION AND CONNECTION OF TEMPORARY SERVICES.

10. WHERE WALLS, FLOORS OR CEILINGS ARE CUT, REMOVED OR DAMAGED FOR INVESTIGATING EXISTING CONDITIONS, DEMOLISHING SERVICES, INSTALLING NEW SERVICES, ETC. THE CONTRACTORS SHALL COORDINATE THE PATCHING OF THE WALLS, FLOORS & CEILINGS TO MATCH EXISTING WITH THE BUILDING FINISHES CONTRACTOR AND/OR GENERAL CONTRACTOR.

11. NEW WORK SHOWN IS SUGGESTED ROUTING. CONTRACTOR SHALL FIELD INVESTIGATE EXISTING SERVICES AVAILABLE. BASED ON THE CONTRACTORS DISCOVERIES, THEY MAY SUGGEST ALTERNATE ROUTINGS. THE ENGINEER OF RECORD SHALL MAKE THE FINAL DETERMINATION ON WHETHER THE SERVICES SHALL BE INSTALLED AS SHOWN OR AS SUGGESTED BY THE CONTRACTOR.

12. WHERE PIPE, INSULATION, OR EQUIPMENT TO REMAIN IS DAMAGED OR DISTURBED, REMOVE DAMAGED PORTIONS AND INSTALL NEW PRODUCTS OF EQUAL CAPACITY AND QUALITY.

SYMBOLS

—FP-D—	FP-D 1
—FP-O—	FP-O 1
—FP-PA—	FP-PA 1
—FP-W—	FP-W 1
—FP-DOM-W—	FP-DOM-W 2
	UPRIGHT SPRINKLER HEAD
	PENDENT SPRINKLER HEAD
	RECESSED SPRINKLER HEAD
	CONCEALED SPRINKLER HEAD
	SIDEWALL SPRINKLER HEAD
	EXTENDED COVERAGE SIDEWALL SPRINKLER HEAD
D	'D' REPRESENTS DRY SPRINKLER HEAD
48"x18" S/A	OBSTRUCTION FROM DUCTWORK 48" AND GREATER

ABBREVIATIONS

&	AND	HYD	HYDRANT
Ø	ROUND	ID	INDIRECT
A	AIR	IN	INCH
AB	ABOVE BASE	INL	INLET
ABV	ABOVE	INSUL	INSULATION
AC	AIR CONDITIONING	INT	INTERIOR
ACOUS	ACOUSTICAL	INV	INVERT
AD	AREA DRAIN	INWG	INCHES WATER GAUGE
ADD	ADDENDUM	JT	JOINT
ADDL	ADDITIONAL	LAB	LABORATORY
AFF	ABOVE FINISHED FLOOR	LB	POUND
AFUE	ANNUAL FUEL UTILIZATION EFFICIENCY	LB/HR	POUNDS PER HOUR
AG	ABOVE GROUND	LAT	LEAVING AIR TEMPERATURE
ALT	ALTERNATE	LF	LINEAL FOOT
ALUM	ALUMINUM	LOC	LOCATION
AP	ACCESS PANEL	LP	LOW PRESSURE
APPROX	APPROXIMATE	LPG	LIQUEFIED PETROLEUM GAS
ARCH	ARCHITECT/ARCHITECTURAL	LR	LIQUID REFRIGERANT
AV	ACID RESISTANT VENT	LVR	LOUVER
AW	ACID RESISTANT WASTE	LWT	LEAVING WATER TEMPERATURE
AUTO	AUTOMATIC	M/A	MIXED AIR
BFF	BELOW FINISHED FLOOR	MAN	MANUAL
BLDG	BUILDING	MATL	MATERIAL
BLW	BELOW	MAV	MANUAL AIR VENT
BM	BEAM	MAX	MAXIMUM
BO	BY OTHER	MBD	MOTORIZED BYPASS DAMPER
BOT	BOTTOM	MBH	ONE THOUSAND BTU PER HOUR
BSMT	BASEMENT	MCF	ONE THOUSAND CUBIC FEET
BTU	BRITISH THERMAL UNITS	MCW	MAKE-UP COLD WATER
BTUH	BRITISH THERMAL UNITS PER HOUR	MD	MOTORIZED DAMPER
BTWN	BETWEEN	MECH	MECHANICAL
CAP	CAPACITY	MFR	MANUFACTURER
CB	CATCH BASIN	MH	MANHOLE
CCW	COUNTER CLOCKWISE	MIN	MINIMUM
CFCV	CONSTANT FLOW CONTROL VALVE	MISC	MISCELLANEOUS
CFM	CUBIC FEET PER MINUTE	MTR	MOTOR
CHW	CIRCULATING HOT WATER	MU/A	MAKE-UP/AIR
CI	CAST IRON	N	NECK
CLG	CEILING	NC	NOISE CRITERIA
CLG	COOLING	NC	NORMALLY CLOSED
CO	CLEAN OUT	NIC	NOT IN CONTRACT
COL	COLUMN	NO	NUMBER
COMB	COMBINATION	NO	NORMALLY OPEN
CONC	CONCRETE	NOM	NOMINAL
COND	CONDENSATE	NTS	NOT TO SCALE
CONF	CONFERENCE	O	OXYGEN
CONN	CONNECT	O/A	OUTSIDE AIR
CONST	CONSTRUCTION	OC	ON CENTER
CONT	CONTINUE/CONTINUATION	OF	OVERFLOW
CONTR	CONTRACT/CONTRACTOR	OPNG	OPENING
COORD	COORDINATE	PD	PRESSURE DROP
CTR	CENTER	PIV	POST INDICATOR VALVE
CUFT	CUBIC FEET	PLBG	PLUMBING
CV	CHECK VALVE	PR	PAIR
CW	COLD WATER	PREL	PRELIMINARY
CW	CLOCKWISE	PRESS	PRESSURE
D	DEGREE	PRIM	PRIMARY
DB	DRY BULB	PRV	PRESSURE REDUCING VALVE
DET	DETAIL	PSI	POUNDS PER SQUARE INCH
DIA	DIAMETER	PSIG	POUNDS PER SQUARE INCH GAUGE
DIAG	DIAGONAL	PW	POTABLE WATER
DISCH	DISCHARGE	PWR	POWER
DIV	DIVISION	R	DUCT RISER
DI	DEIONIZED WATER	R/A	RETURN AIR
DMPR	DAMPER	RCP	RADIANT CEILING PANEL
DN	DOWN	RD	ROOF DRAIN
DWG	DRAWING	REC	RECESSED
DW	DISTILLED WATER	RED	REDUCER
EA	EACH	REFR	REFRIGERATION
EAT	ENTERING AIR TEMPERATURE	RH	RELATIVE HUMIDITY
EL	ELBOW	REQD	REQUIRED
ELEC	ELECTRICAL	REV	REVERSE
ELEV	ELEVATION	RL/A	RELIEF AIR
EP	EXPLOSION PROOF	RM	ROOM
EQ	EQUAL	RPM	REVOLUTIONS PER MINUTE
EQUIP	EQUIPMENT	RSD	ROOF SAFETY DRAIN
EWC	ELECTRIC WATER COOLER	RW	RAIN WATER
EWT	ENTERING WATER TEMPERATURE	SF	SQUARE FOOT
E/A	EXHAUST AIR	S/A	SUPPLY AIR
EAH	EXHAUST HOOD	SAN	SANITARY
EXIST	EXISTING	SCHED	SCHEDULE
EXP	EXPANSION	SECT	SECTION
EXPJT	EXPANSION JOINT	SF	SQUARE FOOT
EXT	EXTERIOR	SD	SMOKE DAMPER
F	DEGREES FAHRENHEIT	SHT	SHEET
FCO	FLOOR CLEAN OUT	SIM	SIMILAR
FD	FLOOR DRAIN	SLV	SLEEVE
FD	FIRE DAMPER	SM	SURFACE MOUNT
FDV	FIRE DEPARTMENT VALVE	SP	STANDPIPE
FHC	FIRE HOSE CABINET	SP	STATIC PRESSURE
FL	FLOOR	SPEC	SPECIFICATION
FLEX	FLEXIBLE	SPS	STATIC PRESSURE STATION
FLG	FLANGE	SQ	SQUARE
FO	FUEL OIL	SR	SUCTION REFRIGERANT
FOV	FUEL OIL VENT	SS	STAINLESS STEEL
FOR	FUEL OIL RETURN	STD	STANDARD
FOS	FUEL OIL SUPPLY	STM	STEAM
FPM	FEET PER MINUTE	STRUCT	STRUCTURAL
FRP	FIBERGLASS REINFORCED PIPE	SUCT	SUCTION
FS	FULL SIZE	SUSP	SUSPENDED
FS	FLOOR SINK	T	THERMOSTAT
FT	FOOT/FEET	TCP	TEMPERATURE CONTROL PANEL
FTG	FOOTING	TD	TEMPERATURE DROP
FTR	FIN TUBE RADIATION	TDR	TRENCH DRAIN
FUT	FUTURE	TEFC	TOTALLY ENCLOSED FAN COOLED
GA	GAGE/GAUGE	TEMP	TEMPERATURE
GAL	GALLON	TYP	TYPICAL
GALV	GALVANIZED	UFD	UNDER FLOOR DUCT
GC	GENERAL CONTRACTOR	UG	UNDERGROUND
GEN	GENERATOR	VAC	VACUUM
GENL	GENERAL	V	VENT
GPM	GALLONS PER MINUTE	VAV	VARIABLE AIR VOLUME
GR	GRADE	VEL	VELOCITY
GW	GREASE WASTE	VENT	VENTILATION
HB	HOSE BIB	VERT	VERTICAL
HD	HEAD	VOL	VOLUME
HHWR	HYDRONIC HOT WATER RETURN	VTR	VENT THROUGH ROOF
HHWS	HYDRONIC HOT WATER SUPPLY	W	WASTE
HORZ	HORIZONTAL	WB	WET BULB
HP	HORSE POWER	WCO	WALL CLEAN OUT
HP	HIGH PRESSURE	WH	WALL HYDRANT
HTG	HEATING		
HTR	HEATER		
HW	HOT WATER		

EQUIPMENT ABBREVIATIONS

AC	AIR CONDITIONING UNIT	FP	FIRE PUMP
ACC	AIR COOLED CONDENSER	GI	GREASE INTERCEPTOR
ACCU	AIR COOLING CONDENSING UNIT	GRV	GRAVITY ROOF VENTILATOR
AFMS	AIR FLOW MEASURING STATION	H	HUMIDIFIER
AHU	AIR HANDLING UNIT	HWP	HEATING WATER PUMP
AS	AIR SEPARATOR	HX	HEAT EXCHANGER
B	BOILER	HPU	HEAT PUMP UNIT
CF	CABINET FAN	HRU	HEAT RECOVERY UNIT
CF	CHEMICAL FEEDER	ILC	INLINE CENTRIFUGAL
CFP	CHEMICAL FEEDER PUMP	PF	PROPELLER FAN
CH	CHILLER	PRV	POWER ROOF VENTILATOR
CRU	CONDENSATE RETURN UNIT	PWF	POWER WALL FAN
CT	COOLING TOWER	RE	RETURN/EXHAUST FAN
CUH	CABINET UNIT HEATER	RTU	ROOFTOP UNIT
CWP	CONDENSER WATER PUMP	SA	SHOCK ABSORBER
CHWP	CHILLED WATER PUMP	SAT	SOUND ATTENUATOR
DBP	DOMESTIC WATER BOOSTER PUMP	SEP	SEWAGE EJECTOR PUMP
DC	DUCT MOUNTED COIL	SF	SUPPLY FAN
DCP	DOMESTIC WATER CIRCULATING PUMP	SP	SUMP PUMP
EF	EXHAUST FAN	UH	UNIT HEATER
EDC	ELECTRIC DUCT COIL	US	UTILITY SET
ET	EXPANSION TANK	UV	UNIT VENTILATOR
EWH	ELECTRIC WATER HEATER	WFMS	WATER FLOW MEASURING STATION
FCU	FAN COIL UNIT	WH	WATER HEATER

NOTES

1. COORDINATE EXACT LOCATIONS AND INVERTS FOR ALL OUTSIDE UTILITIES BEFORE STARTING ANY WORK.

2. THESE DRAWINGS SHOW THE GENERAL ARRANGEMENT OF PIPING, EQUIPMENT AND APPURTENANCES. FOLLOW DRAWINGS AS CLOSELY AS ACTUAL BUILDING CONSTRUCTION AND THE WORK OF OTHER TRADES WILL PERMIT. BECAUSE OF THE SMALL SCALE OF THE DRAWINGS, SOME OFFSETS, FITTINGS AND ACCESSORIES WHICH MAY BE REQUIRED HAVE NOT BEEN SHOWN. INVESTIGATE THE MECHANICAL, STRUCTURAL, ARCHITECTURAL AND FINISH CONDITIONS AFFECTING THE WORK AND ARRANGE THE WORK ACCORDINGLY.

3. CONTRACTOR SHALL NOT CUT ANY STRUCTURAL MEMBERS OF BUILDING WITHOUT PRIOR APPROVAL. COORDINATE HANGING OF EQUIPMENT WITH STRUCTURAL DRAWINGS

4. COORDINATE ALL VOLTAGES, PHASES AND CAPACITIES WITH ELECTRICAL PLANS.

5. ALL PIPES PENETRATING FLOORS IN MECHANICAL EQUIPMENT ROOMS SHALL BE PROVIDED WITH PIPE SLEEVES CAST IN PLACE EXTENDING 4 INCHES ABOVE THE FINISHED FLOOR. PIPES INSTALLED AFTER THE FLOOR IS POURED SHALL HAVE CONCRETE CURB 6 INCHES WIDE AND 4 INCHES HIGH PROVIDED. SEAL WATER TIGHT.

6. PROVIDE A UL THROUGH FIRE STOP PENETRATION SYSTEM FOR ALL PIPES THROUGH FIRE WALLS OR FLOORS. REFER TO ARCHITECTURAL PLANS TO VERIFY RATINGS (FIRE/SMOKE, SMOKE).

7. THE FIRE PROTECTION CONTRACTOR SHALL COORDINATE THE LOCATION AND QUANTITY OF ALL TAMPER AND WATER FLOW SWITCHES WITH THE FIRE ALARM CONTRACTOR. THE FIRE ALARM CONTRACTOR IS RESPONSIBLE FOR CONDUIT AND WIRING BETWEEN THE FIRE ALARM CONTROL PANEL/ENCLOSURE AND EACH TAMPER AND WATER FLOW SWITCH. THE FIRE ALARM CONTRACTOR SHALL PROVIDE ADDITIONAL ZONE MODULES REQUIRED AND TERMINATION OF ALL WIRING.

8. COORDINATE LOCATION OF HEADS W/ THE REFLECTED CEILING PLANS. HEADS IN LAY-IN TILE SHALL BE LOCATED WITHIN 2" OF THE CENTER OF THE TILE.

9. PROVIDE DRY SPRINKLER HEADS AND PIPING FOR PROTECTION IN AREAS THAT ARE SUBJECT TO FREEZING.

10. COORDINATE INSTALLATION WITH LOCAL AUTHORITIES AND PROVIDE ADDITIONAL COVERAGE AND EQUIPMENT AS REQUIRED TO MEET SPECIFIC REQUIREMENTS OF STATE AND LOCAL AUTHORITIES HAVING JURISDICTION.

11. PROVIDE SPRINKLER HEADS IN MECHANICAL ROOMS AND ELECTRICAL ROOMS, UNDER EQUIPMENT, DUCT WORK AND OTHER AREAS WHERE OBSTRUCTIONS OCCUR AS DEFINED BY NFPA 13.

12. PROVIDE SEISMIC MOVEMENT CONNECTORS BETWEEN ALL PIPING SUPPORTED BY SEISMICALLY PROTECTED BUILDING STRUCTURE AND PIPING SUPPORTED BY OTHER ELEMENTS. SEE SPECIFICATIONS FOR DESCRIPTION OF CONNECTORS.

13. PROVIDE SEISMIC BRACING PER NFPA 13 & ASCE 7-16.

14. PROVIDE SPRINKLER GUARDS IN AREAS WHERE UPRIGHT HEADS ARE EXPOSED TO PEDESTRIAN ACCESS(I.E. BELOW 7'-0" AFF IN TRAFFIC AREAS).

15. IN AREAS WITH EXPOSED STRUCTURE, ROUTE PIPING IN JOIST SPACE. COORDINATE WITH OTHER TRADES.

16. PAINT ALL EXPOSED SPRINKLER PIPING IN EXPOSED AREAS TO MATCH SURROUNDING FINISHES. PROVIDE ONE COAT OF PRIMER AND TWO COATS OF PAINT. COLOR TO BE APPROVED BY ARCHITECT. PROTECT VALVES & SPRINKLERS FROM PAINT.

17. SEE PROJECT SPECIFICATIONS FOR SCHEDULE OF SPRINKLER TYPE.

18. ALL PIPE HANGERS SHALL HAVE TIE-OFFS SECURING THE BEAM CLAMP TO THE STRUCTURE.

19. PROVIDE WITH RETARD CHAMBER, ELECTRIC AND WATER GONG ALARM BELLS ON WET SPRINKLER RISERS TO THE MAIN BUILDING.

20. PROVIDE TAMPER SWITCH ON YARD MOUNTED PIV. SEE CIVIL PLANS FOR LOCATION.

21. REFER TO THE PROJECT "FIRE SPRINKLER SYSTEM SPECIFICATION SHEET" FOR HAZARD CLASSIFICATION BY AREA AND SPRINKLER DESIGN PARAMETERS.

22. ACCESSORIES FOR EQUIPMENT THAT ARE LISTED ON SCHEDULE DRAWINGS ARE TO BE PROVIDED BY THE CONTRACTOR. THE ACCESSORIES ARE TO BE FURNISHED AND INSTALLED AS A COMPLETED OPERATING SYSTEM.

23. SEE STRUCTURAL PLANS FOR LINTEL REQUIREMENTS FOR PENETRATIONS THROUGH WALLS.

24. COORDINATE WORK WITH THAT OF ALL OTHER TRADES TO ELIMINATE INTERFERENCE'S. EXAMINE IN ADVANCE THE LOCATION OF ELECTRICAL SYSTEMS, DUCTS, PIPING, STRUCTURES, CONDUITS AND OTHER EQUIPMENT AND COMPONENTS TO BE INSTALLED AND PROPERLY COORDINATE THE INSTALLATION OF FIRE PROTECTION TO AVOID INTERFERENCE'S BEFORE FABRICATING AND INSTALLING WORK. DETERMINE ALL DIMENSIONS BY ACTUAL FIELD CONDITIONS, MEASUREMENTS FROM MANUFACTURER'S CERTIFIED PRINTS AND COORDINATION WITH OTHER TRADES AND TO MODIFY, OFFSET OR OTHERWISE ACCOMMODATE ALL EQUIPMENT TO THE STRUCTURE, UTILITIES AND OTHER EQUIPMENT.

25. SLEEVE AND SLEEVE SEALS ARE REQUIRED FOR FIRE PROTECTION PIPING PENETRATIONS THROUGH EXTERIOR CONCRETE WALLS ABOVE GRADE, EXTERIOR CONCRETE WALLS BELOW GRADE, CONCRETE SLABS ON GRADE, CONCRETE SLABS ABOVE GRADE AND INTERIOR PARTITIONS. REFER TO PROJECT SPECIFICATIONS.

26. INSTALL ALL EQUIPMENT PER MANUFACTURER'S INSTRUCTIONS. ALL SERVICE CLEARANCES SHALL BE MAINTAINED. NOTIFY OWNER AND ENGINEER PRIOR TO INSTALLATION IN WRITING OF ANY DEVIATIONS.

27. CONTRACTOR SHALL PROVIDE 1/4-INCH SCALE PROJECT SPECIFIC COORDINATION DRAWINGS. COORDINATION DRAWINGS AND PLANS AND OTHER DETAILS SHALL BE DRAWN TO SCALE, ON WHICH THE FOLLOWING ITEMS ARE SHOWN AND COORDINATED WITH EACH OTHER, USING INPUT FROM INSTALLERS OF THE ITEMS INVOLVED INCLUDING BUT NOT LIMITED TO: MECHANICAL EQUIPMENT, DUCTWORK, INSULATION, ALL PIPING, ELECTRICAL DISCONNECTS, ETC. COORDINATION DRAWINGS SHALL INCLUDE ALL MANUFACTURERS REQUIRED CLEARANCES AS WELL AS CODE REQUIRED CLEARANCES.

28. CONTRACTOR SHALL MAKE ALL NECESSARY TESTS, TRIAL OPERATIONS, ETC. REQUIRED TO PROVE THAT ALL SYSTEMS ARE IN COMPLETE SERVICEABLE CONDITION AND WILL FUNCTION AS INTENDED. ADJUST FLUSH VALVES TO PROVIDE MINIMUM FLOW CAPABLE OF CLEANSING BOWLS. ALL COSTS OF TEST SHALL BE BORNE BY THIS CONTRACTOR, SHOULD TEST REVEAL ANY DEFECTIVE MATERIAL OR WORKMANSHIP, SUCH WORK SHALL BE REPLACED AND TESTS REPEATED. ALL CORRECTIONS SHALL BE MADE USING NEW MATERIALS. CONTRACTOR SHALL TEST PIPING AND PLUMBING SYSTEMS TO THE PRESSURES INDICATED IN SECTION 312 OF THE INTERNATIONAL PLUMBING CODE AND MAINTAIN PRESSURE FOR THE DURATION INDICATED.

29. SEE STRUCTURAL PLANS FOR LOCATIONS OF BUILDING EXPANSION AND SEISMIC JOINTS. PROVIDE A METRAFLEX FIRE LOOP SEISMIC EXPANSION JOINT FOR PIPING THAT CROSSES JOINTS.

ssoe®

S&W

PROFESSIONAL SEALS:

SOUTH CAROLINA CERTIFICATE OF AUTHORIZATION SSOE, INC No. 746

SOUTH CAROLINA PROFESSIONAL ENGINEER 8/6/21 NO. 25453 WESLEY G. BROWN

CONSULTANTS:

SUBMITTAL/REVISION SCHEDULE:

NO.	DATE	DESCRIPTION
	08.06.2021	CONSTRUCTION DOCUMENTS

■ APPROVED FOR CONSTRUCTION
□ NOT APPROVED FOR CONSTRUCTION

CLIENT INFORMATION:

SOUTH CAROLINA EDUCATION LOTTERY

South Carolina Education Lottery®

CLIENT PROJECT #:	20048.00
SCEL PROJECT #:	Y20-N001-CB

PROJECT INFORMATION:

4TH FLOOR UPFIT

1333 MAIN STREET
COLUMBIA, SC 29201

SSOE/SW PROJECT #:	021-00531-00
SSOE/SW MANAGER:	WESLEY BROWN

SSOE | STEVENS & WILKINSON
1501 Main Street, Suite 730
Columbia, SC 29201
T. (803) 765-0320

THIS DRAWING IS THE PROPERTY OF SSOE | STEVENS & WILKINSON. UNAUTHORIZED USE OF ANY KIND, INCLUDING USE ON OTHER PROJECTS, IS PROHIBITED.
© SSOE, INC. 2021

FIRE PROTECTION GENERAL

F0.01

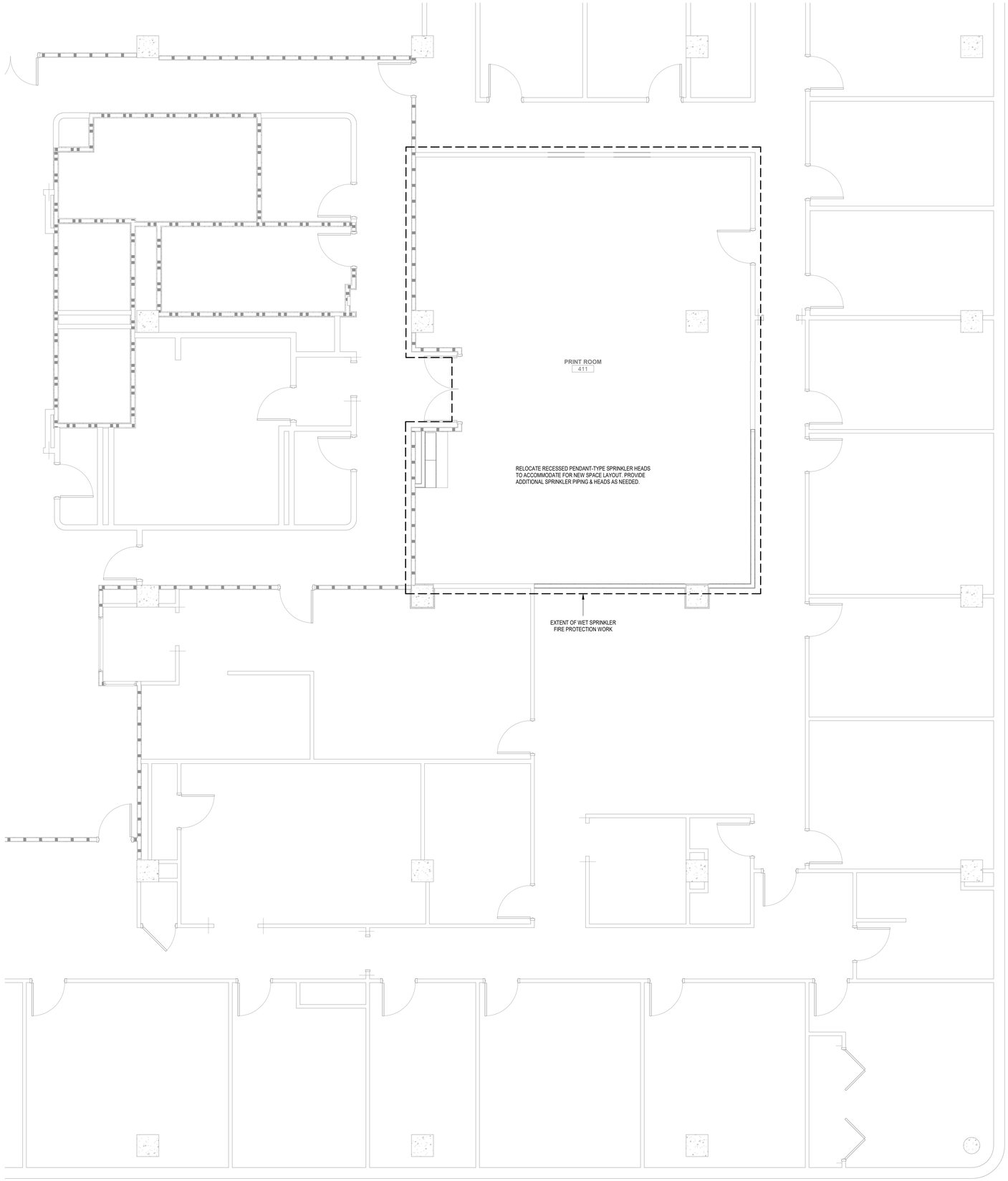

1 LEVEL 4 FIRE PROTECTION PLAN
1/4" = 1'-0"
0 2' 4' 8'

TRUE NORTH
PROJECT NORTH

SSOE
S&W

PROFESSIONAL SEALS:

SOUTH CAROLINA
SSOE, INC
No. 746
CERTIFICATE OF AUTHORIZATION

SOUTH CAROLINA
PROFESSIONAL ENGINEER
NO. 25453
8/6/21
WESLEY G. BROWN

CONSULTANTS:

SUBMITTAL/REVISION SCHEDULE:

NO.	DATE	DESCRIPTION
	08.06.2021	CONSTRUCTION DOCUMENTS

■ APPROVED FOR CONSTRUCTION
□ NOT APPROVED FOR CONSTRUCTION

CLIENT INFORMATION:

SOUTH CAROLINA EDUCATION LOTTERY

South Carolina Education Lottery®

CLIENT PROJECT #:	20048.00
SCEL PROJECT #:	Y20-N001-CB

PROJECT INFORMATION:

4TH FLOOR UPFIT

1333 MAIN STREET
COLUMBIA, SC 29201

SSOE/SW PROJECT #:	021-00531-00
SSOE/SW MANAGER:	WESLEY BROWN

SSOE | STEVENS & WILKINSON
1501 Main Street, Suite 730
Columbia, SC 29201
T. (803) 765-0320

THIS DRAWING IS THE PROPERTY OF SSOE | STEVENS & WILKINSON. UNAUTHORIZED USE OF ANY KIND, INCLUDING USE ON OTHER PROJECTS, IS PROHIBITED.

© SSOE, INC. 2021.

LEVEL 4 FIRE PROTECTION PLAN

F1.41

C:\Autodesk\Revit\2004800 - Mech - SC Education Lottery Upfit - Adjusted Scope - V19.2_cwilkes@ssoe.com.rvt **:FILE PATH**
10/20/2021 3:21:21 PM **:PRINT DATE**

SOUTH CAROLINA EDUCATION LOTTERY

4TH FLOOR UPFIT

SOUTH CAROLINA EDUCATION LOTTERY PROJECT NUMBER: 20048.00
SSOE | S&W PROJECT NUMBER: 021-00531-00

SSOE | STEVENS & WILKINSON

PROFESSIONAL SEALS:

SOUTH CAROLINA SSOE, INC No. 746 CERTIFICATE OF AUTHORIZATION

STATE OF SOUTH CAROLINA WILLIAM J. FLEMING Columbia, SC No. 3452 REGISTERED ARCHITECT

8-6-2021

SUBMITTAL/REVISION SCHEDULE:

NO.	DATE	DESCRIPTION
	8.06.2021	CONSTRUCTION DOCUMENTS

■ APPROVED FOR CONSTRUCTION
☐ NOT APPROVED FOR CONSTRUCTION

CLIENT INFORMATION:

SOUTH CAROLINA EDUCATION LOTTERY

CLIENT PROJECT #:	20048.00
SCEL PROJECT #:	Y20-N001-CB

PROJECT INFORMATION:

4TH FLOOR UPFIT

1333 MAIN STREET, COLUMBIA, SOUTH CAROLINA

SSOE/SW PROJECT #:	021-00531-00
SSOE/SW MANAGER:	BILL FLEMING

SSOE | STEVENS & WILKINSON
1501 Main Street, Suite 730
Columbia, SC 29201
T. (803) 765-0320

THIS DRAWING IS THE PROPERTY OF SSOE | STEVENS & WILKINSON. UNAUTHORIZED USE OF ANY KIND, INCLUDING USE ON OTHER PROJECTS, IS PROHIBITED.
© SSOE, INC. 2021

COVER SHEET

G1.00

ABBREVIATIONS LEGEND

A

AB	ANCHOR BOLT
AC	AIR CONDITIONING
ACC	ACCESSIBLE
ACOUS	ACOUSTICAL
AD	AREA DRAIN
ADA	AMERICANS W/ DISABILITIES ACT
ADD	ADDITIONAL
ADJ	ADJUSTABLE
AFF	ABOVE FINISH FLOOR
AFG	ABOVE FINISH GRADE
AGGR	AGGREGATE
ALT	ALTERNATE
ALUM	ALUMINUM
ANNO	ANODIZED
APC	ACOUSTICAL PANEL CEILING
APPD	APPROVED
APPROX	APPROXIMATE(LY)
ARCH	ARCHITECTURAL
ASPH	ASPHALT
ATC	ACOUSTICAL TILE CEILING
AUTO	AUTOMATIC
AV	AUDIO VISUAL

B

BEJ	BRICK EXPANSION JOINT
BD	BOARD
BLKG	BLOCKING
BLDG	BUILDING
BFF	BETWEEN FINISH FACES
B.M.	BENCH MARK
BOT	BOTTOM
B.R.	BUMPER RAIL
BSMT	BASEMENT
BUR	BUILT UP ROOF
B/W	BETWEEN

C

CAB	CABINET
CAT	CATEGORY
CB	CATCH BASIN
CBU	CEMENTITIOUS BACKER UNIT
CC	CENTER TO CENTER
CER	CERAMIC
CFCI	CONTRACTOR FURNISHED, CONTRACTOR INSTALLED
CFOI	CONTRACTOR FURNISHED, OWNER INSTALLED
C.G.	CORNER GUARD
CHAN	CHANNEL
C.I.	CAST IRON
CIP	CAST-IN-PLACE
CJ	CONTROL JOINT (CONSTRUCTION JOINT)
C.L.	CENTER LINE
CLG	CEILING
CLK BD	CHALK BOARD
CLR	CLEAR
CMU	CONCRETE MASONRY UNIT
CNTR	COUNTER
C.O.	CLEAN OUT
COL	COLUMN
CONC	CONCRETE
CONT	CONTINUOUS
COORD	COORDINATION
CORR	CORRIDOR
CR	CARD READER
CR-X	CARD READER A, B, C, ETC
CPT	CARPET
CT	CERAMIC TILE
CT	COOLING TOWER
CTR	CENTER
CTSK	COUNTERSUNK
CW	COLD WATER (PIPING)

D

D	DEEP
D.A.	DOUBLE ACTING
DBL	DOUBLE
DEG	DEGREE
DEMO	DEMOLITION
DEPT	DEPARTMENT
DETL	DETAIL
DF	DRINKING FOUNTAIN
DIA	DIAMETER
DIFF	DIFFUSER
DIM	DIMENSION
DIS	DISABLED
DISP	DISPENSER
DMPF	DAMPPROOFING
DMS	DOOR MONITORING SWITCH
DMT	DEMOUNTABLE
D.O.	DOOR OPENING
D.P.	DIMENSION POINT
DPTN	DEMOUNTABLE PARTITION
DR	DOOR
DRN	DRAIN
DS	DOWNSPOUT
DW	DISHWASHER
DWG	DRAWING
DWR	DRAWER

E

EA	EACH
E.B.	EXPANSION BOLT
EIFS	EXTERIOR INSULATION AND FINISH SYSTEM
EFS	EXTERIOR FINISH SYSTEM
EJ	EXPANSION JOINT
EL	ELECTRIC LATCH RETRACTION
ELEC	ELECTRICAL
ELEV	ELEVATION
ELVTR	ELEVATOR
EMERG	EMERGENCY
ENCLO	ENCLOSURE
E.P.	ELECTRICAL PANELBOARD
EQ	EQUAL
EQUIP	EQUIPMENT
ESCAL	ESCALATOR
EPDM	SINGLE PLY ROOF
EWC	ELECTRIC WATER COOLER
EXH	EXHAUST
EXIST	EXISTING
EXP	EXPANSION
EXP JT	EXPANSION JOINT
EXT STF	EXTERIOR STOREFRONT
EXT	EXTERIOR

F

FA	FIRE ALARM
FB	FACE BRICK
F.C.	FURRED CEILING
F.D.	FLOOR DRAIN
FDC	FIRE DEPARTMENT CONNECTION
FE	FIRE EXTINGUISHER
FEC	FIRE EXTINGUISHER CABINET
FF	FACTORY FINISH
F.F.L.	FINISHED FLOOR LINES
F.F.E.	FINISHED FLOOR ELEVATION
FF&E	FURNITURE, FINISHES & EQUIPMENT
F.H.	FLAT HEAD
F.H.C.	FIRE HOSE CABINET
FIN	FINISHED
FIXT	FIXTURE
FL	FLOOR
FLASH	FLASHING
FLG	FLOORING
FLUOR	FLUORESCENT
FND	FOUNDATION
F.O.F.	FACE OF FINISH
F.O.M.	FACE OF MASONRY
F.O.S.	FACE OF STUD
FP	FIRE PROTECTION
FR	FRAME
FPG	FIREPROOFING
FRTW	FIRE RETARDANT TREATED WOOD
FT	FEET
FTG	FOOTING
FURN	FURNITURE
FURR	FURRING
FV	FIELD VERIFY
FWC	FABRIC WALLCOVERING
FWP	FABRIC WRAPPED PANEL

G

GA	GAUGE
GALV	GALVANIZED
G.B.	GRAB BAR
GC	GENERAL CONTRACTOR
GFRC	GLASS FIBER REINFORCED CONCRETE
GFRG	GLASS FIBER REINFORCED GYPSUM
GL	GLASS
GL BLK	GLASS BLOCK
GWB	GYPSUM WALL BOARD
GYP	GYPSUM

H

H	HIGH
HB	HOSE BIB
HCW	HOLLOW CORE WOOD
HC	HANDICAPPED
HDW	HARDWARE
HDWD	HARDWOOD
HGT	HEIGHT
HM	HOLLOW METAL
HNDRL	HANDRAIL
H.O.	HOLD OPEN
HORZ	HORIZONTAL
HRC	HOSE REEL CABINET
HR	HOUR
HS	HEAT STRENGTH (GLASS)
HVAC	HEATING, VENTILATION AND AIR CONDITIONING
HW	HOT WATER
HWH	HOT WATER HEATER
HYDR	HYDRAULIC

I

IBC	INTERNATIONAL BUILDING CODE
ID	INSIDE DIAMETER
IN	INCH
INCAND	INCANDESCENT
INCL	INCLUDED (INCLUDING)
INFO	INFORMATION
INSUL	INSULATION
INT	INTERIOR
INT STF	INTERIOR STOREFRONT
INTERM	INTERMEDIATE
INV	INVERT (INVERSE)
IPS	INTERNATIONAL PIPE STANDARD
IRMA	INVERTED ROOF MEMBRANE

J

JAN CLO	JANITOR CLOSET
J-BOX	JUNCTION BOX
JST	JOIST
JT	JOINT

K

K	KIP (1000 LBF)
K.D.	KNOCKED DOWN
KG	KILOGRAM
KIT	KITCHEN
K.O.	KNOCKOUT
KPL	KICK PLATE

L

L	LONG
LAB	LABORATORY
LAHJ	LOCAL AUTHORITY HAVING JURISDICTION
LAM	LAMINATE (LAMINATION)
LAU	LAUNDRY
LAV	LAVATORY
LB	POUND
LD	LEADER
LDG	LANDING
LEV	LEVEL
LF	LINEAR FOOT
LGT	LIGHT
LKR	LOCKER
LLH	LONG LEG HORIZONTAL
LLV	LONG LEG VERTICAL
LN	LINE
LS	LIMESTONE
LV	LOUVER
LWC	LIGHTWEIGHT CONCRETE

M

M	METER
MACH	MACHINE
MAINT	MAINTENANCE
MAS	MASONRY
MATL	MATERIAL
MAX	MAXIMUM
M.B.	MACHINE BOLT
MBL	MARBLE
M.C.	MAIL CHUTE
MDF	MEDIUM DENSITY FIBERBOARD
MDO	MEDIUM DENSITY OVERLAY
MECH	MECHANICAL
MED CAB	MEDICINE CABINET
MEMB	MEMBRANE
MEP	MECHANICAL, ELECTRICAL, PLUMBING
MEZZ	MEZZANINE
MFR	MANUFACTURER
MH	MANHOLE
MHO	MAGNETIC HOLD OPEN DEVICE
MIN	MINIMUM
MISC	MISCELLANEOUS
ML	MAGNETIC LOCK
MM	MILLIMETER
M.O.	MASONRY OPENING
MOV PART	MOVING PARTITION
M.S.	MACHINE SCREW
M.S.L.	MEAN SEA LEVEL
MTD	MOUNTED
MTG	MOUNTING
MTL	METAL
MULL	MULLION

N

N	NORTH
N/A	NOT APPLICABLE
NC	NOISE CRITERIA
NECC	NATIONAL ENERGY CONSERVATION CODE
NEC	NATIONAL ELECTRICAL CODE
NFPA	NATIONAL FIRE PROTECTION ASSOCIATION
NIC	NOT IN CONTRACT
NO	NUMBER
NOM	NOMINAL
NTS	NOT TO SCALE

O

OA	OUTSIDE AIR
OC	ON CENTER
OCEW	ON CENTER EACH WAY
O.D.	OUTSIDE DIAMETER/DIMENSION
OFCI	OWNER FURNISHED, CONTRACTOR INSTALLED
OFF	OFFICE
OFOI	OWNER FURNISHED, OWNER INSTALLED
OH	OPPOSITE HAND
OPNG	OPENING
OPP	OPPOSITE
ORD	OVERFLOW ROOF DRAIN
OUTS	OUTSIDE
OVHD	OVERHEAD

P

PAV	PAVING
PARTN	PARTITION
PATD	PAPER TOWEL DISPENSER
PBD	PARTICLEBOARD
P.C.	PRECAST CONCRETE
PDF	POWER DRIVE FASTENER
PDO	POWER DOOR OPERATOR
PERF	PERFORATED
PERIM	PERIMETER
PERP	PERPENDICULAR
PF	POINT OF INTERSECTION
PL	PLATE
PLAM	PLASTIC LAMINATE
PLAS	PLASTER
PLBG	PLUMBING
PLF	POUNDS PER LINER FOOT
PLYWD	PLYWOOD
PNL	PANEL
PNT	PAINT
POL	POLISHED
PORT	PORTABLE
PR	PAIR
PRCST	PRECAST
PREFAB	PREFABRICATED
PROJ	PROJECT
PSF	POUNDS PER SQUARE FOOT
PT	PORCELAIN TILE/ PAVER TILE
PTD	PAINTED
PTN	PARTITION
PTR	PAPER TOWEL RECEPTACLE

Q

QT	QUARRY TILE
QTY	QUANTITY

R

R	RADIUS
RA	RETURN AIR
RAD	RADIUS
RB	RUBBER BASE (RESILIENT BASE)
RCP	REFLECTED CEILING PLAN
R.D.	ROOF DRAIN
REC	RECESSED
RECOM	RECOMMENDED
RECPT	RECEPTACLE
REF	REFERENCE
REFL	REFLECTIVE
REFRG	REFRIGERATOR
REG	REGISTER
REINF	REINFORCING
REL	RELOCATE
REM	REMOVABLE
REQ	REQUIRED /REQUIRED
RESIL	RESILIENT
REV	REVISION
RF	ROOF
RM	ROOM
R.O.	ROUGH OPENING
RTD	RATED
RTG	RATING
RUB	RUBBER
RWL	RAIN WATER LEADER
RX	REQUEST TO EXIT SWITCH

S

S	SOUTH
SA	SUPPLY AIR
SAN	SANITARY
SB	SPLASHBLOCK
SCUP	SCUPPER
S.C.	SOLID CORE
SCHED	SCHEDULE
SCW	SOLID CORE WOOD
SD	STORM DRAIN
SD	SOAP DISPENSER
SECT	SECTION
SF	SQUARE FEET / SQUARE FOOT
SH	SPRINKLER HEAD
SHTHG	SHEATHING
SHT	SHEET
SHR	SHOWER
SIM	SIMILAR
S.M.	SHEET METAL
SND	SANITARY NAPKIN DISPENSER
SP	STANDPIPE
SPEC	SPECIFICATION
SPR	SPRINKLER
SPKR	SPEAKER
SQ	SQUARE
SQ FT	SQUARE FOOT
SF	SQUARE FOOT
SS	STAINLESS STEEL
SSE	STRUCTURE SLAB ELEVATION
SST	STAINLESS STEEL
SSK	SERVICE SINK
STA	STATION
ST	STREET
STD	STANDARD
STL	STEEL
STL JST	STEEL JOIST
STL ST	STAINLESS STEEL
STN	STAINED
STS	SELF TAP METAL SCREW
STOR	STORAGE
STRL	STRUCTURAL
STRUC	STRUCTURAL
STS	SELF TAP METAL SCREW
SUBCAT	SUBCATEGORY
SUSP	SUSPENDED
SYMM	SYMMETRICAL
SYS	SYSTEM

T

T	THERMOSTAT
TB	TOWEL BAR
T.C.	TOP OF CURB
TEL	TELEPHONE
TEMP	TEMPERATURE
TER	TERRAZZO
TFF	TO FINISH FACE
TGB	TOGGLE BOLT
THK	THICK/THICKNESS
THRES	THRESHOLD
THRU	THROUGH
TKBD	TACKBOARD
TLT	TOILET
TMPD	TEMPERED
T.O.	TOP OF
T.O.P.	TOP OF PARAPET
T.O.M.	TOP OF MASONRY
T.O.C.	TOP OF CMU
T.O. CONC	TOP OF CONCRETE
T.O.S.	TOP OF SLAB
T.O.STL	TOP OF STEEL
T.O.W.	TOP OF WALL
TPD	TOILET PAPER DISPENSER
TRACT	TRACTION
TRT	TREATED
TV	TELEVISION
T.W.	TOP OF WALL
TYP	TYPICAL

U

UL	UNDERWRITER'S LABORATORY
UNFIN	UNFINISHED
U.O.N.	UNLESS OTHERWISE NOTED
U.N.O.	UNLESS NOTED OTHERWISE
UR	URINAL

V

VAC	VENTILATION AND AIR CONDITIONING
VAC	VACUUM
V.B.	VAPOR BARRIER
VCT	VINYL COMPOSITION TILE
VERT	VERTICAL
VEST	VESTIBULE
VIF	VERIFY IN FIELD
VT	VINYL TILE
VR	VAPOR RETARDER
VWC	VINYL WALL COVERING

W

W	WIDE
W/	WITH
W/O	WITHOUT
WAT HTR	WATER HEATER
WC	WATER CLOSET
WD	WOOD
WDS	WOOD SCREW
WD DR	WOOD DOOR
WDW	WINDOW
W.F.	WIDE FLANGE STEEL
WGT	WEIGHT
W.GL	WIRE GLASS
W.H	WEEP HOLE
W.I.	WROUGHT IRON
WIN	WINDOW
W.L.	WATER LINE
WP	WATERPROOFING
WPM	WATERPROOFING MEMBRANE
WPT	WORK POINT
WR	WATER RESISTANT/REPELLANT
WS	WEATHERSTRIPPING
WSCT	WAINSCOT
W.W.	WALL TO WALL
W.W.M.	WELDED WIRE MESH

GENERAL NOTES

1. THE CONTRACT DOCUMENTS CONSIST OF THIS SET OF DRAWINGS, THE PROJECT MANUAL, ADDENDA, CONSTRUCTION CHANGE DIRECTIVES, CHANGE ORDERS, THE CONTRACT BETWEEN THE OWNER AND THE CONTRACTOR, CONDITIONS OF THE CONTRACT AND ANY OTHER INFORMATION WRITTEN AND MUTUALLY AGREED UPON BETWEEN THE OWNER AND THE CONTRACTOR.
2. THIS SET OF DRAWINGS HAS AN ACCOMPANYING PROJECT MANUAL, WHICH IS AN INTEGRAL PART OF THE CONTRACT DOCUMENTS. ALL ASPECTS OF THESE DRAWINGS ARE DEPEND ON THE INFORMATION CONTAINED THEREIN.
3. THESE DRAWINGS ARE COMPLEMENTARY AND INTERRELATED: WORK OF ANY INDIVIDUAL TRADE IS NOT NECESSARILY CONFINED TO SPECIFIC DOCUMENTS, CHAPTERS OR LOCATIONS.
4. NOTES AND DETAILS ON DRAWINGS SHALL TAKE PRECEDENCE OVER GENERAL NOTES AND TYPICAL DETAILS.
5. WHERE DETAILS ARE SHOWN ON ARCHITECTURAL DRAWINGS FOR ONE CONDITION, IT SHALL APPLY TO ALL SIMILAR OR LIKE CONDITIONS, UNLESS NOTED OR SHOWN OTHERWISE ON THE PLANS.
6. APPROVED PLANS SHALL BE KEPT IN A PLAN BOX AND SHALL NOT BE USED BY WORKMEN. ALL CONSTRUCTION SETS SHALL REFLECT THE SAME INFORMATION. THE CONTRACTOR SHALL ALSO MAINTAIN, IN GOOD CONDITION, ONE COMPLETE SET OF DRAWINGS WITH ALL REVISIONS, ADDENDA AND CHANGE ORDERS ON THE PREMISES AT ALL TIMES. THERE ARE TO BE UNDER THE CARE OF THE JOB SUPERINTENDENT.
7. CONTRACTOR SHALL COORDINATE ALL CIVIL DOCUMENTS INCLUDED IN THIS SET WITH EXISTING SITEWORK CONDITIONS AND REPORT ANY DISCREPANCIES IN THE DOCUMENTS TO THE ARCHITECT.
8. IF DISCREPANCIES OR INCONSISTENCIES IN THE DOCUMENTS ARE DISCOVERED, NOTIFY THE ARCHITECT IMMEDIATELY USING THE DESIGNATED "REQUEST FOR INFORMATION" PROCEDURE AS SPECIFIED IN THE PROJECT MANUAL.
9. ALL DIMENSIONS TO TAKE PRECEDENCE OVER SCALE SHOWN ON PLANS, SECTIONS AND DETAILS.
10. DO NOT SCALE THE DRAWINGS; USE DIMENSIONS ONLY. NOTIFY ARCHITECT OF SIGNIFICANT DISCREPANCIES IMMEDIATELY UPON DISCOVERY.
11. THESE DOCUMENTS MAY CONTAIN 3-D AXON AND AERIAL IMAGES FOR PROJECT ORIENTATION. THESE IMAGES MAY NOT ACCURATELY REFLECT ALL PROVISION OF THE CONTRACT DOCUMENTS. THESE IMAGES ARE ARTISTIC IN NATURE AND DO NOT TAKE PRECEDENCE OVER NOTES, DIMENSION OR DETAILS SHOWN AT THESE DOCUMENTS.
12. IT IS THE INTENT OF THE CONTRACT DOCUMENT TO COMPLY WITH ALL CODES AND ORDINANCES IN EFFECT AT THE TIME THE PERMIT IS ISSUED. NOTIFY ARCHITECT IMMEDIATELY UPON DISCOVERY OF SUSPECTED DEVIATION.
13. ALL UL AND ASTM STANDARDS NOTED ON THESE DRAWINGS SHALL BE OF THE LATEST REVISION UNLESS NOTED OTHERWISE.
14. EQUIVALENT MATERIALS SUBSTITUTED AS PER "APPROVED EQUAL" NOTE SHALL BE APPROVED BY THE ARCHITECT/ENGINEER OF RECORD BEFORE ACCEPTANCE OF BID BY GENERAL CONTRACTOR. ANY MATERIAL DESIGNATED WITH A BRAND NAME MAY BE SUBSTITUTED WITH IT'S EQUAL IF THE SO CALLED EQUIVALENT IS FIRST APPROVED BY THE ARCHITECT/ENGINEER. THE CONTRACTOR SHALL SUPPLY INFORMATION AS REQUESTED TO VERIFY MATERIAL IS EQUAL TO SPECIFIED MATERIAL. SEE SPECIFICATIONS FOR APPROPRIATE PROTOCOLS FOR REVIEW OF SUBSTITUTION REQUESTS.
15. REVIEW OF SUBMITTALS AND/OR SHOP DRAWINGS BY THE ARCHITECT/ENGINEER OF RECORD DOES NOT RELIEVE THE CONTRACTOR OF THE SOLE RESPONSIBILITY TO REVIEW AND CHECK SHOP DRAWINGS BEFORE SUBMITTAL TO THE ARCHITECT/ENGINEER OF RECORD. THE CONTRACTOR REMAINS SOLELY RESPONSIBLE FOR ERRORS AND OMISSIONS ASSOCIATED WITH THE PREPARATION OF SHOP DRAWINGS AS THEY PERTAIN TO MEMBER SIZES, DETAILS, AND DIMENSIONS SPECIFIED IN THE CONTRACT DOCUMENTS. CONTRACTOR SHALL ALSO BE RESPONSIBLE FOR MEANS, METHODS, TECHNIQUES, SEQUENCES, AND PROCEDURES OF CONSTRUCTION. SEE SPECIFIC PROVISIONS IN THE CONTRACT DOCUMENTS SPECIFICATIONS DEALING WITH THE APPROPRIATE DESIGN RESPONSIBILITIES OF CONTRACTORS, SUBCONTRACTORS AND SUPPLIERS.
16. CONTRACTOR SHALL PROVIDE PROJECT SIGNAGE INCLUDING RENDERING OF BUILDING, NAME OF OWNER, ARCHITECT, ENGINEER AND MAJOR SUB-CONTRACTORS.
17. THE DESIGN OF PRE-ENGINEERED SYSTEMS SPECIFIED IN THE CONTRACT DOCUMENTS IS THE SOLE RESPONSIBILITY OF THE CONTRACTOR, SUPPLIER AND ITS DESIGN ENGINEER LICENSED IN THE PROJECT STATE. SUBMITTAL OF SUCH SYSTEMS TO THE ARCHITECT/ENGINEER OF RECORD SHALL BE REVIEWED FOR CONFORMANCE WITH THE CONTRACT DOCUMENTS WITH REGARD TO THE ARRANGEMENT AND OR SIZES OF MEMBERS SHOWN ON THE CONTRACT DOCUMENTS, AND THE SUPPLIERS INTERPRETATION OF THE DESIGN INFORMATION INCLUDED IN THE CONTRACT DOCUMENTS. SUCH REVIEW BY THE ARCHITECT/ENGINEER OF RECORD SHALL NOT IMPLY ANY RESPONSIBILITY FOR THE ACTUAL DESIGN OF SUCH SYSTEMS. THE CONTRACTOR SHALL BE RESPONSIBLE FOR DIMENSIONAL ACCURACY AND CONFORMANCE WITH THE INFORMATION CONTAINED WITHIN THE CONTRACT DOCUMENTS. SEE SPECIFIC SECTIONS OF GENERAL NOTES ABOVE AND THE SPECIFICATIONS FOR APPROPRIATE DESIGN RESPONSIBILITIES OF THE SUPPLIER AND IT'S LICENSED ENGINEER.
18. FIRE ALARM, SPRINKLER SYSTEMS, AND KITCHEN HOOD FIRE EXTINGUISHING SYSTEMS SHALL BE SUBMITTED AND APPROVED BY THE FIRE MARSHALL'S OFFICE HAVING JURISDICTION PRIOR TO INSTALLATION.
19. ALL EQUIPMENT, SPECIALTIES, FURNISHINGS AND CASEWORK INDICATED ON THE DOCUMENTS SHALL BE INCLUDED IN THE CONTRACT UNLESS SPECIFICALLY INDICATED TO NOT BE IN THE CONTRACT (N.I.C.).
20. ALL TRAILER AND/OR CONSTRUCTION OFFICES SHALL BE PERMITTED SEPARATELY FROM BUILDING PERMIT. PERMITS SHALL BE PURCHASED BY THE GENERAL CONTRACTOR FROM THE AUTHORITY HAVING JURISDICTION. THE COST OF PERMITS SHALL BE INCLUDED IN THE CONTRACT COST.
21. MECHANICAL, PLUMBING AND ELECTRICAL SUBCONTRACTORS SHALL SUBMIT AFFIDAVITS FOR EACH BUILDING PERMIT TO THE BUILDING PERMITS SECTION BEFORE REQUESTING INSPECTIONS. OBTAIN AFFIDAVITS FROM THE BUILDING PERMITS SECTION.
22. IT IS THE INTENT OF THESE DOCUMENTS THAT ALL ITEMS, EQUIPMENT, HARDWARE, CLEARANCES, MOUNTING HEIGHTS, SIGNAGE, SYSTEMS, ETC BE IN COMPLIANCE WITH THE AMERICANS WITH DISABILITIES ACT. THE GENERAL CONTRACTOR AND SUBCONTRACTORS SHALL REPORT TO THE ARCHITECT ANY DISCREPANCIES NOTED BETWEEN THE REQUIREMENTS OF THE ACT AND THE DOCUMENTS AND WAIT FOR DIRECTIONS ON THE RESOLUTION OF THE DISCREPANCIES.
23. EXTERIOR SIGNAGE LOCATIONS, NUMBER, SIGN AND DESIGN ARE NOT APPROVED UNDER THIS BUILDING PERMIT. A SEPARATE SIGN LOCATION PERMIT IS REQUIRED FOR EACH SIGN.
24. FOR REASONS OF DRAWING CLARITY, DRAWINGS DRAWN AT A SCALE GREATER THAN 1 1/2" = 1'-0" DO NOT SHOW SPRAY-ON FIREPROOFING AND MAY ALSO NOT BE SHOWN AT THESE DETAILS FOR CLARITY OF DRAWING. INSTALL FIREPROOFING ON ALL STRUCTURAL ELEMENTS AS REQUIRED BY GENERAL FIREPROOFING INFORMATION REGARDLESS OF WHETHER IT IS SHOWN IN A PARTICULAR DETAIL. SEE CODE ANALYSIS SHEETS FOR MORE INFORMATION.
25. THE CONTRACTOR IS RESPONSIBLE FOR LOCATING ALL EXISTING UTILITIES, WHETHER OR NOT THEY ARE SHOWN. CONTRACTOR SHALL PROTECT FROM DAMAGE, ALL EXISTING UTILITIES. THE CONTRACTOR SHALL BEAR THE EXPENSE OF REPAIR OR REPLACEMENT OF UTILITIES AND OTHER PROPERTY DAMAGED BY OPERATIONS IN CONJUNCTION WITH THE EXECUTION OF THE WORK.
26. THE CONTRACTOR SHALL PROVIDE ALL TEMPORARY WATER, POWER AND TOILET FACILITIES AS REQUIRED.
27. THE CONTRACTOR SHALL BE RESPONSIBLE FOR THE COMPLETE SECURITY OF THE SITE, WHILE CONSTRUCTION IS IN PROGRESS AND UNTIL JOB IS COMPLETE.
28. CONTRACTOR SHALL TAKE ALL NECESSARY PRECAUTIONS TO ENSURE THE SAFETY OF THE OCCUPANTS AND WORKERS AT ALL TIMES.
29. CONSTRUCTION TECHNIQUES, PROCEDURES, SEQUENCING AND SCHEDULING ARE SOLELY THE RESPONSIBILITY OF THE CONTRACTOR.
30. FIRE ALARM CONTRACTOR SHALL OBTAIN A FIRE ALARM SYSTEM PERMIT PRIOR TO INSTALLATION. ANY FIRE ALARM PLANS INCLUDED IN THIS SET OF PLANS ARE FOR REFERENCE ONLY. NOT FOR PERMIT.
31. FIRE SPRINKLER CONTRACTOR SHALL OBTAIN A FIRE SPRINKLER PERMIT PRIOR TO INSTALLATION. ANY FIRE SPRINKLER PLANS INCLUDED IN THIS SET OF PLANS ARE FOR REFERENCE ONLY. NOT FOR PERMIT.
32. ELEVATORS AND ESCALATORS SHALL BE DESIGNED FOLLOWING REQUIREMENTS OF ANSI/ASME A17.1, THE LIFE SAFETY CODE (CHAPTERS 7-4) IN EFFECT IN THE JURISDICTION HAVING AUTHORITY.

INDEX OF DRAWINGS

SHEET NUMBER	SHEET NAME
GENERAL INFORMATION	
G1.00	COVER SHEET
G1.02	GENERAL NOTES & SHEET INDEX
G2.00	CODE ANALYSIS
G3.40	LEVEL 4 LIFE SAFETY & OCCUPANT LOAD PLANS
ARCHITECTURAL DEMOLITION	
AD1.41	LEVEL 4 DEMOLITION PLAN
AD6.41	LEVEL 4 DEMOLITION REFLECTED CEILING PLAN
ARCHITECTURE	
A0.50	PARTITION TYPES & DETAILS
A1.40	4TH FLOOR OVERALL PLAN
A1.41	LEVEL 4 FLOOR PLAN
A5-00A	ANSI ADA ACCESSIBLE DETAILS
A6.40	LEVEL 4 OVERALL REFLECTED CEILING PLAN
A6.41	LEVEL 4 REFLECTED CEILING PLAN
A9.40	LEVEL 4 FINISH FLOOR OVERALL PLAN
A9.41	LEVEL 4 FINISH FLOOR PLAN
A10.01	MILLWORK SECTIONS & DETAILS
FIRE PROTECTION	
F0-01	FIRE PROTECTION GENERAL
F1-41	LEVEL 4 FIRE PROTECTION PLAN
PLUMBING	
P0-01	PLUMBING GENERAL
P1-41	LEVEL 4 PLUMBING PLAN
P4-01	PLUMBING SCHEDULES & DETAILS
MECHANICAL	
M0-01	HVAC GENERAL
M1-41	LEVEL 4 HVAC PLAN
M5-01	HVAC DETAILS
M6-01	HVAC SCHEDULES
ELECTRICAL DEMOLITION	
ED1-41	ELECTRICAL DEMOLITION LEVEL 4 FLOOR PLAN
ELECTRICAL	
E0-01	ELECTRICAL SCHEDULES
E0-02	ELECTRICAL DETAILS
E1-41	LIGHTING LEVEL 4 FLOOR PLAN
E2-41	POWER & COMMUNICATIONS LEVEL 4 FLOOR PLAN

FIRE & SMOKE ASSEMBLIES NOTES

1. THE ANNULAR AREA OF ANY PENETRATION IN THE COMPOSITE DECK FLOOR FOR THE PASSAGE OF STEEL, FERROUS OR COPPER CONDUIT, PIPS, TUBES OR VENTS WITH A MAXIMUM NOMINAL DIAMETER OF SIX (6) INCHES SHALL BE FILLED WITH GROUT OR MORTAR FOR THE FULL THICKNESS OF THE FLOOR IN ACCORDANCE WITH IBC 712.4.1.1, EXCEPTION NO. 2.
2. INSTALL FIRE SAFING AT ALL GAPS BETWEEN FLOORS AND WALLS. INSTALL FIRE STOP SYSTEMS AND FIRE STOP SEALANT AT ALL PENETRATIONS OF RATED PARTITIONS, CEILINGS, FLOOR OR OTHER SURFACES IN ACCORDANCE WITH THE SPECIFICATIONS.
3. ANY PIPING, CONDUIT, OR WIRING PASSING THROUGH A WALL OR PARTITION CARRYING A FIRE RATING SHALL BE SEALED TIGHT TO THE WALL WITH A UL APPROVED METHOD. SEE ENGINEERED DRAWINGS.
4. ANY DUCTWORK SHOWN PASSING THROUGH A WALL OR PARTITION CARRYING A FIRE RATING SHALL BE EQUIPPED WITH AN APPROPRIATE FIRE RATED DAMPER AT THE POINT OF INTERSECTION WITH THE WALL. SEE MECHANICAL DRAWINGS FOR MORE INFO.
5. ALL MISCELLANEOUS WOOD FRAMING AND BLOCKING IN EXTERIOR WALLS AND ROOFS SHALL BE FIRE RETARDANT TREATED.
6. PENETRATIONS, INTO OR THROUGH, OF EITHER VERTICAL OR HORIZONTAL FIRE RATED BARRIERS SHALL BE PROTECTED BY A SYSTEM LISTED BY A RECOGNIZED TESTING AGENCY BY USING A DETAIL AND LISTING NUMBER PER NFPA 101 LIFE SAFETY CODE 1997 EDITION CHAPTER 6-2.3.2.4 (OR LATEST EDITION).

SSOE

S&W

PROFESSIONAL SEALS:

SOUTH CAROLINA CERTIFICATE OF AUTHORIZATION SSOE, INC No. 746

STATE OF SOUTH CAROLINA REGISTERED ARCHITECT WILLIAM J. FLEMING Columbia, SC No. 3209

8.6.2021

SUBMITTAL/REVISION SCHEDULE:

NO.	DATE	DESCRIPTION
	8.06.2021	CONSTRUCTION DOCUMENTS

■ APPROVED FOR CONSTRUCTION
□ NOT APPROVED FOR CONSTRUCTION

CLIENT INFORMATION:

SOUTH CAROLINA EDUCATION LOTTERY

South Carolina Education Lottery ®

CLIENT PROJECT #:	20048.00
SCEL PROJECT #:	Y20-N001-CB

PROJECT INFORMATION:

4TH FLOOR UPFIT

1333 MAIN STREET, COLUMBIA, SOUTH CAROLINA

SSOE/SW PROJECT #:	021-00531-00
SSOE/SW MANAGER:	BILL FLEMING

SSOE® | STEVENS & WILKINSON
1501 Main Street, Suite 730
Columbia, SC 29201
T. (803) 765-0320

THIS DRAWING IS THE PROPERTY OF SSOE | STEVENS & WILKINSON. UNAUTHORIZED USE OF ANY KIND, INCLUDING USE ON OTHER PROJECTS, IS PROHIBITED.
© SSOE, INC. 2021

GENERAL NOTES & SHEET INDEX

G1.02

PROJECT NARRATIVE

THE SCOPE OF THIS PROJECT INCLUDES SELECTIVE DEMOLITION FOR THE EXPANSION OF THE PRINT ROOM AND CREATION OF SEVERAL SMALL PRIVATE OFFICES IN LIEU OF THE CURRENT OPEN OFFICE SPACE. MECHANICALLY, THERE WILL BE AN ADDITIONAL HVAC UNIT TO INCREASE AIR SUPPLY TO THE EXPANDED PRINT ROOM AND DIRECT EXHAUST TIED INTO EXISTING BUILDING DUCTWORK TO MITIGATE THE TRANSFER OF ODORS AND MINIMIZE HEAT LOAD IN THE PRINT ROOM.

APPLICABLE CODES

1. 2018 ICC INTERNATIONAL BUILDING CODE
2. 2018 ICC INTERNATIONAL EXISTING BUILDING CODE
3. 2018 ICC INTERNATIONAL FIRE CODE
4. 2018 ICC INTERNATIONAL FUEL GAS CODE
5. 2018 ICC INTERNATIONAL MECHANICAL CODE
6. 2018 ICC INTERNATIONAL PLUMBING CODE W/ FOLLOWING INSERTIONS:
   A. SECTION 305.4.1, INSERT "18"
   B. SECTION 903.1, INSERT "9"
7. 2017 NFPA 70 NATIONAL ELECTRIC CODE
8. 2009 ICC INTERNATIONAL ENERGY CODE
9. 2017 ICC A117.1 ACCESSIBLE AND USEABLE BUILDINGS AND FACILITIES

TABLE 5-1: FLOOD HAZARD INFORMATION AND FLOOD LOADS

FLOOD HAZARD AREA

Base Flood Elevation _____ MSL

Design Flood Elevation _____ MSL

NON HIGH-VELOCITY WAVE ACTION

Elevation of Lowest Proposed Floor _____ MSL Meet AS 2.6.2.2

Dry floodproofing ■ no ☐ yes per ASCE 24

HIGH-VELOCITY WAVE ACTION

Elevation of bottom of Lowest Horizontal Structural Member _____ MSL

Flotation Resistant ■ no ☐ yes

Breakaway Wall ■ no ☐

IBC 1612 and SE-900, as applicable

ZONING CERTIFICATION

"I hereby certify that, to the best ... use plans comply with applicable zoning ordinances, and that plans have been submitted ... for their review and/or approval."

Signed: _____ _____

...eer Date

If the project ... National Pollution Discharge Elimination System (NPDES) permit from SCDHEC, including ... on the Site Plan(s).

EROSION ... MENT REDUCTION / STORMWATER MANAGEMENT

Designer's Certification:

"I hereby certify that the measures in this plan are designed to control erosion, retain sediment on the site, and manage stormwater in a manner that neither any on-site nor off-site damage or problem is caused or increased, that all structural measures are designed to the minimum standards for health and safety, and that all the provisions of the plan are in compliance with the Regulations contained in Chapter 72, Article 2, SC Code of Regulations (Erosion and Sediment Reduction and Stormwater Management Regulations)."

Signed: _____ _____

Architect / Engineer Date

TABLE 5-2 SOILS & SITE

SOILS INVESTIGATION (If required) ☐ no ☐ yes per IBC 1803.2

SOILS CLASSIFICATION

Site Class _____ per ... 1613.3.2

Classes Soil of Materials (UCS System) _____

Allowable Footing Bearing Pressure _____ psf

MINIMUM DESIGN SOIL BEARING LOAD _____ ... J06.2

COMPACTION

Subgrade _____ Percent ... ASTM D1557 ☐ AASHTO ... loads)

Base _____ Percent ... 698 ☐ ASTM D1557 ☐ AASHTO ... aving & roads)

Other _____ Percent ... ASTM D698 ☐ ASTM D1557 ☐ AASHTO ... y for paving & roads)

MINIMUM DESIGN SOIL LATERAL ... _____ psf per IBC 1610.1

FOOTINGS

Undisturbed Footing ☐ no ☐ yes

Compacted Fill ☐ no ☐ yes per IBC 1804.5

ELEVATION

Elevation ... _____ MSL

Elevation of Lo... ...oting _____ MSL

Elevation of Lowest Floor or Basement _____ MSL

TABLE 5-3E CODE INFROMATION FOR ADDITIONS, ALTERATIONS, OR CHANGE OF OCCUPANCY TO AN EXISTING STRUCTURE

METHOD OF COMPLIANCE: (Check only one Option and all items that apply under that Option.)	■ **Option 1: Prescriptive Compliance Method (Chapter 5)** ■ Alteration ☐ Addition ☐ Change of Occupancy ☐ Historic Building
	☐ **Option 2: Work Area Compliance Method (Chapters 6-12)** ☐ Alteration Level 1, minor including reroofing (Ch. 7) ☐ Alteration Level 2, reconfigurations of space (Ch. 8) ☐ Alteration Level 3, work area exceeds 50% (Ch. 9) ☐ Change of Occupancy (Ch. 10) ☐ Additions (Ch. 11) ☐ Historic Building (Ch. 12) Aggregate area of building: _____ SF Work area: _____ SF
	☐ **Option 3: Performance Compliance Method (Chapter 13)**
Original Building Code and Edition Applicable at time of Construction: _____	
Existing Sprinkler System?	■ Yes ☐ No
Existing Fire Alarm System?	☐ Manual ■ Auto
Seismic Evaluation Required?	☐ Yes ■ No
Major Facility Project? (See §48-52-810(10)(a))	☐ Yes ■ No
Change of Occupancy: Existing Occupancy Classification(s): _____ New Occupancy Classification(s): _____	☐ Yes ■ No
Historic Building: ☐ Preservation ☐ Rehabilitation	☐ Yes ■ No ☐ Restoration ☐ Reconstruction

TABLE 5-4 BUILDING AREA

AREA LIMIT BY TABLE 503 OF IBC (Do not indicate increases for sprinklers & street frontage.)	0 SF (area limitations per story)
AREA MODIFICATION FROM EQUATION 5-1 OF IBC (Insert equation from IBC 506.1 with completed calculations in this box) (Equation 5-1) Aa = At + [At x If] + [At x Is] Aa = 0 SF + [0 SF x0.00] + 0 SF x0.00]	0 SF SF ...aximum modified area per story)
	0 SF (maximum area per story)
Total Allowed Area of Building (summary of all stories)	0 SF (total allowable area)
AREA AS DESIGNED ... (Repeat for each ...)	0 SF
	0 SF
	0 SF
	0
	0 SF
Total Designed Area of Building	...

Aa = Allowable area per story (square feet).
At = Tabulary area per story in accordance with Table 503
If = Area increase factor due to frontage (percent) as in accordance with Section 506.2.
Is = Area increase due to sprinkler protection accordance with Section 506.3.

TABLE 5-5 BUILDING HEIGHT

	AS DESI...		AS ALLOWED BY IBC	
	IN FEET		IN FEET	IN STORIES
Without any Allowable Increase				
Allowable Height Increase				
Total Height including any Allowable Height Increase				

TABLE 5-7 GENEP ... REQUIREMENTS

SEPARATIO...			
Firebl...	☐ no	☐ yes	per IBC Section 718
Drafts...	☐ no	☐ yes	per IBC Section 718
Smoke Cont... ...em Required	☐ no	☐ yes	per IBC Sectio...
Smoke Barriers Required	☐ no	☐ yes	per IBC S...
Smoke Partitions Required	☐ no	☐ yes	per I...
Fire Partition Required	☐ no	☐ yes	
Fire Barrier Required	☐ no	☐ ye...	...u7
ALARM & DETECTION			
Fire Alarm System Required	☐		...dC Section 907
Emergency Alarm System Required			per IFC 908
SUPPRESSION			
Standpipes Required		☐ yes	per IFC Section 905
Sprinklers Required	no	☐ yes	per IFC Section 903
Sprinklers Provided	☐ no	☐ yes	
Portable Extin...	☐ no	☐ yes	per IFC 906
Other Su... ...uired	☐ no	☐ yes	per IFC 904
Smo... ...d	☐ no	☐ yes	per IFC 910
Other: (In... provided fire and life safety features not listed above, if any)			

TABLE 5-8 FIRE RESISTIVE RATING OF BUILDING ELEMENTS

BUILDING ELEMENT	Rating As Required (in hours)	Rating As Designed (in hours)	Testing Agency & Design No. (UL, FM, etc.)	Designers Wall/Partition Key Code
Structural Frame (per IBC Table 601)				
Bearing Walls Exterior Interior (per IBC Table 601)				
Nonbearing Walls & Partitions Exterior Interior (per IBC Table 601 & 602) Note: Footnote "e." from Table 601				
Floor Construction including supporting beams & joists (per IBC Table 601)				
Roof Construction including supporting beams & joists (per IBC Table 601)				
Fire Walls (per IBC Section 706)				
Fire Barriers (per IBC Section 707)				
Shaft Enclosures (per IBC Sectio...				
Fire Partit... (per IB...				
Opening... ...g by Category ... doors, etc. per IBC Section ...				
Others (as required by designer)				

TABLE 5-9 STRUCTURAL DESIGN INFORMATION

RISK CATEGORY _____ IBC Table 1604.5

LIVE LOADS

Floor Live Load F_B = _____ PSF List the Floor Live ... each Occupancy

Roof Live Load R_B = _____ PSF

Ground Snow Load P_g = _____ PSF IBC Fi...

WIND LOADS

Analysis Procedure _____ ...c609.6

Ultimate Design V_{ult} = _____ MPH ...c609A-1609C

Wind Speed Exposure Category _____ ...1609.4.3

Internal Pressure Coefficient GC_{pi} = _____ ASCE 7

External Pressure Coefficient GC_p = _____ ASCE 7

SEISMIC LOADS

Seismic Importance Factor ASCE 7 Table 1.5-2

Site Class _____ IBC 1613.3.2

Mapped Spectral R... S_s = _____ S_1 = _____

Design Spec... ...n Parameters S_{DS} = _____ S_{D1} = _____

Seismic ... _____ IBC Tables 1613.3.5(1) & 1613.3.5(2)

Basic Se... ...ing System _____

Design Base ... _____ KIPS

Seismic Response Coefficient(s) C_s = _____ ASCE 7

Response Modification Factor(s) R = _____ ASCE 7

Analysis Procedure _____

ARCHITECTURAL - MECHANICAL - ETC. LOADS Provide as applicable: architectural items, mechanical, plumbing, etc. per ASCE 7

SPECIAL LOADS Provide as applicable: abnormal items, moving loads, impact, holding, etc. per ASCE

* per IBC Chapter 16 and ASCE 7 -- Information may be shown on initial Structural Sheet of the drawings or on Sheet with other code information. List floor design loads on structural plans.

TABLE 5-10 PLUMBING INFORMATION

WATER SYSTEM

Service Line Size _____ Inches

Peak _____ GPM

Total Demand _____ No. Fixture Units

SANITARY SEWER SYSTEM

Loading _____ GPD

Service Line Size _____ Inches

Slope _____ min inches/ft

MINIMUM PLUMBING FIXTURES REQUIRED ... per IBC Section 403 & Table 403.1

	Male - Required		Female - Required	Female - Provided
Water Closets				
Lavatories				
Urinals *				

OTHER FIXTURES

	...ed	Provided	Per IPC Section 403 & Table 403.1
Drinking Fo...			
Unisex *			
Service S...			
Bathtubs/Show...			
Others (list)			

* Urinals -- See IPC 419.2

Where mixed Occupancies occur within buildings, expand this table to indicate Occupant loads for each. The minimum required toilet fixtures are calculated for the total Design Occupant Load indicated in Table 5-6.

TABLE 5-12 MECHANICAL INFORMATION

AIR COMFORT SYSTEMS

Overall Thermal Transfer Value (OTTV): _____

Building Heating Load _____

Building Cooling Load _____

OTHER LOADING FEATURES

Glass U Factor _____ ...d wall ratio _____

Insulation Values Roof ... ...rior Walls _____

Outside Air Minimum While Occupied _____ CFM _____ Occupants

MECHANICAL SYSTEMS, SERV... ...PMENT

Briefly describe mechanical ...

(The a... ...ered a minimum and any special attribute required to meet the mechanical codes.)

TABLE 5-13 ELECTRICAL INFORMATION

SERVICE TRANSFORMER ■ By Utility Co. ■ By Agency (if by Agency)

_____ KVA Primary ... Phase

ELECTRICAL SERVICE INFORMATION

Service Voltage / Phase _____ ...

Service Entrance Conductors Size _____ ...

Total Connected Load _____

Estimated Maximum Demand _____

Available Fault Current in Symmetrical Amperes _____

Interrupting Capacity of Service Overcurrent Dev... _____

GROUNDING ELECTRODE SYSTEM CO... _____ (NEC 250)

EMERGENCY SERVICE INFOR...

Emergency Generator _____ KVA _____ Voltage/Phase _____ Fuel

Exit / Emergency Light... Integral Battery ■ Generator

Fire Alarm Syste... ■ Automatic ■ Addressable ■ Class A ■ Class B

LIGHTNI... ...VIDED ■ No ■ Yes

COMMU... ...ORDINATED ■ Not Required ■ Yes

Contact DSIT Network/Infrastructure Planning for applicability.

NOT APPLICABLE

ssoe®

S&W

PROFESSIONAL SEALS:

SOUTH CAROLINA CERTIFICATE OF AUTHORIZATION SSOE, INC No. 746

STATE OF SOUTH CAROLINA WILLIAM J. FLEMING Columbia, SC No. 3452 REGISTERED ARCHITECT 8-6-2021

SUBMITTAL/REVISION SCHEDULE:

NO.	DATE	DESCRIPTION
	8.06.2021	CONSTRUCTION DOCUMENTS

■ APPROVED FOR CONSTRUCTION
☐ NOT APPROVED FOR CONSTRUCTION

CLIENT INFORMATION:

SOUTH CAROLINA EDUCATION LOTTERY

South Carolina Education Lottery®

CLIENT PROJECT #:	20048.00
SCEL PROJECT #:	Y20-N001-CB

PROJECT INFORMATION:

4TH FLOOR UPFIT

1333 MAIN STREET, COLUMBIA, SOUTH CAROLINA

SSOE/SW PROJECT #:	021-00531-00
SSOE/SW MANAGER:	BILL FLEMING

SSOE | STEVENS & WILKINSON
1501 Main Street, Suite 730
Columbia, SC 29201
T. (803) 765-0320

THIS DRAWING IS THE PROPERTY OF SSOE | STEVENS & WILKINSON. UNAUTHORIZED USE OF ANY KIND, INCLUDING USE ON OTHER PROJECTS, IS PROHIBITED.
© SSOE, INC. 2021

CODE ANALYSIS

G2.00

BUILDING DESIGN OCCUPANT LOAD (per IBC TABLE 1004.1.2)

AREA NAME	AREA NUMBER	OCCUPANCY FLOOR AREA	FLOOR AREA PER OCCUPANT	CODE MINIMUM OCCUPANTS FOR THIS OCCUPANCY	DESIGN OCCUPANTS FOR THIS OCCUPANCY
LEVEL 4					
BUSINESS	B-1	1,173 SF	150 SF	8	8
		1,173 SF		8	8

IBC TABLE 1017.2

EXIT ACCESS TRAVEL DISTANCE

OCCUPANCY	WITH SPRINKLER SYSTEM
B	300 FEET MAXIMUM DISTANCE

LIFE SAFETY LEGEND

- EXISTING CONSTRUCTION
- NEW NON RATED METAL STUDS CONSTRUCTION
- EXISTING 1 HOUR RATED METAL STUDS CONSTRUCTION
- EXISTING 2 HOUR RATED METAL STUDS CONSTRUCTION
- CENTERLINE
- BUILDING ELEMENTS ABOVE
- 23.4 — EXISTING COLUMN GRID REFERENCE
- ALIGN — ALIGNMENT REFERENCE
- XFE — EXISTING FIRE EXTINGUISHER
- EGRESS TRAVEL DISTANCE
- EXIT LIGHT FIXTURE - NEW
- EXIT LIGHT FIXTURE - EXISTING TO REMAIN

999 / 999
- DESIGN # OF OCCUPANTS
- MAXIMUM # OF OCCUPANTS ALLOWABLE PER EGRESS SYSTEM WIDTH

EGRESS CAPACITY TAG

60
- DOOR & FRAME RATING IN MINUTES

DOOR IDENTIFICATION

4W
- PARTITION RATING *NOTED ON LIFE SAFETY PLANS

PARTITION TYPE IDENTIFICATION

Name 150 SF 101 999 ZONE
- NAME (AT OCCUPANT COUNT PLANS AND LIFE SAFETY PLANS, THIS IS THE OCCUPANT LOAD FACTOR TYPE)
- SQUARE FOOTAGE
- NUMBER (IF USED)
- OCCUPANT LOAD COUNT (IF USED)
- ZONE (IF USED)

AREA REFERENCE

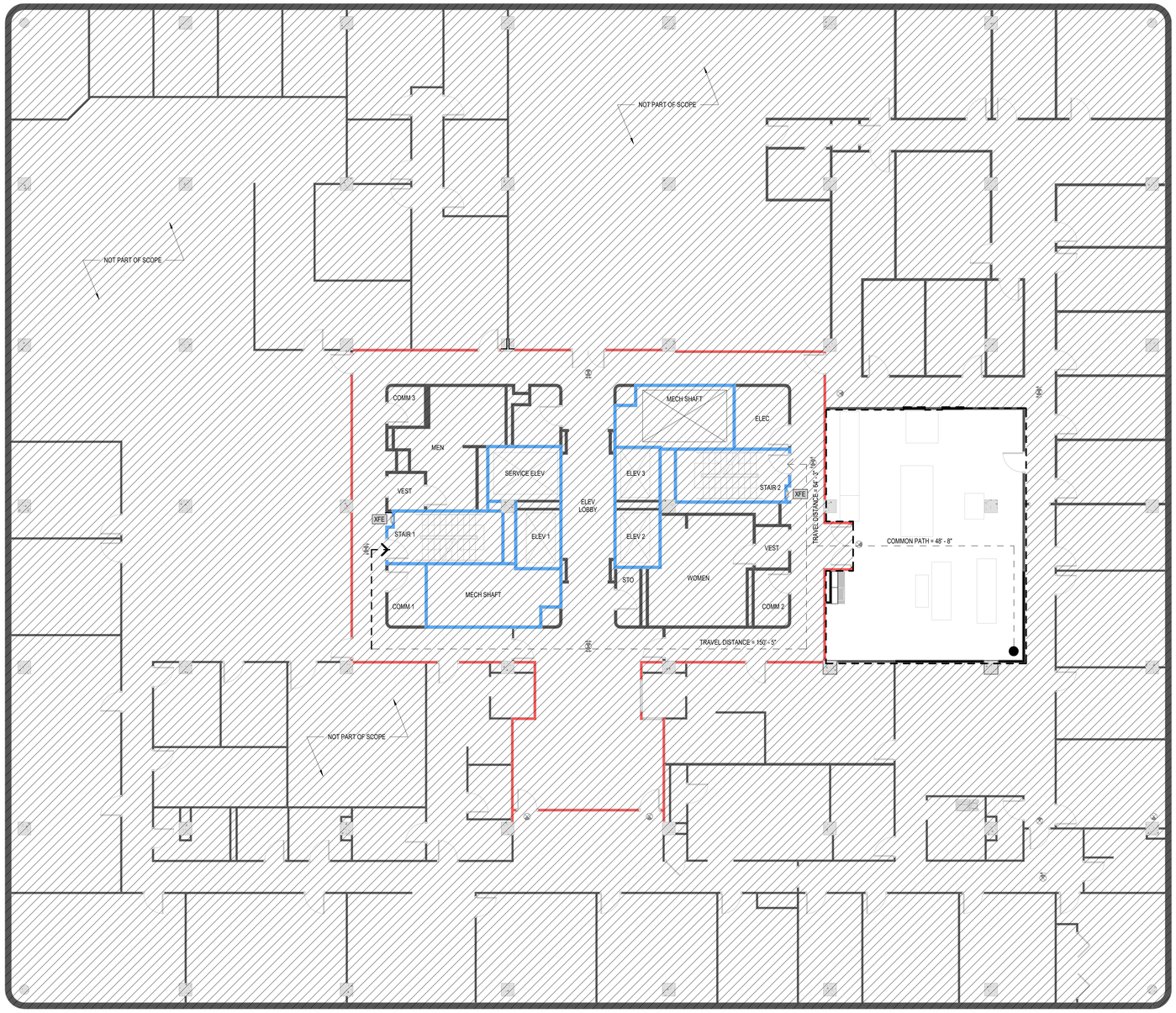

1 LIFE SAFETY FLOOR PLAN
1/8" = 1'-0"

LEGEND

BUSINESS

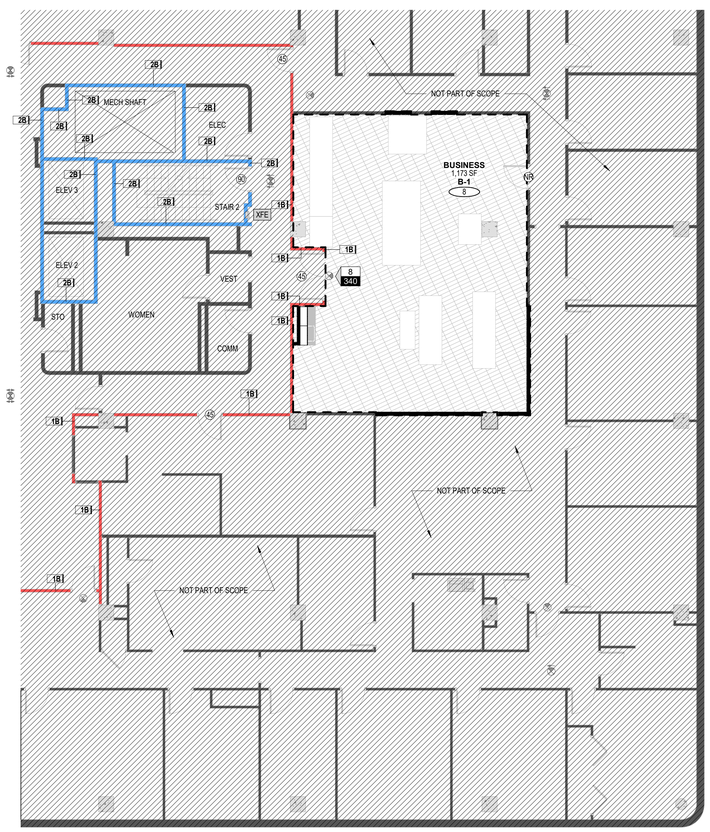

2 OCCUPANCY FLOOR PLAN
1/8" = 1'-0"

TRUE NORTH
PROJECT NORTH

C:\Autodesk\Revit\2004800 - Arch - SC Education Lottery Upfit - Adjusted Scope - V19.2_lbajarias@ssoe.com.rvt :FILE PATH
10/20/2021 3:05:43 PM :PRINT DATE

SSOE
S&W

PROFESSIONAL SEALS:

SOUTH CAROLINA CERTIFICATE OF AUTHORIZATION SSOE, INC No. 746

STATE OF SOUTH CAROLINA WILLIAM J. FLEMING Columbia, SC No. 3452 REGISTERED ARCHITECT

8-6-2021

SUBMITTAL/REVISION SCHEDULE:

NO.	DATE	DESCRIPTION
	8.06.2021	CONSTRUCTION DOCUMENTS

■ APPROVED FOR CONSTRUCTION
□ NOT APPROVED FOR CONSTRUCTION

CLIENT INFORMATION:

SOUTH CAROLINA EDUCATION LOTTERY

South Carolina Education Lottery®

CLIENT PROJECT #:	20048.00
SCEL PROJECT #:	Y20-N001-CB

PROJECT INFORMATION:

4TH FLOOR UPFIT

1333 MAIN STREET, COLUMBIA, SOUTH CAROLINA

SSOE/SW PROJECT #:	021-00531-00
SSOE/SW MANAGER:	BILL FLEMING

SSOE | STEVENS & WILKINSON
1501 Main Street, Suite 730
Columbia, SC 29201
T. (803) 765-0320

THIS DRAWING IS THE PROPERTY OF SSOE | STEVENS & WILKINSON. UNAUTHORIZED USE OF ANY KIND, INCLUDING USE ON OTHER PROJECTS, IS PROHIBITED.

© SSOE, INC. 2021

LEVEL 4 LIFE SAFETY & OCCUPANT LOAD PLANS

G3.40

A | B | C | D | E | F | G | H | J

SEISMIC AND WIND REQUIREMENTS FOR HVAC SYSTEMS

INFORMATION FOR IBC-2018 /ASCE 7-16

A. PER SECTION 301.15 OF THE 2018 EDITION OF THE INTERNATIONAL MECHANICAL CODE, MECHANICAL EQUIPMENT, APPLIANCES AND SUPPORTS (INLCUDING ROOF CURBS & ROOF RAILS) EXPOSED TO WIND SHALL BE DESIGNED AND INSTALLED TO RESIST THE WIND PRESSURES DETERMINED IN ACCORDANCE WITH THE INTERNATIONAL BUILDING CODE. WHERE SEISMIC RESTRAINT IS REQUIRED, THE MORE DEMANDING FORCE OF WIND AND SEISMIC MUST BE USED. SEE SEISMIC INFORMATION CONTAINED IN THE STRUCTURAL DRAWINGS FOR SITE SPECIFIC INFORMATION ON SEISMIC DESIGN CATEGORY.
B. USE APPLICABLE TABLE BELOW FOR SPECIFIC COMPONENTS IMPORTANCE FACTOR DESIGNATIONS.
C. USE APPLICABLE TABLE BELOW TO DETERMINE SEISMIC RESTRAINT REQUIREMENTS FOR EACH MECHANICAL COMPONENT.
D. FOR ALL COMPONENTS REQUIRING SEISMIC RESTRAINT, THE COMPONENT SUPPORTS AND ATTACHMENTS SHALL BE DESIGNED BY A REGISTERED DESIGN PROFESSIONAL.
E. WHERE SEISMIC RESTRAINT IS REQUIRED, HOUSEKEEPING PADS NEEDED FOR THE INSTALLATION OF EQUIPMENT UNDER THIS CONTRACT MUST BE DESIGNED BY THE SEISMIC ENGINEER. DO NOT POUR ANY HOUSEKEEPING PADS PRIOR TO THE THE RECEIPT OF THE SEISMIC SUBMITTAL.
F. SEISMIC RESTRAINTS FOR PIPING AND DUCTWORK MUST BE SHOWN ON LAYOUT DRAWINGS SHOWING SPECIFIC RESTRAINT LOCATIONS ALONG WITH ACCOMPANYING DETAILS AND CALCULATIONS.
G. SEISMIC CATEGORY "C".

COMPONENT IMPORTANCE FACTOR (Ip) DESIGNATION

Ip = 1.0	Ip = 1.5
• ROOFTOP EXHAUST FAN • DUCTWORK & HVAC PIPING • VARIABLE AIR VOLUME TERMINAL UNIT • WATER SOURCE HEAT PUMP	

SEISMIC DESIGN CATEGORY C

		COMPONENT IMPORTANCE FACTOR (Ip)	
		1.0	1.5
COMPONENT IDENTIFICATION		SEISMIC RESTRAINT REQUIREMENT	SEISMIC RESTRAINT REQUIREMENT
ROOF MOUNTED		NOT REQUIRED	RESTRAIN ALL
FLOOR MOUNTED		NOT REQUIRED	RESTRAIN ALL
WALL MOUNTED		NOT REQUIRED	RESTRAIN ALL
COMPONENT SUPPORTS		NOT REQUIRED	RESTRAIN ALL
SUSPENDED EQUIPMENT	INLINE W/ DUCT	NOT REQUIRED	RESTRAIN IF >75 LBS PROVIDE FLEX. CONN. (SEE NOTE 3)
SUSPENDED EQUIPMENT	NOT INLINE W/ DUCT/PIPE	NOT REQUIRED	RESTRAIN ALL
SUSPENDED DUCTILE PIPING (STEEL, ALUMINUM, COPPER, ETC.)		NOT REQUIRED	>2" (SEE NOTE 4)
SUSPENDED NON DUCTILE PIPING (CAST IRON, PLASTIC, CERAMIC)		NOT REQUIRED	RESTRAIN ALL (SEE NOTE 4)
SUSPENDED PIPE ON TRAPEZE		NOT REQUIRED	RESTRAIN IF ANY PIPE ON TRAPEZE > 2" RESTRAIN IF TOTAL WEIGHT OF PIPES ON TRAPEZE > 10 LBS/FT (SEE NOTE 4)
DUCTWORK		NOT REQUIRED	6 SQ.FT. AND LARGER (SEE NOTE 5)
MULTIPLE DUCTS ON TRAPEZE		NOT REQUIRED	RESTRAIN IF TOTAL WEIGHT OF DUCTS ON TRAPEZE > 10 LBS/FT (SEE NOTES 4,5)
COMPONENT CERTIFICATION (SEE NOTE 6)		NOT REQUIRED	REQUIRED

NOTES:
1. EQUIPMENT 20 LBS. OR LESS IS EXEMPT IF FLEXIBLE CONNECTIONS ARE PROVIDED BETWEEN THE COMPONENT AND ASSOCIATED DUCTWORK, PIPING, AND CONDUIT.
2. RESTRAINTS ARE NOT REQUIRED IF THE COMPONENT WEIGHTS 400 LBS. OR LESS, IS MOUNTED AT 4 FT. OR LESS ABOVE A FLOOR, AND HAS FLEXIBLE CONNECTIONS BETWEEN THE COMPONENT AND ASSOCIATED DUCTWORK, PIPING, AND CONDUIT.
3. FLEXIBLE CONNECTIONS REQUIRED FOR PIPE CONNECTIONS ONLY.
4. RESTRAINT IS NOT REQUIRED IF THE PIPING / DUCTWORK IS SUPPORTED BY HANGERS AND EACH HANGER IN THE PIPING RUN IS 12 IN. OR LESS IN LENGTH FROM THE TOP OF THE PIPE TO THE SUPPORTING STRUCTURE. WHERE PIPES ARE SUPPORTED ON A TRAPEZE, THE TRAPEZE SHALL BE SUPPORTED BY HANGERS HAVING A LENGTH OF 12 IN. OR LESS. WHERE ROD HANGERS ARE USED, THEY SHALL BE EQUIPPED WITH SWIVELS, EYE NUTS OR OTHER DEVICES TO PREVENT BENDING IN THE ROD.
5. ALL DUCTWORK, REGARDLESS OF SIZE, DESIGNED TO CARRY TOXIC, HIGHLY TOXIC, OR EXPLOSIVE GASES OR USED FOR SMOKE CONTROL MUST BE RESTRAINED.
6. COMPONENT CERTIFICATION MUST BE SUPPLIED BY THE EQUIPMENT MANUFACTURER AT TIME OF SUBMITTAL FOR REVIEW BY ENGINEER OF RECORD.

DEMOLITION NOTES

1. THESE DRAWINGS ARE BASED ON EXISTING PLANS. REFER TO ARCHITECTURAL DRAWINGS FOR EXACT LOCATION OF DEMOLITION AREAS. THE CONTRACTOR SHALL THOROUGHLY INVESTIGATE THE EXISTING CONDITIONS PRIOR TO BID.

2. THE PURPOSE AND INTENT OF DEMOLITION SHEET IS TO SHOW THE CONTRACTOR ITEMS REQUIRED TO BE REMOVED, BUT IS IN NO WAY LIMITED TO THE ITEMS SHOWN. ALL BIDDERS ARE REQUIRED TO MAKE AN ON-SITE VISIT AND INSPECT EXISTING MECHANICAL CONDITIONS BEFORE FINAL BID DATE.

3. ON-SITE INSPECTIONS ARE REQUIRED TO OCCUR PRIOR TO FINAL BID DATE TO DETERMINE ALL EXISTING CONDITIONS AND COORDINATE POWER DOWN TIMES. BIDDING CONTRACTORS ARE REQUIRED TO SURVEY ALL AREAS OF THE BUILDING PRIOR TO BIDDING TO VIEW THE EXISTING CONDITIONS. ANY ADDITIONAL WORK REQUIRED OR CLARIFICATIONS TO THE WORK SHOWN THAT COULD HAVE BEEN REASONABLY VERIFIED BY THE SURVEY SHALL BE THE RESPONSIBILITY OF THE CONTRACTOR.

4. PERFORM ALL CUTTING AND DRILLING REQUIRED. PATCH ALL HOLES, PAINT AND OTHERWISE REPAIR ALL DAMAGES TO THE BUILDING STRUCTURE AND SURFACES WHICH OCCUR AS A RESULT OF THIS PROJECT. REPAIRS SHALL RESTORE THE STRUCTURE TO THE SAME CONDITION EXISTING PRIOR TO BEGINNING WORK.

5. ANY DAMAGE TO EXISTING CONDITIONS CAUSED BY DEMOLITION AND/OR NEW WORK SHALL BE REPAIRED BY THE CONTRACTOR RESPONSIBLE FOR THE DAMAGE.

6. ANY NEW OR EXISTING PIPING PASSING THROUGH A NEW OR EXISTING WALL CARRYING A FIRE RATING SHALL BE SEALED TIGHT TO THE WALL WITH A UL APPROVED METHOD.

7. ALL DEMOLITION SHALL BE PERFORMED TO PREVENT THE ARBITRARY DESTRUCTION OR INTERRUPTION OF CONCEALED UTILITIES WHICH ARE INTENDED TO REMAIN IN USE AND THE ROUTING OF WHICH CAN NOT BE PREDETERMINED UNTIL DEMOLITION IS STARTED. ALL SUCH DISCOVERIES OF UTILITIES WHICH ARE IN A DIFFERENT LOCATION FROM THAT INDICATED, CHANGE DIRECTION FROM FLOOR-TO-FLOOR, ETC. OR ARE UNIDENTIFIED, SHALL BE REPORTED TO THE ARCHITECT BEFORE REMOVAL OR DISTURBANCE.

8. REMOVE, STORE, CLEAN, REINSTALL, RECONNECT, AND MAKE OPERATIONAL EQUIPMENT INDICATED FOR RELOCATION.

9. CONTRACTOR IS RESPONSIBLE FOR MAINTAINING BUILDING SERVICES DURING DEMOLITION INCLUDING ALL TESTING, SERVICE FEES, RENTAL OF TEMPORARY EQUIPMENT OR INSTALLATION AND CONNECTION OF TEMPORARY SERVICES.

10. WHERE WALLS, FLOORS OR CEILINGS ARE CUT, REMOVED OR DAMAGED FOR INVESTIGATING EXISTING CONDITIONS, DEMOLISHING SERVICES, INSTALLING NEW SERVICES, ETC. THE CONTRACTORS SHALL COORDINATE THE PATCHING OF THE WALLS, FLOORS & CEILINGS TO MATCH EXISTING WITH THE BUILDING FINISHES CONTRACTOR AND/OR GENERAL CONTRACTOR.

11. NEW WORK SHOWN IS SUGGESTED ROUTING. CONTRACTOR SHALL FIELD INVESTIGATE EXISTING SERVICES AVAILABLE. BASED ON THE CONTRACTORS DISCOVERIES, THEY MAY SUGGEST ALTERNATE ROUTINGS. THE ENGINEER OF RECORD SHALL MAKE THE FINAL DETERMINATION ON WHETHER THE SERVICES SHALL BE INSTALLED AS SHOWN OR AS SUGGESTED BY THE CONTRACTOR.

12. WHERE PIPE, INSULATION, OR EQUIPMENT TO REMAIN IS DAMAGED OR DISTURBED, REMOVE DAMAGED PORTIONS AND INSTALL NEW PRODUCTS OF EQUAL CAPACITY AND QUALITY.

SYMBOLS

SYMBOL	DESCRIPTION
1	REVISION NUMBER - SHOWN ON PLANS
	POINT WHERE NEW CONNECTS TO EXISTING
- / ---	NUMBER OF DETAIL ON SHEET / NUMBER OF SHEET WHERE DETAIL APPEARS
1	KEYNOTE
	CONTINUATION SYMBOL
Room 1	ROOM NAME AND NUMBER
	ITEM TO BE DEMOLISHED
	AREA NOT IN CONTRACT
18"x8"	SQUARE DUCT SIZE TAG (WIDTH x HEIGHT)
18"/8"	OVAL DUCT SIZE TAG (WIDTH / HEIGHT)
16"Ø	ROUND DUCT SIZE TAG (DIAMETER)
(E)	EXISTING DUCT TAG
	DUCT BEING DEMOLISHED
S/A	SUPPLY AIR
S-O/A	SUPPLY AIR (100% OUTSIDE AIR)
O/A	OUTSIDE AIR
R/A	RETURN AIR
T/A	TRANSFER AIR
E/A	EXHAUST AIR
L/A	RELIEF AIR
GE/A	GREASE EXHAUST AIR
SE/A	SMOKE EXHAUST AIR
FLUE	EXHAUST GAS FLUE
C/A	COMBUSTION AIR
DROP	RECTANGULAR SUPPLY/OUTSIDE AIR DUCT RISE
DROP	ROUND SUPPLY/OUTSIDE AIR DUCT RISE
DROP	RECTANGULAR RETURN/TRANSFER AIR DUCT RISE
DROP	ROUND RETURN/TRANSFER AIR DUCT RISE
DROP	RECTANGULAR EXHAUST/RELIEF AIR DUCT RISE
DROP	ROUND EXHAUST/RELIEF AIR DUCT RISE
SUPPLY OUTLET	RETURN/EXHAUST INLET
A-12x12 / 150	SECTORIZING BAFFLE OR BLANKOFF PANEL; GRILLES, REGISTERS, AND DIFFUSERS TAG; INLET/OUTLET SIZE; CFM; TYPE (SEE SCHEDULE)
C-6" / 150	LINEAR DIFFUSER; NECK SIZE; CFM; TYPE (SEE SCHEDULE)
	MECHANICAL EQUIPMENT
VAV-XX	MECHANICAL EQUIPMENT TAG
	EXISTING MECHANICAL EQUIPMENT
(E)VAV-XX	EXISTING MECHANICAL EQUIPMENT TAG (TYPICAL FOR ALL EXISTING TAGS)
	MECHANICAL EQUIPMENT FOR REFERENCE
VAV-XX	MECHANICAL EQUIPMENT TAG (REFER TO OTHER DISCIPLINE FOR ADDITIONAL INFORMATION)

SENSOR	SYMBOL	SYMBOL	SENSOR
CARBON DIOXIDE SENSOR	CO2	TH	TEMPERATURE & HUMIDITY SENSOR
CARBON MONOXIDE SENSOR	CO	TS	TEMPERATURE SENSOR
NITROGEN DIOXIDE SENSOR	NO2	T	THERMOSTAT
HUMIDITY SENSOR	HS	MS	MANUAL SWITCH
HUMIDISTAT	H	S	SENSOR

DAMPER	SYMBOL	SYMBOL	DAMPER
FIRE DAMPER	F	B	MANUAL BALANCING DAMPER
SMOKE DAMPER	S	D	BACKDRAFT DAMPER
MOTORIZED DAMPER	M	C	COMBINATION FIRE/SMOKE DAMPER

HVAC PIPING SYMBOLS

SYMBOL	DESCRIPTION
2"	PIPE SIZE TAG (DIAMETER)
	ABOVE GROUND PIPING
1/8" / 12" SLOPE	PIPE SLOPE TAG
	BELOW GROUND PIPING
INVERT: -10' - 1"	PIPE INVERT ELEVATION TAG
2" (E)	EXISTING PIPE TAG
	PIPING BEING DEMOLISHED
CHWR	CHILLED WATER RETURN
CHWS	CHILLED WATER SUPPLY
CD	CONDENSATE DRAINAGE
SWR	SOURCE WATER RETURN
SWS	SOURCE WATER SUPPLY
HHWR	HEATING WATER RETURN
HHWS	HEATING WATER SUPPLY
STM	STEAM
CDR	CONDENSATE RETURN

ABBREVIATIONS

&	AND
Ø	ROUND
A	AIR
AB	ABOVE BASE
ABV	ABOVE
AC	AIR CONDITIONING
ACOUS	ACOUSTICAL
AD	AREA DRAIN
ADD	ADDENDUM
ADDL	ADDITIONAL
AFF	ABOVE FINISHED FLOOR
AFUE	ANNUAL FUEL UTILIZATION EFFICIENCY
AG	ABOVE GROUND
ALT	ALTERNATE
ALUM	ALUMINUM
AP	ACCESS PANEL
APPROX	APPROXIMATE
ARCH	ARCHITECT/ARCHITECTURAL
AV	ACID RESISTANT VENT
AW	ACID RESISTANT WASTE
AUTO	AUTOMATIC
BFF	BELOW FINISHED FLOOR
BLDG	BUILDING
BLW	BELOW
BM	BEAM
BO	BY OTHER
BOT	BOTTOM
BSMT	BASEMENT
BTU	BRITISH THERMAL UNITS
BTUH	BRITISH THERMAL UNITS PER HOUR
BTWN	BETWEEN
CAP	CAPACITY
CB	CATCH BASIN
CCW	COUNTER CLOCKWISE
CFCV	CONSTANT FLOW CONTROL VALVE
CFM	CUBIC FEET PER MINUTE
CHW	CIRCULATING HOT WATER
CI	CAST IRON
CLG	CEILING
CLG	COOLING
CO	CLEAN OUT
COL	COLUMN
COMB	COMBINATION
CONC	CONCRETE
COND	CONDENSATE
CONF	CONFERENCE
CONN	CONNECT
CONST	CONSTRUCTION
CONT	CONTINUE/CONTINUATION
CONTR	CONTRACT/CONTRACTOR
COORD	COORDINATE
CTR	CENTER
CUFT	CUBIC FEET
CV	CHECK VALVE
CW	COLD WATER
CW	CLOCKWISE
D	DEGREE
DB	DRY BULB
DET	DETAIL
DIA	DIAMETER
DIAG	DIAGONAL
DISCH	DISCHARGE
DIV	DIVISION
DI	DEIONIZED WATER
DMPR	DAMPER
DN	DOWN
DWG	DRAWING
DW	DISTILLED WATER
EA	EACH
EAT	ENTERING AIR TEMPERATURE
EL	ELBOW
ELEC	ELECTRICAL
ELEV	ELEVATION
EP	EXPLOSION PROOF
EQ	EQUAL
EQUIP	EQUIPMENT
EWC	ELECTRIC WATER COOLER
EWT	ENTERING WATER TEMPERATURE
E/A	EXHAUST AIR
EAH	EXHAUST HOOD
EXIST	EXISTING
EXP	EXPANSION
EXPJT	EXPANSION JOINT
EXT	EXTERIOR
F	DEGREES FAHRENHEIT
FCO	FLOOR CLEAN OUT
FD	FLOOR DRAIN
FD	FIRE DAMPER
FDV	FIRE DEPARTMENT VALVE
FHC	FIRE HOSE CABINET
FL	FLOOR
FLEX	FLEXIBLE
FLG	FLANGE
FO	FUEL OIL
FOV	FUEL OIL VENT
FOR	FUEL OIL RETURN
FOS	FUEL OIL SUPPLY
FPM	FEET PER MINUTE
FRP	FIBERGLASS REINFORCED PIPE
FS	FULL SIZE
FS	FLOOR SINK
FT	FOOT/FEET
FTG	FOOTING
FTR	FIN TUBE RADIATION
FUT	FUTURE
GA	GAGE/GAUGE
GAL	GALLON
GALV	GALVANIZED
GC	GENERAL CONTRACTOR
GEN	GENERATOR
GENL	GENERAL
GPM	GALLONS PER MINUTE
GR	GRADE
GW	GREASE WASTE
HB	HOSE BIB
HD	HEAD
HHWR	HYDRONIC HOT WATER RETURN
HHWS	HYDRONIC HOT WATER SUPPLY
HORZ	HORIZONTAL
HP	HORSE POWER
HP	HIGH PRESSURE
HTG	HEATING
HTR	HEATER
HW	HOT WATER
HYD	HYDRANT
ID	INDIRECT
IN	INCH
INL	INLET
INSUL	INSULATION
INT	INTERIOR
INV	INVERT
INWG	INCHES WATER GAUGE
JT	JOINT
LAB	LABORATORY
LB	POUND
LB/HR	POUNDS PER HOUR
LAT	LEAVING AIR TEMPERATURE
LF	LINEAL FOOT
LOC	LOCATION
LP	LOW PRESSURE
LPG	LIQUEFIED PETROLEUM GAS
LR	LIQUID REFRIGERANT
LVR	LOUVER
LWT	LEAVING WATER TEMPERATURE
M/A	MIXED AIR
MAN	MANUAL
MATL	MATERIAL
MAV	MANUAL AIR VENT
MAX	MAXIMUM
MBD	MOTORIZED BYPASS DAMPER
MBH	ONE THOUSAND BTU PER HOUR
MCF	ONE THOUSAND CUBIC FEET
MCW	MAKE-UP COLD WATER
MD	MOTORIZED DAMPER
MECH	MECHANICAL
MFR	MANUFACTURER
MH	MANHOLE
MIN	MINIMUM
MISC	MISCELLANEOUS
MTR	MOTOR
MU/A	MAKE-UP/AIR
N	NECK
NC	NOISE CRITERIA
NC	NORMALLY CLOSED
NIC	NOT IN CONTRACT
NO	NUMBER
NO	NORMALLY OPEN
NOM	NOMINAL
NTS	NOT TO SCALE
O	OXYGEN
O/A	OUTSIDE AIR
OC	ON CENTER
OF	OVERFLOW
OPNG	OPENING
PD	PRESSURE DROP
PIV	POST INDICATOR VALVE
PLBG	PLUMBING
PR	PAIR
PREL	PRELIMINARY
PRESS	PRESSURE
PRIM	PRIMARY
PRV	PRESSURE REDUCING VALVE
PSI	POUNDS PER SQUARE INCH
PSIG	POUNDS PER SQUARE INCH GAUGE
PW	POTABLE WATER
PWR	POWER
R	DUCT RISER
R/A	RETURN AIR
RCP	RADIANT CEILING PANEL
RD	ROOF DRAIN
REC	RECESSED
RED	REDUCER
REFR	REFRIGERATION
RH	RELATIVE HUMIDITY
REQD	REQUIRED
REV	REVERSE
RL/A	RELIEF AIR
RM	ROOM
RPM	REVOLUTIONS PER MINUTE
RSD	ROOF SAFETY DRAIN
RW	RAIN WATER
SF	SQUARE FOOT
S/A	SUPPLY AIR
SAN	SANITARY
SCHED	SCHEDULE
SECT	SECTION
SF	SQUARE FOOT
SD	SMOKE DAMPER
SHT	SHEET
SIM	SIMILAR
SLV	SLEEVE
SM	SURFACE MOUNT
SP	STANDPIPE
SP	STATIC PRESSURE
SPEC	SPECIFICATION
SPS	STATIC PRESSURE STATION
SQ	SQUARE
SR	SUCTION REFRIGERANT
SS	STAINLESS STEEL
STD	STANDARD
STM	STEAM
STRUCT	STRUCTURAL
SUCT	SUCTION
SUSP	SUSPENDED
T	THERMOSTAT
TCP	TEMPERATURE CONTROL PANEL
TD	TEMPERATURE DROP
TDR	TRENCH DRAIN
TEFC	TOTALLY ENCLOSED FAN COOLED
TEMP	TEMPERATURE
TYP	TYPICAL
UFD	UNDER FLOOR DUCT
UG	UNDERGROUND
VAC	VACUUM
V	VENT
VAV	VARIABLE AIR VOLUME
VEL	VELOCITY
VENT	VENTILATION
VERT	VERTICAL
VOL	VOLUME
VTR	VENT THROUGH ROOF
W	WASTE
WB	WET BULB
WCO	WALL CLEAN OUT
WH	WALL HYDRANT

EQUIPMENT ABBREVIATIONS

AC	AIR CONDITIONING UNIT
ACC	AIR COOLED CONDENSER
ACCU	AIR COOLING CONDENSING UNIT
AFMS	AIR FLOW MEASURING STATION
AHU	AIR HANDLING UNIT
AS	AIR SEPARATOR
B	BOILER
CF	CABINET FAN
CF	CHEMICAL FEEDER
CFP	CHEMICAL FEEDER PUMP
CH	CHILLER
CRU	CONDENSATE RETURN UNIT
CT	COOLING TOWER
CUH	CABINET UNIT HEATER
CWP	CONDENSER WATER PUMP
CHWP	CHILLED WATER PUMP
DBP	DOMESTIC WATER BOOSTER PUMP
DC	DUCT MOUNTED COIL
DCP	DOMESTIC WATER CIRCULATING PUMP
EF	EXHAUST FAN
EDC	ELECTRIC DUCT COIL
ET	EXPANSION TANK
EWH	ELECTRIC WATER HEATER
FCU	FAN COIL UNIT
FP	FIRE PUMP
GI	GREASE INTERCEPTOR
GRV	GRAVITY ROOF VENTILATOR
H	HUMIDIFIER
HWP	HEATING WATER PUMP
HX	HEAT EXCHANGER
HPU	HEAT PUMP UNIT
HRU	HEAT RECOVERY UNIT
ILC	INLINE CENTRIFUGAL
PF	PROPELLER FAN
PRV	POWER ROOF VENTILATOR
PWF	POWER WALL FAN
RE	RETURN/EXHAUST FAN
RTU	ROOFTOP UNIT
SA	SHOCK ABSORBER
SAT	SOUND ATTENUATOR
SEP	SEWAGE EJECTOR PUMP
SF	SUPPLY FAN
SP	SUMP PUMP
UH	UNIT HEATER
US	UTILITY SET
UV	UNIT VENTILATOR
WFMS	WATER FLOW MEASURING STATION
WH	WATER HEATER

NOTES

1. THE SPECIFICATIONS AND ACCOMPANYING DRAWINGS DESCRIBE APPROVED MANUFACTURERS AND THE SCOPE OF WORK OF THIS PROJECT. ALL LABOR, MATERIAL, EQUIPMENT, MACHINERY, SUPERVISION, MANAGEMENT AND OTHER ITEMS NECESSARY TO PROVIDE A COMPLETE INSTALLATION OF ALL SYSTEMS SHOWN ON DRAWINGS AND/OR SPECIFICATIONS TO BE PROVIDED BY THE CONTRACTOR.

2. ALL WORK IS TO BE PERFORMED IN STRICT ACCORDANCE WITH THE LATEST EDITION OF THE INTERNATIONAL MECHANICAL CODE AND BUILDING CODE, NFPA CODES, AND APPLICABLE STATE AND LOCAL CODES AND ORDINANCES. OBTAIN ALL PERMITS REQUIRED, GIVE ALL LEGAL NOTICES, AND HAVE ALL WORK INSPECTED AS REQUIRED BY LOCAL OR STATE LAW.

3. DRAWINGS SHOULD BE INTERPRETED AS GENERAL LAYOUT AND ARRANGEMENT DRAWINGS. THE DRAWINGS ARE NOT INTENDED TO SHOW AND CANNOT SHOW COMPLETE OR PRECISE MEASUREMENTS AND DETAILS OF THE BUILDING AND INSTALLATION IN EVERY RESPECT, AND THEY DO NOT INCLUDE ALL DETAILS OF MANUFACTURED EQUIPMENT, CONSTRUCTION, PIPING, DUCT WORK, ETC. MEASUREMENT FIGURES WRITTEN UPON THE DRAWING ARE TO BE RELIED UPON AS A DIMENSION FOR INSTALLATION PURPOSES, EXACT LOCATIONS AND MEASUREMENTS ARE TO BE DEFINED IN THE FIELD AND THE CONTRACTOR IS RESPONSIBLE FOR THEIR ACCURACY AND USE IN CONSTRUCTION OF THE WORK. COORDINATE CLOSELY WITH OWNER & OTHER TRADES.

4. TRANSITION RECTANGULAR DUCTWORK ON BOTTOM AND SIDES. MAINTAIN TOP OF DUCTWORK LEVEL AND AS HIGH AS POSSIBLE UNLESS NOTED OTHERWISE.

5. FLEXIBLE DUCT RUN OUTS TO CEILING DIFFUSERS SHALL BE FREE OF 90 DEG. TURNS, SAGS AND KINKS AND SHALL BE THE SAME SIZE AS THE DIFFUSER INLET. MAXIMUM LENGTH= 6 FEET.

6. ALL DUCT TRANSITIONS FROM SQUARE TO ROUND ARE TO BE SMOOTH AND TAPERED SQUARE TO ROUND TRANSITIONS. SPIN-IN FITTINGS AT THE END OF CAPPED DUCTS ARE NOT ACCEPTABLE.

7. DUCT DIMENSIONS SHOWN ARE INSIDE CLEAR DIMENSION.

8. USE 45° ENTRY, LOW LOSS TAP/FITTING WITH QUADRANT AND EXTRACTOR IN ALL DUCT TAKE-OFFS. PROVIDE WITH 2" BUILD-OUT FOR LOCKING QUADRANT ON INSULATED DUCT.

9. PROVIDE A MANUAL DAMPER IN ALL RUNOUTS TO EACH DIFFUSER, GRILLE, AND DEDICATED OUTDOOR AIR DUCT RUNOUTS. ADD MANUAL VOLUME DAMPERS AS RECOMMENDED BY T&B INITIAL SURVEY. (OBD AT DIFFUSER NOT ALLOWED)

10. ALL SUPPLY, RETURN, OR EXHAUST DUCT RUNOUTS TO GRILLES AND DIFFUSERS ARE TO BE THE SAME SIZE AS GRILLE NECK UNLESS NOTED OTHERWISE.

11. ALL SLOT DIFFUSERS TO HAVE 2-WAY AIR FLOW PATTERNS & ALL 24"x24" DIFFUSERS TO HAVE 4-WAY AIR FLOW PATTERNS UNLESS INDICATED OTHERWISE ON DRAWINGS.

12. VERIFY LOCATION OF ALL THERMOSTAT AND FAN SWITCH LOCATIONS WITH THE ARCHITECT. MOUNT BOTTOM OF ALL THERMOSTATS 3' 4" ABOVE FINISHED FLOOR UNLESS NOTED OTHERWISE. SPACES WITH CO2 SENSORS SHALL MOUNT THE CO2 SENSOR ABOVE THE THERMOSTAT.

13. CONDENSATE LINES ARE TO BE TRAPPED AND SLOPED 1/8 " PER FOOT IN HORIZONTAL RUNS, AND TERMINATE ABOVE A DRAIN OR RECEPTOR.

14 .COORDINATE VOLTAGE AND PHASE OF ALL MECHANICAL EQUIPMENT WITH ELECTRICAL CONTRACTOR BEFORE SUBMITTING SHOP DRAWINGS OR ORDERING EQUIPMENT.

15. COORDINATE LOCATION & PROVIDE ALL ACCESS DOORS OR PANELS FOR VALVES, DAMPERS, OR ANY OTHER EQUIPMENT REQUIRING SERVICE ACCESS.

16. ALL ELECTRICAL DISCONNECT SWITCHES FOR MECHANICAL EQUIPMENT ARE TO BE PROVIDED AND INSTALLED BY DIVISION 23. THIS INFORMATION SHALL BE INDICATED ON SHOP DRAWINGS.

17. ON SQUARE & RECTANGULAR DUCTWORK, ALL MITERED ELBOWS AND BULL HEAD TEES ARE TO BE CONSTRUCTED WITH SINGLE-THICKNESS VANES (1.5" VANE SPACING) WITH A FITTING LOSS COEFFICIENT OF 0.11 OR LESS.

18. REFER TO ARCHITECTURAL PLANS AND REFLECTED CEILING PLANS TO COORDINATE ACTUAL LOCATIONS OF MECHANICAL EQUIPMENT WITH LAYOUT OF WALLS, PARTITIONS AND LOCATIONS OF CEILING MOUNTED DEVICES.

19. FOLLOW MANUFACTURER'S RECOMMENDATIONS AND WRITTEN INSTRUCTIONS FOR THE INSTALLATION OF ALL EQUIPMENT, MATERIALS AND ASSEMBLIES INDICATED ON THESE CONTRACT DOCUMENTS. SHOULD CONFLICTS ARISE BETWEEN THESE DOCUMENTS, CODE REQUIREMENTS AND MANUFACTURER'S INSTRUCTIONS, THE MORE STRINGENT REQUIREMENT ARE TO GOVERN.

20. COORDINATE WORK WITH THAT OF ALL OTHER TRADES TO ELIMINATE INTERFERENCE'S. EXAMINE IN ADVANCE THE LOCATION OF ELECTRICAL SYSTEMS, DUCTS, PIPING, STRUCTURES, CONDUITS AND OTHER EQUIPMENT AND COMPONENTS TO BE INSTALLED AND PROPERLY COORDINATE THE INSTALLATION OF MECHANICAL WORK TO AVOID INTERFERENCE'S BEFORE FABRICATING AND INSTALLING WORK. DETERMINE ALL DIMENSIONS BY ACTUAL FIELD CONDITIONS, MEASUREMENTS FROM MANUFACTURER'S CERTIFIED PRINTS AND COORDINATION WITH OTHER TRADES AND TO MODIFY, OFFSET OR OTHERWISE ACCOMMODATE ALL EQUIPMENT TO THE STRUCTURE, UTILITIES AND OTHER EQUIPMENT.

21. SUPPORT AND FASTEN ALL DUCTWORK, EQUIPMENT, ETC. SECURELY IN PLACE. SPACE, SECURE AND ADJUST HANGERS AND DUCTS, WITHOUT DEFLECTION OR SAG. CHAIN, STRAP, PERFORATED STRAP, WIRE HANGERS, OR WOOD PLUGS ARE PROHIBITED.

22. ITEMS SPECIFIED HEREIN BY MANUFACTURER AND MODEL NUMBER ARE TO BE CONSIDERED THE MINIMUM QUALITY ACCEPTABLE FOR THE SPECIFIED APPLICATION AND ESTABLISH A STANDARD OF REQUIRED FUNCTION, DIMENSION, APPEARANCE, SERVICEABILITY, AVAILABILITY OF SPARE PARTS AND QUALITY TO BE MET BY ANY PROPOSED SUBSTITUTION. FOR SUBSTITUTIONS, IT IS TO BE THE RESPONSIBILITY OF THE CONTRACTOR TO PROVIDE SUFFICIENT INFORMATION TO ESTABLISH "OR EQUAL" STATUS, IN THE DESIGN ENGINEER'S OPINION AND TO COORDINATE INSTALLATION OF THE AVAILABLE SPACE. INCREASED COSTS TO THE PROJECT ASSOCIATED WITH CONTRACTOR SUBSTITUTIONS SHALL BE THE RESPONSIBILITY OF THE CONTRACTOR.

23. MAKE ALL NECESSARY TESTS, TRIAL OPERATIONS, ETC. REQUIRED TO PROVE THAT ALL SYSTEMS ARE IN COMPLETE SERVICEABLE CONDITION AND WILL FUNCTION AS INTENDED. ALL COSTS OF TEST SHALL BE BORNE BY THIS CONTRACTOR. SHOULD TEST REVEAL ANY DEFECTIVE MATERIAL OR WORKMANSHIP, SUCH WORK SHALL BE REPLACED AND TESTS REPEATED. ALL CORRECTIONS SHALL BE MADE USING NEW MATERIALS.

24. FURNISH ALL NECESSARY ASSISTANCE AS DIRECTED BY THE OWNER WHICH MAY BE REQUIRED TO PROPERLY INSTRUCT THE OWNER IN THE OPERATION OF ALL EQUIPMENT. THIS SHALL INCLUDE PERSONAL INSTRUCTION COVERING ROUTINE MAINTENANCE AND OPERATION OF EQUIPMENT.

25. OPERATING AND MAINTENANCE MANUALS FOR ALL EQUIPMENT SHALL INCLUDE BUT ARE NOT LIMITED TO THE FOLLOWING:INCLUDING NECESSARY CUT SHEETS, CHARTS, WRITTEN INSTRUCTIONS, WIRING DIAGRAMS, FINAL AS-BUILT DRAWINGS WITH BALANCED AIR FLOWS INDICATED ETC. THESE MAINTENANCE INSTRUCTIONS SHALL BE BOUND IN SUITABLE HARD BACK RING BIDDERS, PROPERLY INDEXED, AND DELIVERED TO THE OWNER AND ARCHITECT.

26. SUBMITTALS SHALL COMPLY WITH THE REQUIREMENTS OF SPECIFICATION SECTION 013300. SUBMITTAL'S SHALL INCLUDE BUT ARE NOT LIMITED TO THE FOLLOWING:

PRODUCT DATA-
PERFORMANCE DATA AT DESIGN CONDITIONS, PUMP CURVES, FAN CURVES, WEIGHT, MATERIALS OF CONSTRUCTION, GAUGES, OPTIONS AND ACCESSORIES.

SHOP DRAWINGS-
DIMENSIONS, WEIGHT DISTRIBUTION, REQUIRED CLEARANCES, METHOD OF ASSEMBLY, LOCATION SIZES AND UTILITY REQUIREMENTS OF ALL CONNECTIONS.

WIRING DIAGRAMS-
ELECTRICAL POWER REQUIREMENTS AND ASSOCIATED ELECTRICAL LOADS, LADDER DIAGRAMS INDICATING CONTROL LOGIC, DIFFERENTIATE BETWEEN FACTORY AND FIELD WIRING.

27. MAINTAIN AN ACCURATE SET OF RECORD DRAWINGS ON-SITE AT ALL TIMES DURING CONSTRUCTION WHICH SHALL BE AVAILABLE FOR EXAMINATION BY THE OWNER'S REPRESENTATIVE UPON REQUEST. PROVIDE THE OWNER WITH A COMPLETE MARKED-UP SET OF THE CONTRACT DRAWINGS AT PROJECT COMPLETION.

28. CORRECT ANY DEFECTS IN WORKMANSHIP AND/OR MATERIAL WHICH OCCUR DURING THE FIRST YEAR OF OPERATION. CERTIFICATE WILL COMMENCE ON THE DATE OF ACCEPTANCE OF WORK BY OWNER. SUBMIT WRITTEN CERTIFICATE WITH MAINTENANCE DATA. THE CONTRACTOR SHALL PROVIDE A WRITTEN MANUFACTURER'S WARRANTY ON ALL PARTS AND LABOR FOR A PERIOD OF 1 YEAR FROM THE DATE OF SUBSTANTIAL COMPLETION. WHERE INDICATED, PROVIDE EXTENDED WARRANTIES FOR PERIODS INDICATED.

29. ALL EQUIPMENT FURNISHED SHALL BE UL APPROVED AND SHALL BE LABELED OR LISTED BY UL.

30. REESTABLISH THE INTEGRITY OF ALL RATED ASSEMBLIES IN WHICH HIS WORK REQUIRES ALTERATION OR MODIFICATION.

31. FRAME AND SEAL ALL DUCT PENETRATIONS THROUGH WALLS AND FLOORS AND ROOF.

32. MATERIAL SHALL BE NEW AND MADE BY AN APPROVED MANUFACTURER. PIPING SHALL BE INSTALLED SO THAT IT CAN BE COMPLETELY DRAINED. EQUIPMENT AND MATERIALS SHALL BE INSTALLED, ERECTED OR APPLIED WITH THE BEST ENGINEERING OR CONSTRUCTION PRACTICE. MANUFACTURER'S INSTALLATION INSTRUCTIONS SHALL BE OBSERVED, AS WELL AS ANY SPECIFIC INSTRUCTIONS GIVEN BY THE OWNER. ALL SUBSTANDARD WORK INSTALLED BY THIS CONTRACTOR SHALL BE REPLACED BY THIS CONTRACTOR AT NO ADDITIONAL EXPENSE TO THE OWNER. IF THIS CONTRACTOR DAMAGES EXISTING WORK, HE SHALL PAY THE COST OF REPLACEMENT OF THE DAMAGED WORK AT NO ADDITIONAL EXPENSE TO THE OWNER.

33. CLEANING AGENTS SHALL BE COMPATIBLE WITH THE SYSTEM BEING CLEANED. PRIOR TO ERECTION, INSPECT AND CLEAN AS REQUIRED TO REMOVE SAND, DIRT AND SCALE. PRIOR TO FLUSHING SYSTEM, CONTROL VALVES, RUPTURE DISCS, ETC. THAT MAY BE DAMAGED BY CLEANING SHALL BE REMOVED AND REPLACED WITH SPOOL PIECES, PLUGS, ETC. REMOVED ITEMS SHALL BE CLEANED SEPARATELY. NEW PIPE SHALL BE VALVED OFF FROM EXISTING, THEN FILLED AS REQUIRED. ALLOW SYSTEM TO BE FILLED COMPLETELY. THEN DRAIN COMPLETELY. CONTRACTOR SHALL INSTALL DRAINS AS REQUIRED TO ENSURE COMPLETE DRAINAGE OF SYSTEM. ALL DAMAGE OR DISCOLORATION OF EQUIPMENT OR THE BUILDING DUE TO FAILURE TO CLEAN UP THOROUGHLY OR FLUSH OUT PIPING PROPERLY SHALL BE CORRECTED WITHOUT ADDITIONAL COST TO THE OWNER. DOMESTIC WATER LINES SHALL BE DISINFECTED IN ACCORDANCE WITH THE INTERNATIONAL PLUMBING CODE.

34. SHUT-DOWN OF EXISTING SERVICES WHICH AFFECTS THE OPERATION WITHIN THE FACILITY REQUIRED TO ACCOMMODATE CONSTRUCTION ACTIVITIES DESCRIBED HEREIN, SHALL BE SCHEDULED WITH THE OWNER'S REPRESENTATIVE AND APPROVED IN WRITING. ALL SERVICES SHALL REMAIN OPERATIONAL DURING NORMAL BUSINESS HOURS UNLESS SPECIFICALLY APPROVED OTHERWISE.

35. PIPING INSTALLATIONS SHALL BE PER CURRENT MODERN INDUSTRY METHODS. PROVIDE PIPE SLEEVE LARGE ENOUGH FOR PIPE AND INSULATION WHERE PIPE PASSES THROUGH FLOORS OR WALLS. PIPE PASSING THROUGH FIRE WALLS SHALL BE PACKED WITH A LISTED FIRE PENETRATION SYSTEM. INSTALL EQUIPMENT LEVEL AND PLUMB, PARALLEL AND PERPENDICULAR TO OTHER BUILDING SYSTEMS AND COMPONENTS IN EXPOSED INTERIOR SPACES, EXCEPT WHERE OTHERWISE INDICATED.

36. CONTRACTOR IS RESPONSIBLE FOR ANY CUTTING AND PATCHING REQUIRED WHICH IS INCIDENTAL TO THE INSTALLATION OF HIS WORK. CUT, CHANNEL, CHASE AND DRILL FLOORS, WALLS, PARTITIONS, CEILINGS, AND OTHER SURFACES NECESSARY FOR PIPING INSTALLATIONS AFTER COORDINATING w/ OTHER TRADES. PERFORM CUTTING BY SKILLED MECHANICS OF THE TRADES INVOLVED. REPAIR CUT SURFACES USING MATERIALS MATCHING SPECIFIED MATERIALS AND METHODS REQUIRED FOR SURFACE. REFER TO STRUCTURAL DRAWINGS FOR DETAILS ON CONCRETE SLAB OPENINGS.

37. REFER TO ARCHITECTURAL PLANS TO VERIFY RATINGS (FIRE, FIRE/SMOKE, SMOKE) OF ALL WALLS AND FLOORS BEING PENETRATED.

38. COORDINATE ALL VOLTAGES, PHASES AND CAPACITIES WITH ELECTRICAL PLANS

39. THE INSTALLATION OF DUCT MOUNTED SMOKE DETECTORS THAT ARE NOT PART OF A LISTED SMOKE DAMPER OR FIRE SMOKE DAMPER ARE TO BE FURNISHED BY THE FIRE ALARM CONTRACTOR AND INSTALLED BY THE MECHANICAL CONTRACTOR. THESE SHALL BE WIRED TO THE FIE ALARM SYSTEM BY THE FIRE ALARM CONTRACTOR. TO DETERMINE IF SMOKE DETECTORS ARE REQUIRED, REFER TO THE ELECTRICAL FIRE ALARM PLANS.

THE INSTALLATION OF DUCT MOUNTED SMOKE DETECTORS THAT ARE PART OF A LISTED SMOKE DAMPER OR FIRE SMOKE DAMPER ARE TO BE FURNISHED AND INSTALLED BY THE MECHANICAL CONTRACTOR. THESE SHALL BE CONNECTED TO THE FIRE ALARM SYSTEM VIA ADDRESSABLE INPUT MODULES AND CONNECTED TO THE AUXILIARY CONTACTS FURNISHED WITH THE DAMPER ASSEMBLY. TO DETERMINE IF SMOKE DETECTORS ARE REQUIRED, REFER TO THE ELECTRICAL FIRE ALARM PLANS.

40. ACCESSORIES FOR EQUIPMENT THAT ARE LISTED ON SCHEDULE DRAWINGS ARE TO BE PROVIDED BY THE CONTRACTOR. THE ACCESSORIES ARE TO BE FURNISHED AND INSTALLED AS A COMPLETED OPERATING SYSTEM.

41. PROVIDE DUCT LINER FOR THE FIRST 25' DOWNSTREAM OF EACH AIR HANDLING UNIT AND FIRST 5' DOWNSTREAM OF EACH TERMINAL UNIT (SINGLE DUCT AND FAN POWERED).

42. SEE STRUCTURAL PLANS FOR LINTEL REQUIREMENTS FOR PENETRATIONS THROUGH WALLS.

43. WHERE BMS IS PRESENT OR BEING PROVIDED, SPACES SERVED BY DUCTED AND DUCTLESS SPLIT SYSTEMS THAT DO NOT HAVE BACNET CONTROLS SHALL BE PROVIDED WITH WALL MOUNTED BACNET SENSOR TO MONITOR/ALARM TEMPERATURE OF SPACE.

44. SLEEVE AND SLEEVE SEALS ARE REQUIRED FOR MECHANICAL PIPING PENETRATIONS THROUGH EXTERIOR CONCRETE WALLS ABOVE GRADE, EXTERIOR CONCRETE WALLS BELOW GRADE, CONCRETE SLABS ON GRADE, CONCRETE SLABS ABOVE GRADE AND INTERIOR PARTITIONS. REFER TO PROJECT SPECIFICATIONS.

45. CONTRACTOR SHALL PROVIDE 1/4-INCH SCALE PROJECT SPECIFIC COORDINATION DRAWINGS. COORDINATION DRAWINGS AND PLANS AND OTHER DETAILS SHALL BE DRAWN TO SCALE, ON WHICH THE FOLLOWING ITEMS ARE SHOWN AND COORDINATED WITH EACH OTHER, USING INPUT FROM INSTALLERS OF THE ITEMS INVOLVED INCLUDING BUT NOT LIMITED TO: MECHANICAL EQUIPMENT, DUCTWORK, INSULATION, ALL PIPING, ELECTRICAL DISCONNECTS, ETC. COORDINATION DRAWINGS SHALL INCLUDE ALL MANUFACTURERS REQUIRED CLEARANCES AS WELL AS CODE REQUIRED CLEARANCES.

46. WHERE BI-POLAR IONIZATION IS BEING USED, THE CONTRACTOR IS TO PROVIDE AN INDEPENDENT THIRD PARTY INSPECTION OF ALL BI-POLAR IONIZATION UNITS LOCATED IN AIR HANDLING SYSTEMS. THIS INSPECTION TO BE SCHEDULED FOR ONE YEAR AFTER SUBSTANTIAL PROJECT COMPLETION. PROVIDE A COMPLETE REPORT OF FINDINGS TO THE OWNER AND ENGINEER OF RECORD.

1 2 3 4 5 6 7

ssoe®
S&W

PROFESSIONAL SEALS:

SOUTH CAROLINA SSOE, INC No. 746 CERTIFICATE OF AUTHORIZATION

SOUTH CAROLINA LICENSED PROFESSIONAL ENGINEER 8/6/21 NO. 25453 WESLEY G. BROWN

CONSULTANTS:

SUBMITTAL/REVISION SCHEDULE:

NO.	DATE	DESCRIPTION
	08.06.2021	CONSTRUCTION DOCUMENTS

■ APPROVED FOR CONSTRUCTION
□ NOT APPROVED FOR CONSTRUCTION

CLIENT INFORMATION:

SOUTH CAROLINA EDUCATION LOTTERY

South Carolina Education Lottery®

CLIENT PROJECT #: 20048.00
SCEL PROJECT #: Y20-N001-CB

PROJECT INFORMATION:

4TH FLOOR UPFIT

1333 MAIN STREET
COLUMBIA, SC 29201

SSOE/SW PROJECT #: 021-00531-00
SSOE/SW MANAGER: WESLEY BROWN

ssoe® | STEVENS & WILKINSON
1501 Main Street, Suite 730
Columbia, SC 29201
T. (803) 765-0320

THIS DRAWING IS THE PROPERTY OF SSOE | STEVENS & WILKINSON. UNAUTHORIZED USE OF ANY KIND, INCLUDING USE ON OTHER PROJECTS, IS PROHIBITED.
© SSOE, INC. 2021

HVAC GENERAL

M0.01

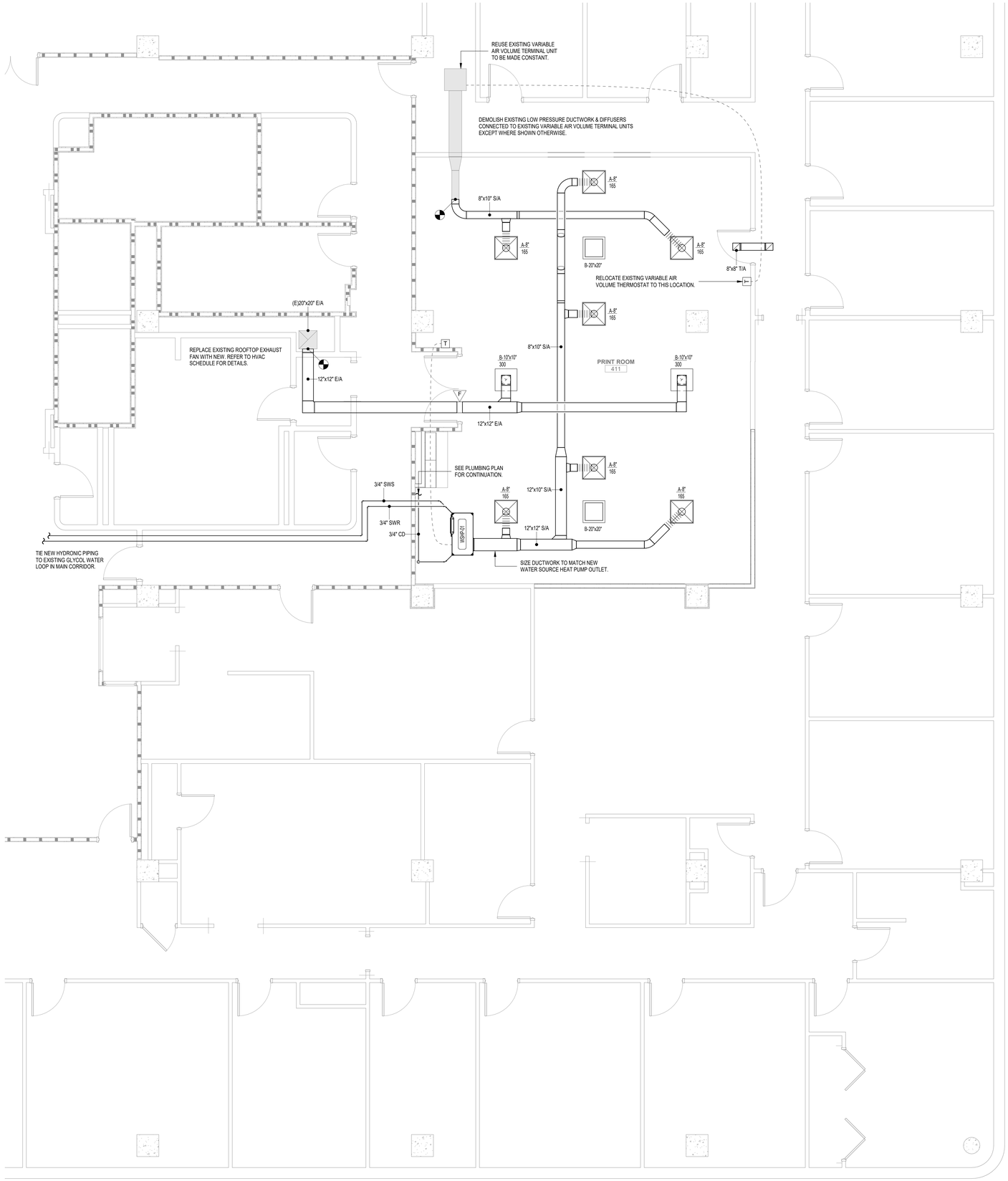

1 LEVEL 4 HVAC PLAN
1/4" = 1'-0"
0 2 4 8

TRUE NORTH
PROJECT NORTH

C:\Autodesk\Revit\2004800 - Mech - SC Education Lottery Upfit - Adjusted Scope - V19.2_cwilkes@ssoe.com.rvt :FILE PATH
10/20/2021 3:21:25 PM :PRINT DATE

PROFESSIONAL SEALS:

SOUTH CAROLINA CERTIFICATE OF AUTHORIZATION SSOE, INC No. 746

SOUTH CAROLINA PROFESSIONAL ENGINEER NO. 25453 WESLEY G. BROWN 5/6/21

CONSULTANTS:

SUBMITTAL/REVISION SCHEDULE:

NO.	DATE	DESCRIPTION
	08.06.2021	CONSTRUCTION DOCUMENTS

■ APPROVED FOR CONSTRUCTION
□ NOT APPROVED FOR CONSTRUCTION

CLIENT INFORMATION:

SOUTH CAROLINA EDUCATION LOTTERY

CLIENT PROJECT #:	20048.00
SCEL PROJECT #:	Y20-N001-CB

PROJECT INFORMATION:

4TH FLOOR UPFIT

1333 MAIN STREET
COLUMBIA, SC 29201

SSOE/SW PROJECT #:	021-00531-00
SSOE/SW MANAGER:	WESLEY BROWN

SSOE | STEVENS & WILKINSON
1501 Main Street, Suite 730
Columbia, SC 29201
T. (803) 765-0320

THIS DRAWING IS THE PROPERTY OF SSOE | STEVENS & WILKINSON. UNAUTHORIZED USE OF AMP AND INCLUDING USE ON OTHER PROJECTS, IS PROHIBITED.
© SSOE, INC. 2021

LEVEL 4 HVAC PLAN

M1.41

NOTES:
1. REFER TO HVAC FLOOR PLANS FOR DUCT SIZES
2. REFER TO SCHEDULES FOR GRILLES, REGISTERS, DIFFUSERS AND TERMINAL SIZES AND TYPES
3. PROVIDE A MANUAL TYPE BALANCING DAMPER FOR EACH SUPPLY OUTLET AND RETURN INLET
4. ALL DUCT RUNOUTS TO DIFFUSERS SHALL BE THE SAME SIZE AS DIFFUSER NECK SIZE, UNLESS OTHERWISE NOTED
5. FLEX DUCT WILL NOT BE ALLOWED ON RETURN OR EXHAUST DUCTWORK SYSTEMS
6. PROVIDE 12" AIR CUSHION AT THE END OF EACH SUPPLY MAIN AND BRANCH DUCT
7. INDIVIDUAL BRANCH BALANCING DAMPERS NOT REQUIRED FOR SUPPLY OR EXHAUST REGISTERS

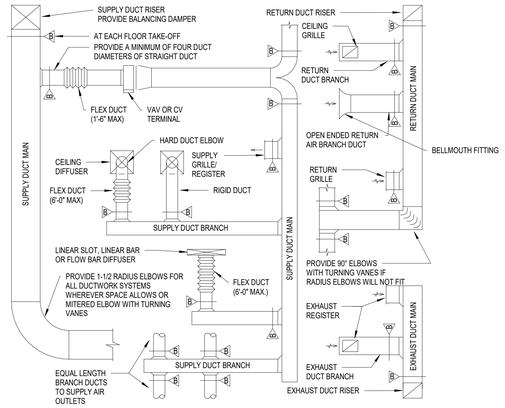

1 DUCTWORK INSTALLATION DIAGRAM
NOT TO SCALE

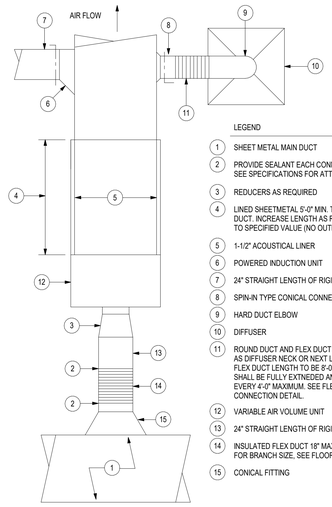

LEGEND

1. SHEET METAL MAIN DUCT
2. PROVIDE SEALANT EACH CONNECTION POINT. SEE SPECIFICATIONS FOR ATTACHMENTS .
3. REDUCERS AS REQUIRED
4. LINED SHEETMETAL 5'-0" MIN. THRU ELLS OR STRAIGHT DUCT. INCREASE LENGTH AS REQ'D. TO REDUCE NOISE TO SPECIFIED VALUE (NO OUTLETS IN THIS SECTION)
5. 1-1/2" ACOUSTICAL LINER
6. POWERED INDUCTION UNIT
7. 24" STRAIGHT LENGTH OF RIGID S/M DUCT
8. SPIN-IN TYPE CONICAL CONNECTION WITH MVD
9. HARD DUCT ELBOW
10. DIFFUSER
11. ROUND DUCT AND FLEX DUCT SAME SIZE AS DIFFUSER NECK OR NEXT LARGER SIZE. FLEX DUCT LENGTH TO BE 8'-0" MAX. DUCT SHALL BE FULLY EXTNEDED AND SUPPORTED EVERY 4'-0" MAXIMUM. SEE FLEXIBLE DUCT CONNECTION DETAIL.
12. VARIABLE AIR VOLUME UNIT
13. 24" STRAIGHT LENGTH OF RIGID S/M DUCT
14. INSULATED FLEX DUCT 18" MAX. LENGTH FOR BRANCH SIZE. SEE FLOOR PLAN.
15. CONICAL FITTING

2 VAV TERMINAL UNIT & DIFFUSER CONNECTION
NOT TO SCALE

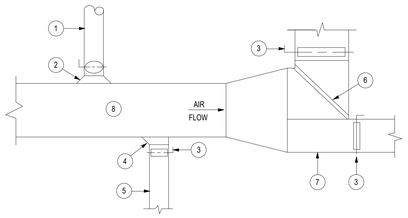

LEGEND

1. ROUND BRANCH DUCT
2. CONICAL SPIN IN (NO SCOOP)
3. MANUAL DAMPER, ALL BRANCHES
4. 45° THROAT
5. RECTANGULAR BRANCH DUCT
6. TURNING VANES, SEE SPECIFICATIONS
7. TRUNK DUCTWORK

3 TYPICAL DUCTWORK BRANCH TAKEOFF
NOT TO SCALE

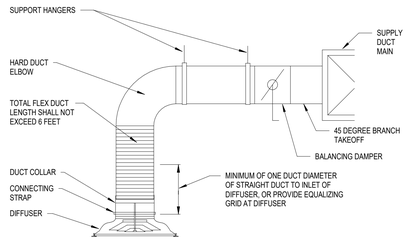

4 DIFFUSER FLEXIBLE DUCT CONNECTION
NOT TO SCALE

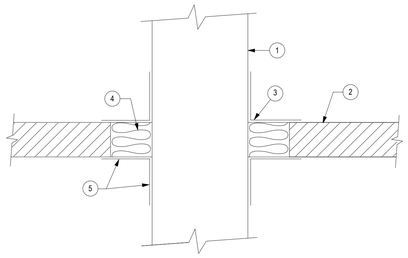

NOTES:

1. DUCT THROUGH FLOORS REQUIRE CONCRETE CURB NOT SHOWN.
2. FIRE WALL OR FLOOR PENETRATION. SEE SPECIFICATIONS FOR FIRE STOPPING AND ACOUSTICAL SEALANT.

LEGEND

1. DUCT
2. WALL, FLOOR, PARTITION, ETC.
3. SHEETMETAL MOUNTING ANGLE ALL AROUND
4. VOID SHALL BE PACKED ALL AROUND WITH MINERAL WOOL BATT
5. SEAL EACH MOUNTING ANGLE ALL AROUND WITH NON-HARDENING SEALANT

5 DUCT THROUGH STRUCTURE
NOT TO SCALE

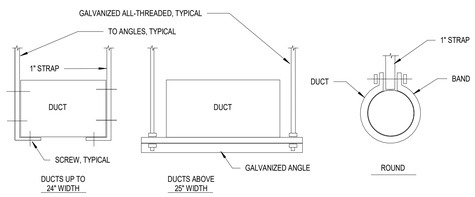

6 DUCTWORK HANGERS
NOT TO SCALE

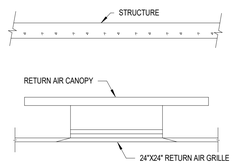

7 PLENUM RETURN AIR GRILLE CANOPY
NOT TO SCALE

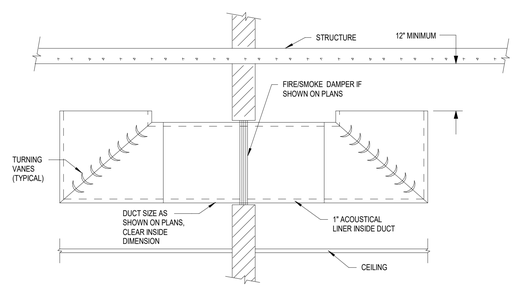

8 PLENUM AIR TRANSFER DUCT
NOT TO SCALE

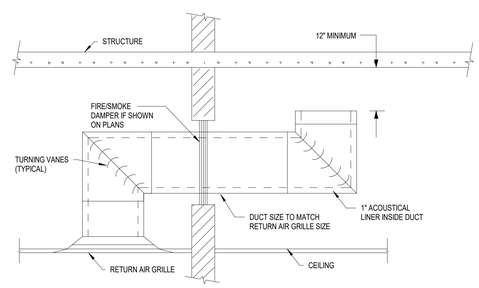

9 PLENUM TRANSFER DUCT WITH RETURN AIR GRILLE
NOT TO SCALE

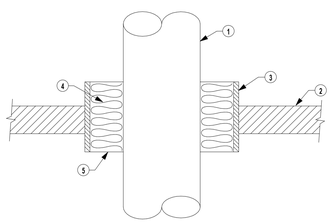

NOTES:

1. PIPES THRU FLOORS REQUIRE CONCRETE CURB NOT SHOWN.
2. FIRE WALL OR FLOOR PENETRATION. SEE SPECIFICATION FOR FIRE STOPPING AND ACOUSTICAL SEALANT.

LEGEND

1. PIPE
2. WALL, FLOOR, PARTITION, ETC.
3. STEEL PIPE SLEEVE
4. VOID SHALL BE PACKED ALL AROUND WITH MINERAL WOOL BATT
5. SEAL EACH MINERAL WOOL SURFACE WITH NON-HARDENING SEALANT MINIMUM 1" DEPTH

10 PIPE THROUGH STRUCTURE
NOT TO SCALE

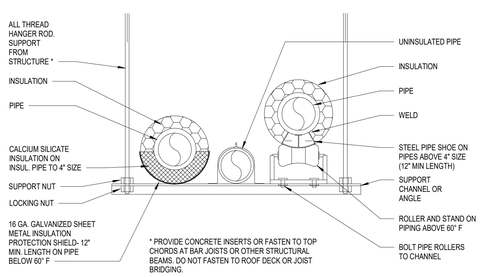

* PROVIDE CONCRETE INSERTS OR FASTEN TO TOP CHORDS AT BAR JOISTS OR OTHER STRUCTURAL BEAMS. DO NOT FASTEN TO ROOF DECK OR JOIST BRIDGING.

11 TRAPEZE PIPE HANGER
NOT TO SCALE

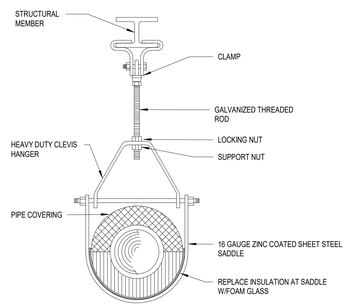

SIZE HANGER AND CLAMP TO ADEQUATELY SUPPORT LOAD (REFER TO MANUFACTURER'S GUIDELINES AND SPECIFICATIONS.)

12 PIPE HANGER
NOT TO SCALE

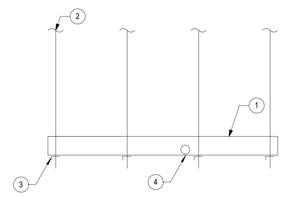

LEGEND

1. DRAIN PAN, 1-1/2" DEEP 18 GAUGE GALVANIZED SHEETMETAL WITH WELDED CORNERS AND SEAMS. SIZED TO COVER AND EXTEND 3" BEYOND THE AREA BELOW UNIT FAN COIL SECTION. PIPING CONNECTIONS AND VALVES.
2. PAN SUPPORTS, SUPPORT INDEPENDENTLY FROM EQUIPMENT.
3. REINFORCING ANGLES, TYP.
4. 3/4" AUXILLARY DRAIN LINE, EXTEND TO NEAREST FLOOR OR HUB DRAIN.

13 DRAIN PAN
NOT TO SCALE

FOR POSITIVE PRESSURE
L= H + J + PIPE DIA. WHERE:
H= 1/2 INCH (MINIMUM)
J= 1/2 INCH PLUS THE UNIT POSITIVE STATIC PRESSURE AT COIL DISCHARGE (LOADED FILTERS)
FOR NEGATIVE PRESSURE
L= H + J + PIPE DIA. WHERE:
H= 1 INCH FOR EACH INCH OF NEGATIVE PRESSURE PLUS 1 INCH.
J= 1/2 H

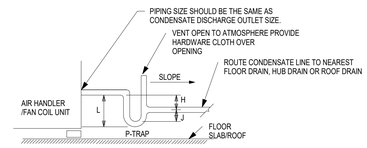

14 CONDENSATE DRAIN PIPING
NOT TO SCALE

ssoe®

S&W

PROFESSIONAL SEALS:

SOUTH CAROLINA CERTIFICATE OF AUTHORIZATION SSOE, INC No. 746

SOUTH CAROLINA PROFESSIONAL ENGINEER NO. 25453 WESLEY G. BROWN 8/6/21

CONSULTANTS:

SUBMITTAL/REVISION SCHEDULE:

NO.	DATE	DESCRIPTION
	08.06.2021	CONSTRUCTION DOCUMENTS

■ APPROVED FOR CONSTRUCTION
□ NOT APPROVED FOR CONSTRUCTION

CLIENT INFORMATION:

SOUTH CAROLINA EDUCATION LOTTERY

South Carolina Education Lottery®

CLIENT PROJECT #:	20048.00
SCEL PROJECT #:	Y20-N001-CB

PROJECT INFORMATION:

4TH FLOOR UPFIT

1333 MAIN STREET
COLUMBIA, SC 29201

SSOE/SW PROJECT #:	021-00531-00
SSOE/SW MANAGER:	WESLEY BROWN

SSOE | STEVENS & WILKINSON
1501 Main Street, Suite 730
Columbia, SC 29201
T. (803) 765-0320

THIS DRAWING IS THE PROPERTY OF SSOE | STEVENS & WILKINSON. UNAUTHORIZED USE OF ANY KIND, INCLUDING USE ON OTHER PROJECTS, IS PROHIBITED.
© SSOE, INC. 2021

HVAC DETAILS

M5.01

C:\Autodesk\Revit\2004800 - Mech - SC Education Lottery Upfit - Adjusted Scope - V19.2_cwilkes@ssoe.com.rvt :FILE PATH
10/20/2021 3:21:27 PM :PRINT DATE

WATER SOURCE HEAT PUMPS

UNIT TAG	MANUFACTURER	MODEL	FAN CHARACTERISTICS			COIL PERFORMANCE					UNIT EFFICIENCY		VOLTAGE / PHASE	NOTES
			AIRFLOW	EXTERNAL STATIC PRESSURE	MOTOR HORSEPOWER	NOMINAL CAPACITY	FLUID FLOW RATE	NET COOLING CAPACITY	NET SENSIBLE CAPACITY	NET HEATING CAPACITY	EER	COP		
			CFM	IN WG	HP	TON	GPM	MBH	MBH	MBH				
WSHP-01	TRANE	DXHF0244	836	0.50	0.33	2.0	3.6	25.1	19.1	31.7	17.7	5.4	460 / 3	1-9

NOTES:
1. PROVIDE WITH SINGLE POINT POWER ELECTRICAL CONNECTION.
2. PROVIDE WITH TWO-STAGE HEATING & COOLING.
3. PROVIDE WITH 2 INCH MERV 8 FILTER.
4. PROVIDE WITH FUSED DISCONNECT SWITCH OR CIRCUIT BREAKER SIZED FOR MAXIMUM OVERCURRENT PROTECTION.
5. PROVIDE WITH FLEXIBLE CONNECTION FOR SUPPLY AIR DUCTWORK.
6. PROVIDE WITH AUXILARY DRAIN PAN & OVERFLOW SWITCH. SET OVERFLOW SWITCH TO SHUT DOWN UNIT AT WATER LEVEL BELOW UNIT.
7. PROVIDE WITH INSULATION FOR HYDRONIC PIPING.
8. PROVIDE WITH HOSE KIT & ASSOCIATED PUMP.
9. PROVIDE WITH 24 VOLT INDEPENDENT CONTROLS.

EXHAUST FANS

UNIT TAG	MANUFACTURER	MODEL	AIRFLOW	TOTAL EXTERNAL STATIC PRESSURE	OPERATING POWER	MOTOR HORSEPOWER	DRIVE TYPE	SONES	VOLTAGE / PHASE	NOTES
			CFM	IN WG	BHP	HP				
EF-10	GREENHECK	GB-200	4000	1.0	1.44	1 1/2	BELT	15.2	460 / 3	1-2

NOTES:
1. PROVIDE WITH MEANS OF DISCONNECT.
2. PROVIDE WITH BACKDRAFT DAMPER.

GRILLES / REGISTERS / DIFFUSERS

SYMBOL	MANUFACTURER	MODEL	MOUNTING	TYPE	FRAME SIZE / TYPE	NECK	FINISH	USE	MATERIAL	NOTES
A	PRICE	SPO	PER ARCHITECTURAL CEILING TYPE	SQUARE PLAQUE DIFFUSER	24"X24"	ROUND	WHITE	SUPPLY	STEEL	1-3
B	PRICE	PDDR	PER ARCHITECTURAL CEILING TYPE	PERFORATED GRILLE	24"X24"	SEE PLAN	WHITE	RETURN / EXHAUST / TRANSFER	STEEL	1-2

NOTES:
1. PROVIDE WITH SQUARE TO ROUND NECK ADAPTER AS NECESSARY.
2. PROVIDE WITH FRAME COMPATIBLE FOR CEILING SYSTEM AS SHOWN ON ARCHITECTURAL REFLECTED CEILING PLAN.
3. PROVIDE WITH MANUFACTURER INSULATED BACKPAN.

PROFESSIONAL SEALS:

SOUTH CAROLINA CERTIFICATE OF AUTHORIZATION SSOE, INC No. 746

SOUTH CAROLINA PROFESSIONAL ENGINEER NO. 25453 WESLEY G. BROWN 5/6/21

CONSULTANTS:

SUBMITTAL/REVISION SCHEDULE:

NO.	DATE	DESCRIPTION
	08.06.2021	CONSTRUCTION DOCUMENTS

■ APPROVED FOR CONSTRUCTION
□ NOT APPROVED FOR CONSTRUCTION

CLIENT INFORMATION:

SOUTH CAROLINA EDUCATION LOTTERY

CLIENT PROJECT #:	20048.00
SCEL PROJECT #:	Y20-N001-CB

PROJECT INFORMATION:

4TH FLOOR UPFIT

1333 MAIN STREET
COLUMBIA, SC 29201

SSOE/SW PROJECT #:	021-00531-00
SSOE/SW MANAGER:	WESLEY BROWN

SSOE | STEVENS & WILKINSON
1501 Main Street, Suite 730
Columbia, SC 29201
T. (803) 765-0320

THIS DRAWING IS THE PROPERTY OF SSOE | STEVENS & WILKINSON. UNAUTHORIZED USE OF ANY KIND, INCLUDING USE ON OTHER PROJECTS, IS PROHIBITED.
© SSOE, INC. 2021

HVAC SCHEDULES

M6.01

A | B | C | D | E | F | G | H | J

SEISMIC AND WIND REQUIREMENTS FOR PLUMBING SYSTEMS

INFORMATION FOR IBC-2018 /ASCE 7-16

A. EQUIPMENT, APPLIANCES AND SUPPORTS (INCLUDING ROOF CURBS & ROOF RAILS) EXPOSED TO WIND SHALL BE DESIGNED AND INSTALLED TO RESIST THE WIND PRESSURES DETERMINED IN ACCORDANCE WITH THE INTERNATIONAL BUILDING CODE. WHERE SEISMIC RESTRAINT IS REQUIRED, THE MORE DEMANDING FORCE OF WIND AND SEISMIC MUST BE USED. SEE SEISMIC INFORMATION CONTAINED IN THE STRUCTURAL DRAWINGS FOR SITE SPECIFIC INFORMATION ON SEISMIC DESIGN CATEGORY.SEE EQUIPMENT SCHEDULES AND DETAILS FOR SPECIFIC COMPONENT IMPORTANCE FACTOR DESIGNATIONS.
B. USE APPLICABLE TABLE BELOW TO DETERMINE SEISMIC RESTRAINT REQUIREMENTS FOR EACH MECHANICAL COMPONENT.
C. FOR ALL COMPONENTS REQUIRING SEISMIC RESTRAINT, THE COMPONENT SUPPORTS AND ATTACHMENTS SHALL BE DESIGNED BY A REGISTERED DESIGN PROFESSIONAL.
D. WHERE SEISMIC RESTRAINT IS REQUIRED, HOUSEKEEPING PADS NEEDED FOR THE INSTALLATION OF EQUIPMENT UNDER THIS CONTRACT MUST BE DESIGNED BY THE SEISMIC ENGINEER. DO NOT POUR ANY HOUSEKEEPING PADS PRIOR TO THE THE RECEIPT OF THE SEISMIC SUBMITTAL.
E. SEISMIC RESTRAINTS FOR PIPING MUST BE SHOWN ON LAYOUT DRAWINGS SHOWING SPECIFIC RESTRAINT LOCATIONS ALONG WITH ACCOMPANYING DETAILS AND CALCULATIONS.
F. SEISMIC CATEGORY "C".

COMPONENT IMPORTANCE FACTOR (Ip) DESIGNATION	
Ip = 1.0	Ip = 1.5
• DOMESTIC WATER PIPING • SANITARY PIPING	

SEISMIC DESIGN CATEGORY C

	COMPONENT IMPORTANCE FACTOR (Ip)	
	1.0	1.5
COMPONENT IDENTIFICATION	SEISMIC RESTRAINT REQUIREMENT	SEISMIC RESTRAINT REQUIREMENT
ROOF MOUNTED	NOT REQUIRED	RESTRAIN ALL
FLOOR MOUNTED	NOT REQUIRED	RESTRAIN ALL
WALL MOUNTED	NOT REQUIRED	RESTRAIN ALL
COMPONENT SUPPORTS	NOT REQUIRED	RESTRAIN ALL
SUSPENDED EQUIPMENT	NOT REQUIRED	RESTRAIN ALL
SUSPENDED DUCTILE PIPING (STEEL, ALUMINUM, COPPER, ETC.)	NOT REQUIRED	>2" (SEE NOTE 3,4)
SUSPENDED NON DUCTILE PIPING (CAST IRON, PLASTIC, CERAMIC)	NOT REQUIRED	RESTRAIN ALL (SEE NOTE 3,4)
SUSPENDED PIPE ON TRAPEZE	NOT REQUIRED	RESTRAIN IF ANY PIPE ON TRAPEZE > 2" RESTRAIN IF TOTAL WEIGHT OF PIPES ON TRAPEZE > 10 LBS/FT (SEE NOTE 3,4)
COMPONENT CERTIFICATION (SEE NOTE 4)	NOT REQUIRED	REQUIRED

NOTES:
1. EQUIPMENT 20 LBS. OR LESS IS EXEMPT IF FLEXIBLE CONNECTIONS ARE PROVIDED BETWEEN THE COMPONENT AND ASSOCIATED PIPING AND CONDUIT.
2. RESTRAINTS ARE NOT REQUIRED IF THE COMPONENT WEIGHTS 400 LBS. OR LESS, IS MOUNTED AT 4 FT. OR LESS ABOVE A FLOOR, AND HAS FLEXIBLE CONNECTIONS BETWEEN THE COMPONENT AND ASSOCIATED PIPING AND CONDUIT.
3. RESTRAINT IS NOT REQUIRED IF THE PIPING IS SUPPORTED BY HANGERS AND EACH HANGER IN THE PIPING RUN IS 12 IN. OR LESS IN LENGTH FROM THE TOP OF THE PIPE TO THE SUPPORTING STRUCTURE. WHERE PIPES ARE SUPPORTED ON A TRAPEZE, THE TRAPEZE SHALL BE SUPPORTED BY HANGERS HAVING A LENGTH OF 12 IN. OR LESS. WHERE ROD HANGERS ARE USED, THEY SHALL BE EQUIPPED WITH SWIVELS, EYE NUTS OR OTHER DEVICES TO PREVENT BENDING IN THE ROD.
4. COMPONENT CERTIFICATION MUST BE SUPPLIED BY THE EQUIPMENT MANUFACTURER AT TIME OF SUBMITTAL FOR REVIEW BY ENGINEER OF RECORD.

DEMOLITION NOTES

1. THESE DRAWINGS ARE BASED ON EXISTING PLANS. REFER TO ARCHITECTURAL DRAWINGS FOR EXACT LOCATION OF DEMOLITION AREAS. THE CONTRACTOR SHALL THOROUGHLY INVESTIGATE THE EXISTING CONDITIONS PRIOR TO BID.

2. THE PURPOSE AND INTENT OF DEMOLITION SHEET IS TO SHOW THE CONTRACTOR ITEMS REQUIRED TO BE REMOVED, BUT IS IN NO WAY LIMITED TO THE ITEMS SHOWN. ALL BIDDERS ARE REQUIRED TO MAKE AN ON-SITE VISIT AND INSPECT EXISTING MECHANICAL CONDITIONS BEFORE FINAL BID DATE.

3. ON-SITE INSPECTIONS ARE REQUIRED TO OCCUR PRIOR TO FINAL BID DATE TO DETERMINE ALL EXISTING CONDITIONS AND COORDINATE POWER DOWN TIMES. BIDDING CONTRACTORS ARE REQUIRED TO SURVEY ALL AREAS OF THE BUILDING PRIOR TO BIDDING TO VIEW THE EXISTING CONDITIONS. ANY ADDITIONAL WORK REQUIRED OR CLARIFICATIONS TO THE WORK SHOWN THAT COULD HAVE BEEN REASONABLY VERIFIED BY THE SURVEY SHALL BE THE RESPONSIBILITY OF THE CONTRACTOR.

4. PERFORM ALL CUTTING AND DRILLING REQUIRED. PATCH ALL HOLES, PAINT AND OTHERWISE REPAIR ALL DAMAGES TO THE BUILDING STRUCTURE AND SURFACES WHICH OCCUR AS A RESULT OF THIS PROJECT. REPAIRS SHALL RESTORE THE STRUCTURE TO THE SAME CONDITION EXISTING PRIOR TO BEGINNING WORK.

5. ANY DAMAGE TO EXISTING CONDITIONS CAUSED BY DEMOLITION AND/OR NEW WORK SHALL BE REPAIRED BY THE CONTRACTOR RESPONSIBLE FOR THE DAMAGE.

6. ANY NEW OR EXISTING PIPING PASSING THROUGH A NEW OR EXISTING WALL CARRYING A FIRE RATING SHALL BE SEALED TIGHT TO THE WALL WITH A UL APPROVED METHOD.

7. ALL DEMOLITION SHALL BE PERFORMED TO PREVENT THE ARBITRARY DESTRUCTION OR INTERRUPTION OF CONCEALED UTILITIES WHICH ARE INTENDED TO REMAIN IN USE AND THE ROUTING OF WHICH CAN NOT BE PREDETERMINED UNTIL DEMOLITION IS STARTED. ALL SUCH DISCOVERIES OF UTILITIES WHICH ARE IN A DIFFERENT LOCATION FROM THAT INDICATED, CHANGE DIRECTION FROM FLOOR-TO-FLOOR, ETC. OR ARE UNIDENTIFIED, SHALL BE REPORTED TO THE ARCHITECT BEFORE REMOVAL OR DISTURBANCE.

8. REMOVE, STORE, CLEAN, REINSTALL, RECONNECT, AND MAKE OPERATIONAL EQUIPMENT INDICATED FOR RELOCATION.

9. CONTRACTOR IS RESPONSIBLE FOR MAINTAINING BUILDING SERVICES DURING DEMOLITION INCLUDING ALL TESTING, SERVICE FEES, RENTAL OF TEMPORARY EQUIPMENT OR INSTALLATION AND CONNECTION OF TEMPORARY SERVICES.

10. WHERE WALLS, FLOORS OR CEILINGS ARE CUT, REMOVED OR DAMAGED FOR INVESTIGATING EXISTING CONDITIONS, DEMOLISHING SERVICES, INSTALLING NEW SERVICES, ETC. THE CONTRACTORS SHALL COORDINATE THE PATCHING OF THE WALLS, FLOORS & CEILINGS TO MATCH EXISTING WITH THE BUILDING FINISHES CONTRACTOR AND/OR GENERAL CONTRACTOR.

11. NEW WORK SHOWN IS SUGGESTED ROUTING. CONTRACTOR SHALL FIELD INVESTIGATE EXISTING SERVICES AVAILABLE. BASED ON THE CONTRACTORS DISCOVERIES, THEY MAY SUGGEST ALTERNATE ROUTINGS. THE ENGINEER OF RECORD SHALL MAKE THE FINAL DETERMINATION ON WHETHER THE SERVICES SHALL BE INSTALLED AS SHOWN OR AS SUGGESTED BY THE CONTRACTOR.

12. WHERE PIPE, INSULATION, OR EQUIPMENT TO REMAIN IS DAMAGED OR DISTURBED, REMOVE DAMAGED PORTIONS AND INSTALL NEW PRODUCTS OF EQUAL CAPACITY AND QUALITY.

SYMBOLS

Symbol	Description
2"	PIPE SIZE TAG (DIAMETER)
	ABOVE GROUND PIPING
1/8" / 12" SLOPE	PIPE SLOPE TAG
	BELOW GROUND PIPING
INVERT: -10' - 1"	PIPE INVERT ELEVATION TAG
2" (E)	EXISTING PIPE TAG
	PIPING BEING DEMOLISHED
NG	NATURAL GAS
PG	PROPANE GAS
CWV	COMBINATION WASTE & VENT
CA	COMPRESSED AIR
CW	DOMESTIC COLD WATER
H-CW	HARD COLD WATER
S-CW	SOFT COLD WATER
F-CW	FILTERED COLD WATER
RO	REVERSE OSMOSIS WATER
HWS	HOT WATER
HW 140°	HOT WATER 140°
HWR	HOT WATER RECIRCULATION
HW-R 140°	HOT WATER RECIRCULATION 140°
GV	GREASE VENT
GW	GREASE WASTE
IW	INDIRECT WASTE
OV	OIL VENT
OW	OIL WASTE
PD	PUMP DISCHARGE
V	SANITARY VENT
SS	SANITARY SEWER
RD	STORM DRAINAGE
RSD	OVERFLOW STORM DRAINAGE
	PIPE DROP
	PIPE RISE
	PIPE TEE
	CAP
4" 4" 2" 4"	PLUG
	REDUCING 45 DEGREE TEE
	45 DEGREE TEE
	DOMESTIC WATER METER
	FLOW MEASURING AND BALANCING DEVICE
	BALL VALVE
	CHECK VALVE
	THREE WAY VALVE
	MOTORIZED CONTROL VALVE
	THREE WAY MOTORIZED CONTROL VALVE
	PRESSURE REDUCING VALVE
	SOLENOID VALVE
	BUTTERFLY VALVE
	FLOOR DRAIN FIXTURE
	DRAIN SIZE
6" FD-1	DRAIN TAG
	TYPE (SEE SCHEDULE)
	X" V UP THRU FLOOR
	ROOF DRAIN FIXTURE
	DRAIN SIZE
6" RSD / 6" RD	DRAIN TAG
	TYPE (SEE SCHEDULE)
	PLUMBING FIXTURE
HB-1	PLUMBING FIXTURE TAG
	TYPE (SEE SCHEDULE)

ABBREVIATIONS

&	AND	HYD	HYDRANT
Ø	ROUND	ID	INDIRECT
A	AIR	IN	INCH
AB	ABOVE BASE	INL	INLET
ABV	ABOVE	INSUL	INSULATION
AC	AIR CONDITIONING	INT	INTERIOR
ACOUS	ACOUSTICAL	INV	INVERT
AD	AREA DRAIN	INWG	INCHES WATER GAUGE
ADD	ADDENDUM	JT	JOINT
ADDL	ADDITIONAL	LAB	LABORATORY
AFF	ABOVE FINISHED FLOOR	LB	POUND
AFUE	ANNUAL FUEL UTILIZATION EFFICIENCY	LB/HR	POUNDS PER HOUR
AG	ABOVE GROUND	LAT	LEAVING AIR TEMPERATURE
ALT	ALTERNATE	LF	LINEAL FOOT
ALUM	ALUMINUM	LOC	LOCATION
AP	ACCESS PANEL	LP	LOW PRESSURE
APPROX	APPROXIMATE	LPG	LIQUEFIED PETROLEUM GAS
ARCH	ARCHITECT/ARCHITECTURAL	LR	LIQUID REFRIGERANT
AV	ACID RESISTANT VENT	LVR	LOUVER
AW	ACID RESISTANT WASTE	LWT	LEAVING WATER TEMPERATURE
AUTO	AUTOMATIC	M/A	MIXED AIR
BFF	BELOW FINISHED FLOOR	MAN	MANUAL
BLDG	BUILDING	MATL	MATERIAL
BLW	BELOW	MAV	MANUAL AIR VENT
BM	BEAM	MAX	MAXIMUM
BO	BY OTHER	MBD	MOTORIZED BYPASS DAMPER
BOT	BOTTOM	MBH	ONE THOUSAND BTU PER HOUR
BSMT	BASEMENT	MCF	ONE THOUSAND CUBIC FEET
BTU	BRITISH THERMAL UNITS	MCW	MAKE-UP COLD WATER
BTUH	BRITISH THERMAL UNITS PER HOUR	MD	MOTORIZED DAMPER
BTWN	BETWEEN	MECH	MECHANICAL
CAP	CAPACITY	MFR	MANUFACTURER
CB	CATCH BASIN	MH	MANHOLE
CCW	COUNTER CLOCKWISE	MIN	MINIMUM
CFCV	CONSTANT FLOW CONTROL VALVE	MISC	MISCELLANEOUS
CFM	CUBIC FEET PER MINUTE	MTR	MOTOR
CHW	CIRCULATING HOT WATER	MU/A	MAKE-UP/AIR
CI	CAST IRON	N	NECK
CLG	CEILING	NC	NOISE CRITERIA
CLG	COOLING	NC	NORMALLY CLOSED
CO	CLEAN OUT	NIC	NOT IN CONTRACT
COL	COLUMN	NO	NUMBER
COMB	COMBINATION	NO	NORMALLY OPEN
CONC	CONCRETE	NOM	NOMINAL
COND	CONDENSATE	NTS	NOT TO SCALE
CONF	CONFERENCE	O	OXYGEN
CONN	CONNECT	O/A	OUTSIDE AIR
CONST	CONSTRUCTION	OC	ON CENTER
CONT	CONTINUE/CONTINUATION	OF	OVERFLOW
CONTR	CONTRACT/CONTRACTOR	OPNG	OPENING
COORD	COORDINATE	PD	PRESSURE DROP
CTR	CENTER	PIV	POST INDICATOR VALVE
CUFT	CUBIC FEET	PLBG	PLUMBING
CV	CHECK VALVE	PR	PAIR
CW	COLD WATER	PREL	PRELIMINARY
CW	CLOCKWISE	PRESS	PRESSURE
D	DEGREE	PRIM	PRIMARY
DB	DRY BULB	PRV	PRESSURE REDUCING VALVE
DET	DETAIL	PSI	POUNDS PER SQUARE INCH
DIA	DIAMETER	PSIG	POUNDS PER SQUARE INCH GAUGE
DIAG	DIAGONAL	PW	POTABLE WATER
DISCH	DISCHARGE	PWR	POWER
DIV	DIVISION	R	DUCT RISER
DI	DEIONIZED WATER	R/A	RETURN AIR
DMPR	DAMPER	RCP	RADIANT CEILING PANEL
DN	DOWN	RD	ROOF DRAIN
DWG	DRAWING	REC	RECESSED
DW	DISTILLED WATER	RED	REDUCER
EA	EACH	REFR	REFRIGERATION
EAT	ENTERING AIR TEMPERATURE	RH	RELATIVE HUMIDITY
EL	ELBOW	REQD	REQUIRED
ELEC	ELECTRICAL	REV	REVERSE
ELEV	ELEVATION	RL/A	RELIEF AIR
EP	EXPLOSION PROOF	RM	ROOM
EQ	EQUAL	RPM	REVOLUTIONS PER MINUTE
EQUIP	EQUIPMENT	RSD	ROOF SAFETY DRAIN
EWC	ELECTRIC WATER COOLER	RW	RAIN WATER
EWT	ENTERING WATER TEMPERATURE	SF	SQUARE FOOT
E/A	EXHAUST AIR	S/A	SUPPLY AIR
EAH	EXHAUST HOOD	SAN	SANITARY
EXIST	EXISTING	SCHED	SCHEDULE
EXP	EXPANSION	SECT	SECTION
EXPJT	EXPANSION JOINT	SF	SQUARE FOOT
EXT	EXTERIOR	SD	SMOKE DAMPER
F	DEGREES FAHRENHEIT	SHT	SHEET
FCO	FLOOR CLEAN OUT	SIM	SIMILAR
FD	FLOOR DRAIN	SLV	SLEEVE
FD	FIRE DAMPER	SM	SURFACE MOUNT
FDV	FIRE DEPARTMENT VALVE	SP	STANDPIPE
FHC	FIRE HOSE CABINET	SP	STATIC PRESSURE
FL	FLOOR	SPEC	SPECIFICATION
FLEX	FLEXIBLE	SPS	STATIC PRESSURE STATION
FLG	FLANGE	SQ	SQUARE
FO	FUEL OIL	SR	SUCTION REFRIGERANT
FOV	FUEL OIL VENT	SS	STAINLESS STEEL
FOR	FUEL OIL RETURN	STD	STANDARD
FOS	FUEL OIL SUPPLY	STM	STEAM
FPM	FEET PER MINUTE	STRUCT	STRUCTURAL
FRP	FIBERGLASS REINFORCED PIPE	SUCT	SUCTION
FS	FULL SIZE	SUSP	SUSPENDED
FS	FLOOR SINK	T	THERMOSTAT
FT	FOOT/FEET	TCP	TEMPERATURE CONTROL PANEL
FTG	FOOTING	TD	TEMPERATURE DROP
FTR	FIN TUBE RADIATION	TDR	TRENCH DRAIN
FUT	FUTURE	TEFC	TOTALLY ENCLOSED FAN COOLED
GA	GAGE/GAUGE	TEMP	TEMPERATURE
GAL	GALLON	TYP	TYPICAL
GALV	GALVANIZED	UFD	UNDER FLOOR DUCT
GC	GENERAL CONTRACTOR	UG	UNDERGROUND
GEN	GENERATOR	VAC	VACUUM
GENL	GENERAL	V	VENT
GPM	GALLONS PER MINUTE	VAV	VARIABLE AIR VOLUME
GR	GRADE	VEL	VELOCITY
GW	GREASE WASTE	VENT	VENTILATION
HB	HOSE BIB	VERT	VERTICAL
HD	HEAD	VOL	VOLUME
HHWR	HYDRONIC HOT WATER RETURN	VTR	VENT THROUGH ROOF
HHWS	HYDRONIC HOT WATER SUPPLY	W	WASTE
HORZ	HORIZONTAL	WB	WET BULB
HP	HORSE POWER	WCO	WALL CLEAN OUT
HP	HIGH PRESSURE	WH	WALL HYDRANT
HTG	HEATING		
HTR	HEATER		
HW	HOT WATER		

EQUIPMENT ABBREVIATIONS

AC	AIR CONDITIONING UNIT	FP	FIRE PUMP
ACC	AIR COOLED CONDENSER	GI	GREASE INTERCEPTOR
ACCU	AIR COOLING CONDENSING UNIT	GRV	GRAVITY ROOF VENTILATOR
AFMS	AIR FLOW MEASURING STATION	H	HUMIDIFIER
AHU	AIR HANDLING UNIT	HWP	HEATING WATER PUMP
AS	AIR SEPARATOR	HX	HEAT EXCHANGER
B	BOILER	HPU	HEAT PUMP UNIT
CF	CABINET FAN	HRU	HEAT RECOVERY UNIT
CF	CHEMICAL FEEDER	ILC	INLINE CENTRIFUGAL
CFP	CHEMICAL FEEDER PUMP	PF	PROPELLER FAN
CH	CHILLER	PRV	POWER ROOF VENTILATOR
CRU	CONDENSATE RETURN UNIT	PWF	POWER WALL FAN
CT	COOLING TOWER	RE	RETURN/EXHAUST FAN
CUH	CABINET UNIT HEATER	RTU	ROOFTOP UNIT
CWP	CONDENSER WATER PUMP	SA	SHOCK ABSORBER
CHWP	CHILLED WATER PUMP	SAT	SOUND ATTENUATOR
DBP	DOMESTIC WATER BOOSTER PUMP	SEP	SEWAGE EJECTOR PUMP
DC	DUCT MOUNTED COIL	SF	SUPPLY FAN
DCP	DOMESTIC WATER CIRCULATING PUMP	SP	SUMP PUMP
EF	EXHAUST FAN	UH	UNIT HEATER
EDC	ELECTRIC DUCT COIL	US	UTILITY SET
ET	EXPANSION TANK	UV	UNIT VENTILATOR
EWH	ELECTRIC WATER HEATER	WFMS	WATER FLOW MEASURING STATION
FCU	FAN COIL UNIT	WH	WATER HEATER

NOTES

1. THESE OUTLINE SPECIFICATIONS AND ACCOMPANYING DRAWINGS DESCRIBE SCOPE OF WORK REQUIRED FOR PLUMBING SYSTEMS, LABOR, MATERIAL EQUIPMENT, MACHINERY, SUPERVISION, MANAGEMENT AND ALL OTHER ITEMS NECESSARY TO BE PROVIDED AS REQUIRED FOR A COMPLETE INSTALLATION OF ALL SYSTEMS SHOWN ON DRAWINGS AND/OR AS SPECIFIED HEREIN.

2. ALL WORK SHALL BE PERFORMED IN STRICT ACCORDANCE WITH THE LATEST EDITION OF THE INTERNATIONAL PLUMBING CODE AND BUILDING CODE, NFPA CODES, AND APPLICABLE STATE AND LOCAL CODES AND ORDINANCES. CONTRACTOR SHALL OBTAIN ALL PERMITS REQUIRED, GIVE ALL LEGAL NOTES, AND HAVE ALL WORK INSPECTED AS REQUIRED BY LOCAL OR STATE LAW.

3. DRAWINGS SHOULD BE INTERPRETED AS GENERAL LAYOUT AND ARRANGEMENT DRAWINGS. THE DRAWINGS ARE NOT INTENDED TO SHOW AND CANNOT SHOW COMPLETE OR PRECISE MEASUREMENTS AND DETAILS OF THE BUILDING AND INSTALLATION IN EVERY RESPECT, AND THEY DO NOT INCLUDE ALL DETAILS OF MANUFACTURED EQUIPMENT, CONSTRUCTION, PIPING, DUCT WORK, ETC. MEASUREMENT FIGURES WRITTEN UPON THE DRAWING SHALL BE RELIED UPON AS A DIMENSION FOR INSTALLATION PURPOSES, EXACT LOCATIONS AND MEASUREMENTS ARE TO BE DEFINED IN THE FIELD AND THE CONTRACTOR SHALL BE RESPONSIBLE FOR THEIR ACCURACY AND USE IN CONSTRUCTION OF THE WORK. COORDINATE CLOSELY WITH OWNER.

4. CONTRACTOR SHALL REFER TO THE ARCHITECTURAL DRAWINGS FOR DIMENSIONS LOCATING PLUMBING FIXTURES.

5. ALL FIXTURES, EQUIPMENT, ETC. SHALL BE INSTALLED IN STRICT ACCORDANCE WITH MANUFACTURE'S WRITTEN INSTRUCTIONS. INSTALL EQUIPMENT LEVEL AND PLUMB, PARALLEL AND PERPENDICULAR TO OTHER BUILDING SYSTEMS AND COMPONENTS IN EXPOSED INTERIOR SPACES, EXCEPT WHERE OTHERWISE INDICATED.

6. INSTALL EXPOSED PIPING FREE OF SAGS AND BENDS. PROVIDE BRACKET STANDOFFS FROM MOUNTING SURFACES SUFFICIENT TO ALLOW 1" CLEANING SPACE AROUND ALL PIPING, INCLUDING INSULATION.

7. MAKE PROPER WASTE, VENT, HOT AND COLD WATER CONNECTIONS TO ALL FIXTURES AND EQUIPMENT, EVEN THOUGH ALL BRANCHES, ELBOWS AND CONNECTIONS ARE NOT SHOWN.

8. VALVES SHALL BE PROVIDED FOR EQUIPMENT ISOLATION. PROVIDE BRAIDED STAINLESS STEEL HOSE BETWEEN VALVE AND EQUIPMENT IN ACCORDANCE WITH MANUFACTURER'S SPECIFICATIONS. LOCATE SHUT-OFF VALVE FOR EASY ACCESS SUCH THAT VALVES CAN BE REACHED WITHOUT MOVING EQUIPMENT. LOCATE UNIONS AND FLANGES TO FACILITATE EQUIPMENT INSTALLATION AND MAINTENANCE.

9. UNIONS SHALL BE PROVIDED ADJACENT TO EACH VALVE AND AT FINAL CONNECTION TO EACH PIECE OF EQUIPMENT. INSTALL DIELECTRIC COUPLINGS FOR CONNECTION OF DISSIMILAR MATERIALS. SCREW JOINT STEEL PIPING UP TO AND INCLUDING 1-1/2". WELD PIPING USING LEADFREE SOLDER FOR SOLDERING DOMESTIC WATER PIPING.

10. CONCEALED BRACKETS, HANGERS AND PLATES SHALL HAVE PRIMER COAT OF PAINT. EXPOSED PIPING AND TRIM SHALL BE HEAVY BRASS, CHROME PLATED AND FULLY PROTECTED DURING INSTALLATION. STRAP OR PADDED WRENCHES SHALL BE USED ON CHROME PLATED PIPING, FITTINGS AND VALVES.

11. CONTRACTOR SHALL REMOVE ALL DEBRIS DUE TO THIS WORK TO PROPER DISPOSAL AREAS AND SHALL CLEAN ALL EQUIPMENT AND AREAS AFFECTED BY HIS WORK AT THE END OF EACH SHIFT EACH DAY. DISPOSAL OF ALL MATERIALS SHALL BE AS DIRECTED BY THE OWNER.

12. REMOVE PIPING AND EQUIPMENT AS DELINEATED BY DRAWINGS, SPECS., DETAILS, ETC. THE DEBRIS AND ALL OTHER EQUIPMENT SHALL BE REMOVED FROM PREMISES.

13. WHERE PIPE PENETRATIONS OCCUR THAT ARE VISIBLE, INSTALL CHROME ESCUTCHEON TO COVER SLEEVE AND/OR CAULKING. MAINTAIN FLOOR AND WALL FIRE RATING INTEGRITY.

14. THE CONTRACTOR SHALL COORDINATE HIS WORK WITH THAT OF ALL OTHER TRADES TO ELIMINATE INTERFERENCE'S. THE CONTRACTOR SHALL EXAMINE IN ADVANCE THE LOCATION OF ELECTRICAL SYSTEMS, DUCTS, PIPING, STRUCTURES, CONDUITS AND OTHER EQUIPMENT AND COMPONENTS TO BE INSTALLED AND PROPERLY COORDINATE THE INSTALLATION OF MECHANICAL WORK TO AVOID INTERFERENCE'S BEFORE FABRICATING AND INSTALLING WORK. THE ENGINEERS HAVE CONSIDERED EXISTING INTERFERENCE'S IN MAKING THE DRAWINGS. BUT IT IS THE RESPONSIBILITY OF THE CONTRACTOR TO DETERMINE ALL DIMENSIONS BY ACTUAL FIELD CONDITIONS, MEASUREMENTS FROM MANUFACTURER'S CERTIFIED PRINTS AND COORDINATION WITH OTHER TRADES AND TO MODIFY, OFFSET OR OTHERWISE ACCOMMODATE ALL EQUIPMENT TO THE STRUCTURE, UTILITIES AND OTHER EQUIPMENT.

15. CONTRACTOR SHALL SUBMIT FOUR (4) COPIES OF SUBMITTAL DATA FOR PLUMBING EQUIPMENT AND MATERIALS INCLUDING FIXTURES, TRIM, PIPING, ETC. FOR APPROVAL. CLEARLY IDENTIFY ALL ITEMS. ALL FIXTURES SHALL BE FURNISHED COMPLETE WITH TRIM INCLUDING INDIVIDUAL CUT -OFF STOPS ON SUPPLY LINES.

16. THE CONTRACTOR SHALL MAINTAIN AN ACCURATE SET OF RECORD DRAWINGS ON-SITE AT ALL TIMES DURING CONSTRUCTION WHICH SHALL BE AVAILABLE FOR EXAMINATION BY THE OWNER'S REPRESENTATIVE UPON REQUEST. PROVIDE THE OWNER WITH COMPLETE MARKED- UP SET OF THE CONTRACT DRAWINGS AT PROJECT COMPLETION.

17. FLOOR DRAINS SHALL BE PROVIDED WITH TRAP GUARD.

18. COORDINATE VOLTAGE AND PHASE OF ALL PLUMBING EQUIPMENT WITH ELECTRICAL CONTRACTOR BEFORE SUBMITTING SHOP DRAWINGS OR ORDERING EQUIPMENT.

19. PROVIDE CLEAN OUTS AS REQUIRED AT EACH CHANGE OF DIRECTION OF DRAIN PIPING.

20. COORDINATE EXACT LOCATIONS AND INVERTS FOR ALL OUTSIDE UTILITIES BEFORE STARTING ANY WORK.

21. PROVIDE A UL THROUGH FIRE STOP PENETRATION SYSTEM FOR ALL PIPES THROUGH FIRE WALLS OR FLOORS.

22. IF EQUIPMENT TO BE SUPPLIED BY CONTRACTOR IS DIFFERENT THAN THAT SPECIFIED IN PLANS OR SPECIFICATION, THE CONTRACTOR SHALL BE RESPONSIBLE FOR COORDINATING WITH ALL DISCIPLINES ANY CHANGES NEEDED BECAUSE OF SIZE, WEIGHT, LOCATION, ELECTRICAL SERVICE, ETC.

23. COORDINATE LOCATION & PROVIDE ALL ACCESS DOORS OR PANELS FOR VALVES, OR ANY OTHER EQUIPMENT REQUIRING SERVICE ACCESS.

24. ALL ELECTRICAL DISCONNECT SWITCHES FOR PLUMBING EQUIPMENT SHALL BE PROVIDED BY THE PLUMBING CONTRACTOR. THIS INFORMATION SHALL BE INDICATED ON SHOP DRAWINGS.

25. ALL CAST IRON SOIL PIPE AND FITTINGS SHALL BE MARKED WITH THE COLLECTIVE TRADEMARK OF THE CAST IRON SOIL PIPE INSTITUTE (CISPI) AND BE LISTED BY NSF INTERNATIONAL.

26. CONTRACTOR SHALL INSTALL A FIRESTOP DEVICE WHERE ANY NON METALLIC PIPE PENETRATES A FIRE RATED WALL OR FLOOR.

27. CONTRACTOR SHALL MAKE ALL NECESSARY TESTS, TRIAL OPERATIONS, ETC. REQUIRED TO PROVE THAT ALL SYSTEMS ARE IN COMPLETE SERVICEABLE CONDITION AND WILL FUNCTION AS INTENDED. ADJUST FLUSH VALVES TO PROVIDE MINIMUM FLOW CAPABLE OF CLEANSING BOWLS. ALL COSTS OF TEST SHALL BE BORNE BY THIS CONTRACTOR. SHOULD TEST REVEAL ANY DEFECTIVE MATERIAL OR WORKMANSHIP, SUCH WORK SHALL BE REPLACED AND TESTS REPEATED. ALL CORRECTIONS SHALL BE MADE USING NEW MATERIALS. CONTRACTOR SHALL TEST PIPING AND PLUMBING SYSTEMS TO THE PRESSURES INDICATED IN SECTION 312 OF THE INTERNATIONAL PLUMBING CODE AND MAINTAIN PRESSURE FOR THE DURATION INDICATED.

28. AFTER ALL FIXTURES, EQUIPMENT, ETC. HAVE BEEN INSTALLED, THE ENTIRE SYSTEM SHALL BE THOROUGHLY CLEANED. ALL PIPE FITTINGS, EQUIPMENT, ETC. SHALL BE CLEANED OF PIPE JOINT COMPOUND, GREASE, METAL SHAVING, ETC., WHICH HAVE ACCUMULATED THEREON. ALL DAMAGE OR DISCOLORATION OF FIXTURES OR BUILDING DUE TO FAILURE TO CLEAN UP THOROUGHLY OR FLUSH OUT PIPING PROPERLY SHALL BE CORRECTED WITHOUT ADDITIONAL COST TO THE OWNER.

29. ALL DOMESTIC WATER LINES SHALL BE DISINFECTED IN ACCORDANCE WITH SECTION 610 OF THE INTERNATIONAL PLUMBING CODE, "DISINFECTION OF POTABLE WATER SYSTEM."

30. CONTRACTOR IS RESPONSIBLE FOR ANY CUTTING AND PATCHING REQUIRED WHICH IS INCIDENTAL TO THE INSTALLATION OF HIS WORK. CUT, CHANNEL, CHASE AND DRILL FLOORS, WALLS, PARTITIONS, CEILINGS, AND OTHER SURFACES NECESSARY FOR PIPING INSTALLATIONS. PERFORM CUTTING BY SKILLED MECHANICS OF THE TRADES INVOLVED. REPAIR CUT SURFACES USING MATERIALS MATCHING SPECIFIED MATERIALS AND METHODS REQUIRED FOR SURFACE.

31. THE PLUMBING CONTRACTOR SHALL UNCONDITIONALLY WARRANT ALL WORK TO BE FREE OF DEFECTS IN MATERIAL AND WORKMANSHIP FOR A PERIOD OF ONE (1) YEAR FROM THE DATE OF FINAL ACCEPTANCE BY THE LICENSEE AND WILL REPAIR OR REPLACE ANY DEFECTIVE WORK PROMPTLY AND WITHOUT CHARGE AND RESTORE ANY OTHER EXISTING WORK DAMAGED IN THE COURSE OF REPAIRING DEFECTIVE MATERIALS AND WORKMANSHIP.

32. ALL MODEL NUMBERS ARE GENERAL SERIES DESIGNATIONS AND SHOULD NOT BE USED FOR THE PURCHASE OF ANY EQUIPMENT. SCHEDULED CAPACITIES AND EQUIPMENT SPECIFICATIONS SHALL BE THE BASIS FOR THE PURCHASE OF ALL EQUIPMENT.

33. ACCESSORIES FOR EQUIPMENT THAT ARE LISTED ON SCHEDULE DRAWINGS ARE TO BE PROVIDED BY THE CONTRACTOR. THE ACCESSORIES ARE TO BE FURNISHED AND INSTALLED AS A COMPLETED OPERATING SYSTEM.

34. ALL SANITARY SEWER DRAIN LINES UNDER THE SLABS SHALL BE CHECKED BY CAMERA, RECORDED ON DVD, AND MUST BE REVIEWED BY THE PLUMBING ENGINEER AND OWNER, AFTER THE SLABS HAVE BEEN POURED, AND PRIOR TO THE CONSTRUCTION OF ANY WALLS. A DVD OF ALL THESE LINES MUST ALSO BE TURNED IN AT THE END OF THE PROJECT WITH THE PLUMBING CONTRACTOR'S CLOSEOUT DOCUMENTS.

35. SEE STRUCTURAL PLANS FOR LINTEL REQUIREMENTS FOR PENETRATIONS THROUGH WALLS.

36. COORDINATE WORK WITH THAT OF ALL OTHER TRADES TO ELIMINATE INTERFERENCE'S. EXAMINE IN ADVANCE THE LOCATION OF ELECTRICAL SYSTEMS, DUCTS, PIPING, STRUCTURES, CONDUITS AND OTHER EQUIPMENT AND COMPONENTS TO BE INSTALLED AND PROPERLY COORDINATE THE INSTALLATION OF PLUMBING WORK TO AVOID INTERFERENCE'S BEFORE FABRICATING AND INSTALLING WORK. DETERMINE ALL DIMENSIONS BY ACTUAL FIELD CONDITIONS, MEASUREMENTS FROM MANUFACTURER'S CERTIFIED PRINTS AND COORDINATION WITH OTHER TRADES AND TO MODIFY, OFFSET OR OTHERWISE ACCOMMODATE ALL EQUIPMENT TO THE STRUCTURE, UTILITIES AND OTHER EQUIPMENT.

37. SLEEVE AND SLEEVE SEALS ARE REQUIRED FOR PLUMBING PIPING PENETRATIONS THROUGH EXTERIOR CONCRETE WALLS ABOVE GRADE, EXTERIOR CONCRETE WALLS BELOW GRADE, CONCRETE SLABS ON GRADE, CONCRETE SLABS ABOVE GRADE AND INTERIOR PARTITIONS. REFER TO PROJECT SPECIFICATIONS.

38. INSTALL ALL EQUIPMENT PER MANUFACTURER'S INSTRUCTIONS. ALL SERVICE CLEARANCES SHALL BE MAINTAINED. NOTIFY OWNER AND ENGINEER PRIOR TO INSTALLATION IN WRITING OF ANY DEVIATIONS.

39. CONTRACTOR SHALL PROVIDE 1/4-INCH SCALE PROJECT SPECIFIC COORDINATION DRAWINGS. COORDINATION DRAWINGS AND PLANS AND OTHER DETAILS SHALL BE DRAWN TO SCALE, ON WHICH THE FOLLOWING ITEMS ARE SHOWN AND COORDINATED WITH EACH OTHER, USING INPUT FROM INSTALLERS OF THE ITEMS INVOLVED INCLUDING BUT NOT LIMITED TO: MECHANICAL EQUIPMENT, DUCTWORK, INSULATION, ALL PIPING, ELECTRICAL DISCONNECTS, ETC. COORDINATION DRAWINGS SHALL INCLUDE ALL MANUFACTURERS REQUIRED CLEARANCES AS WELL AS CODE REQUIRED CLEARANCES.

1 | 2 | 3 | 4 | 5 | 6 | 7

ssoe®

S&W

PROFESSIONAL SEALS:

SOUTH CAROLINA CERTIFICATE OF AUTHORIZATION SSOE, INC No. 746

SOUTH CAROLINA LICENSED PROFESSIONAL ENGINEER NO. 25453 WESLEY G. BROWN 8/6/21

CONSULTANTS:

SUBMITTAL/REVISION SCHEDULE:

NO.	DATE	DESCRIPTION
	08.06.2021	CONSTRUCTION DOCUMENTS

■ APPROVED FOR CONSTRUCTION
□ NOT APPROVED FOR CONSTRUCTION

CLIENT INFORMATION:

SOUTH CAROLINA EDUCATION LOTTERY

South Carolina Education Lottery ®

CLIENT PROJECT #:	20048.00
SCEL PROJECT #:	Y20-N001-CB

PROJECT INFORMATION:

4TH FLOOR UPFIT

1333 MAIN STREET
COLUMBIA, SC 29201

SSOE/SW PROJECT #:	021-00531-00
SSOE/SW MANAGER:	WESLEY BROWN

ssoe® | STEVENS & WILKINSON
1501 Main Street, Suite 730
Columbia, SC 29201
T. (803) 765-0320

THIS DRAWING IS THE PROPERTY OF SSOE | STEVENS & WILKINSON. UNAUTHORIZED USE OF ANY KIND, INCLUDING USE ON OTHER PROJECTS, IS PROHIBITED.
© SSOE, INC. 2021

PLUMBING GENERAL

P0.01

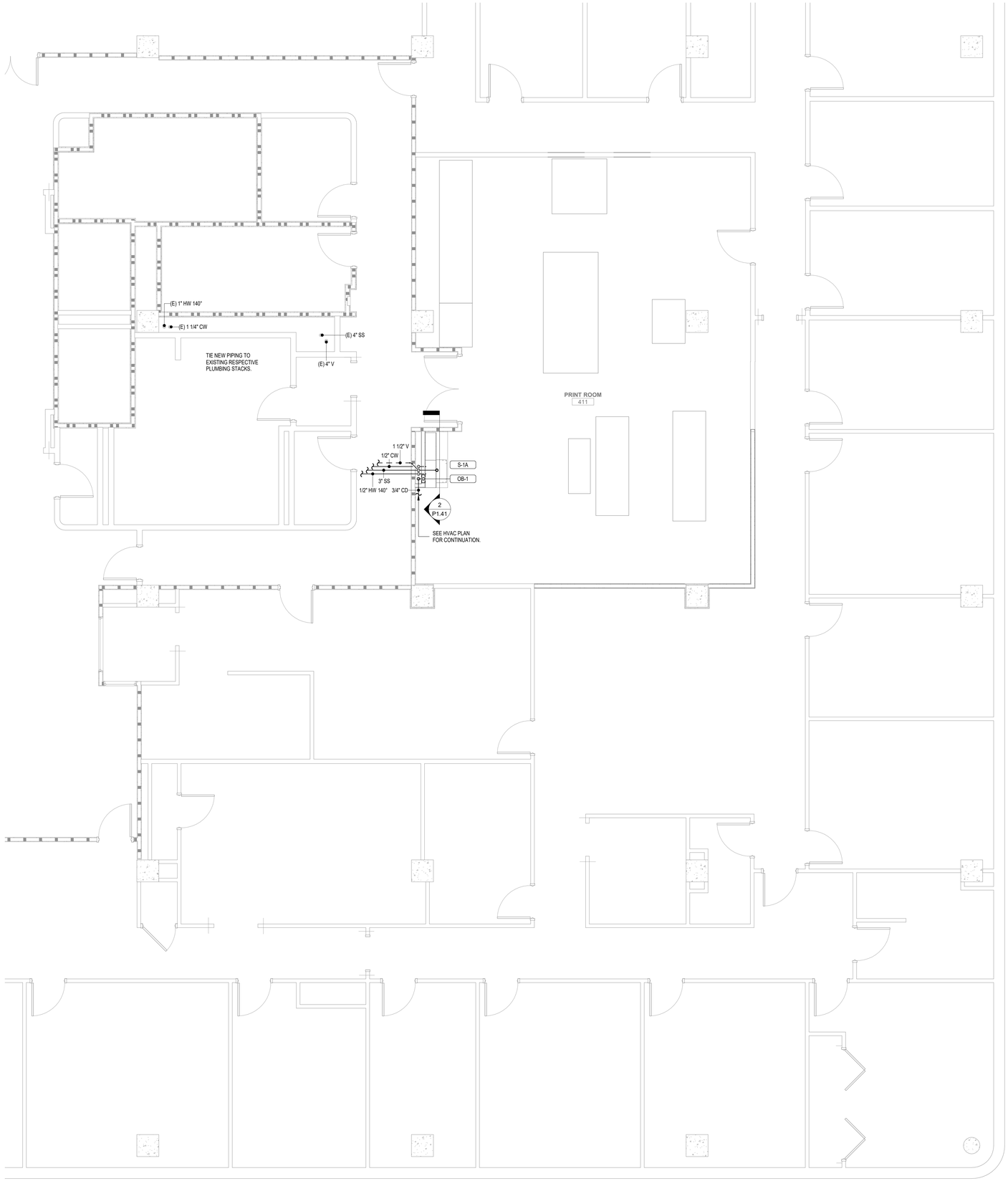

1 LEVEL 4 PLUMBING PLAN
1/4" = 1'-0"

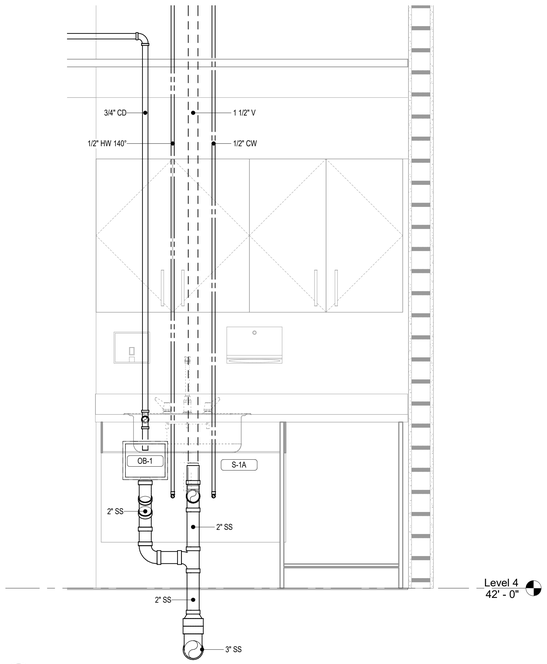

2 PLUMBING SECTION
1" = 1'-0"

TRUE NORTH
PROJECT NORTH

C:\Autodesk\Revit\2004800 - Mech - SC Education Lottery Upfit - Adjusted Scope - V19.2_cwilkes@ssoe.com.rvt :FILE PATH
10/20/2021 3:21:32 PM :PRINT DATE

PROFESSIONAL SEALS:

SOUTH CAROLINA SSOE, INC No. 746 CERTIFICATE OF AUTHORIZATION

SOUTH CAROLINA PROFESSIONAL ENGINEER NO. 25453 WESLEY G. BROWN 8/6/21

CONSULTANTS:

SUBMITTAL/REVISION SCHEDULE:

NO.	DATE	DESCRIPTION
	08.06.2021	CONSTRUCTION DOCUMENTS

■ APPROVED FOR CONSTRUCTION
□ NOT APPROVED FOR CONSTRUCTION

CLIENT INFORMATION:

SOUTH CAROLINA EDUCATION LOTTERY

CLIENT PROJECT #:	20048.00
SCEL PROJECT #:	Y20-N001-CB

PROJECT INFORMATION:

4TH FLOOR UPFIT

1333 MAIN STREET
COLUMBIA, SC 29201

SSOE/SW PROJECT #:	021-00531-00
SSOE/SW MANAGER:	WESLEY BROWN

SSOE | STEVENS & WILKINSON
1501 Main Street, Suite 730
Columbia, SC 29201
T. (803) 765-0320

THIS DRAWING IS THE PROPERTY OF SSOE | STEVENS & WILKINSON. UNAUTHORIZED USE OF ANY KIND, INCLUDING USE ON OTHER PROJECTS, IS PROHIBITED.

© SSOE, INC. 2021

LEVEL 4 PLUMBING PLAN

P1.41

PLUMBING FIXTURES

SYMBOL	DESCRIPTION	MANUFACTURER	MODEL	MATERIAL DESCRIPTION	TRIM					FLOW FIXTURE			FLUSH FIXTURE		PIPE CONNECTIONS				SPECIFICATIONS
					MANUFACTURER	MODEL	FINISH	TYPE	MOTION SENSOR CONTROL	FLOW	TIME DURATION	MAXIMUM MIXED WATER TEMPERATURE	VOLUME PER FLUSH	MINIMUM VOLUME PER FLUSH	SANITARY	VENT	COLD WATER	HOT WATER	
															ROUGH-IN PIPE DIAMETER	PIPE DIAMETER	ROUGH-IN PIPE DIAMETER	ROUGH-IN PIPE DIAMETER	
OB-1	OUTLET BOX	SIOUX CHIEF	696-3	WHITE ABS	N/A	N/A	N/A	N/A	N/A	N/A	N/A	N/A	N/A	N/A	2"	N/A	N/A	N/A	PROVIDE WITH SIOUX CHIEF 696-CF SECONDARY DRAINAGE FUNNEL FOR 1" AIR GAP. PROVIDE WITH MCGUIRE 8872 P-TRAP WITH 1-1/4" 17 GAUGE CHROME-PLATED BRASS ADJUSTABLE BODY. TIE TO SANITARY SEWER AFTER SINK P-TRAP WITHIN PLUMBING CHASE ABOVE FINISHED FLOOR.
S-1A	SINK - COUNTER MOUNT - ADA	ELKAY	LRADQ2521553	STAINLESS STEEL	T&S BRASS	B-2991-WA	CHROME	MANUAL	NO	2.2 GPM	N/A	110°F	N/A	N/A	2"	1 1/2"	1/2"	1/2"	PROVIDE WITH 8" CENTERSET FAUCET HOLES & 25"X21-1/4" RECTANGULAR-SHAPED BOWL. PROVIDE WITH 4" CHROME-PLATED METAL WRIST-ACTION HANDLES WITH RED & BLUE INDEXES FOR HOT & COLD WATER RESPECTIVELY. PROVIDE WITH APOLLO MVA34-LF THERMOSTATIC MIXING VALVE WITH INTEGRAL FILTER & CHECKS. PROVIDE WITH ELKAY LKAD35 BASKET STRAINER & OFFSET TAILPIECE WITH SUPPLIES & STOPS. PROVIDE WITH MCGUIRE 8872C P-TRAP WITH CLEANOUT PLUG & 1-1/4" 17 GAUGE CHROME-PLATED BRASS ADJUSTABLE BODY & ESCUTCHEON.

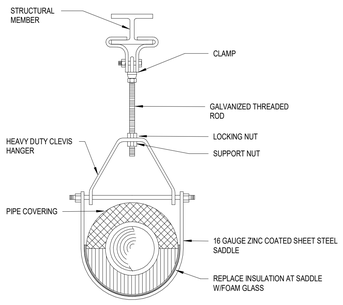

SIZE HANGER AND CLAMP TO ADEQUATELY SUPPORT LOAD (REFER TO MANUFACTURER'S GUIDELINES AND SPECIFICATIONS.)

1 PIPE HANGER
NOT TO SCALE

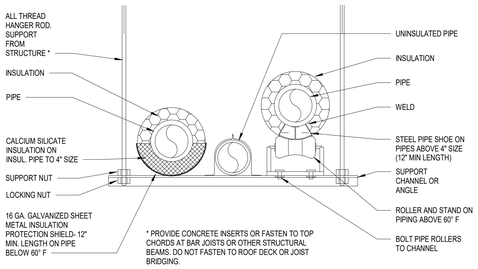

* PROVIDE CONCRETE INSERTS OR FASTEN TO TOP CHORDS AT BAR JOISTS OR OTHER STRUCTURAL BEAMS. DO NOT FASTEN TO ROOF DECK OR JOIST BRIDGING.

2 TRAPEZE PIPE HANGER
NOT TO SCALE

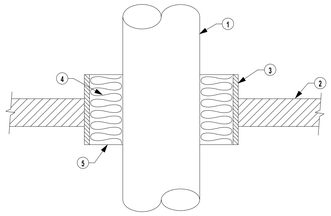

NOTES:

1. PIPES THRU FLOORS REQUIRE CONCRETE CURB NOT SHOWN.
2. FIRE WALL OR FLOOR PENETRATION, SEE SPECIFICATION FOR FIRE STOPPING AND ACOUSTICAL SEALANT.

LEGEND

1. PIPE
2. WALL, FLOOR, PARTITION, ETC.
3. STEEL PIPE SLEEVE
4. VOID SHALL BE PACKED ALL AROUND WITH MINERAL WOOL BATT.
5. SEAL EACH MINERAL WOOL SURFACE WITH NON-HARDENING SEALANT MINIMUM 1" DEPTH

3 PIPE THROUGH STRUCTURE
NOT TO SCALE

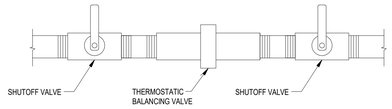

4 THERMOSTATIC BALANCING VALVE
NOT TO SCALE

SSOE
S&W

PROFESSIONAL SEALS:

SOUTH CAROLINA CERTIFICATE OF AUTHORIZATION SSOE, INC No. 746

SOUTH CAROLINA PROFESSIONAL ENGINEER NO. 25453 WESLEY G. BROWN 8/6/21

CONSULTANTS:

SUBMITTAL/REVISION SCHEDULE:

NO.	DATE	DESCRIPTION
	08.06.2021	CONSTRUCTION DOCUMENTS

■ APPROVED FOR CONSTRUCTION
□ NOT APPROVED FOR CONSTRUCTION

CLIENT INFORMATION:

SOUTH CAROLINA EDUCATION LOTTERY

South Carolina Education Lottery®

CLIENT PROJECT #:	20048.00
SCEL PROJECT #:	Y20-N001-CB

PROJECT INFORMATION:

4TH FLOOR UPFIT

1333 MAIN STREET
COLUMBIA, SC 29201

SSOE/SW PROJECT #:	021-00531-00
SSOE/SW MANAGER:	WESLEY BROWN

SSOE | STEVENS & WILKINSON
1501 Main Street, Suite 730
Columbia, SC 29201
T. (803) 765-0320

THIS DRAWING IS THE PROPERTY OF SSOE | STEVENS & WILKINSON. UNAUTHORIZED USE OF ANY KIND, INCLUDING USE ON OTHER PROJECTS, IS PROHIBITED.

© SSOE, INC. 2021

PLUMBING SCHEDULES & DETAILS

P4.01